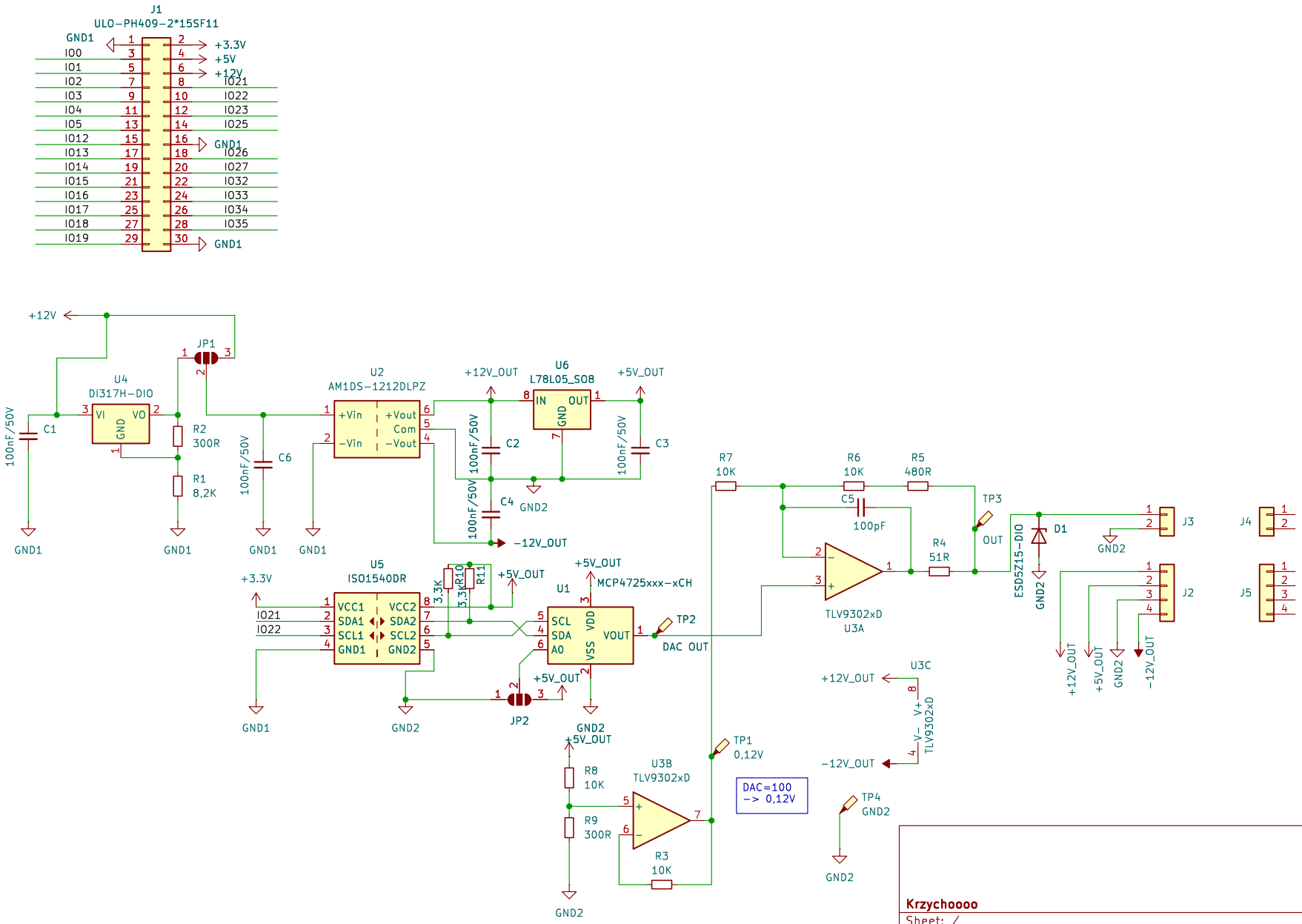

Krzychoooo

Sheet: /

File: out_0-10V.kicad_sch

Title: OUT_0-10V

Size: A4	Date: 2025-08-07	**Rev: 1.0.0**
KiCad E.D.A. 8.0.8		Id: 1/1