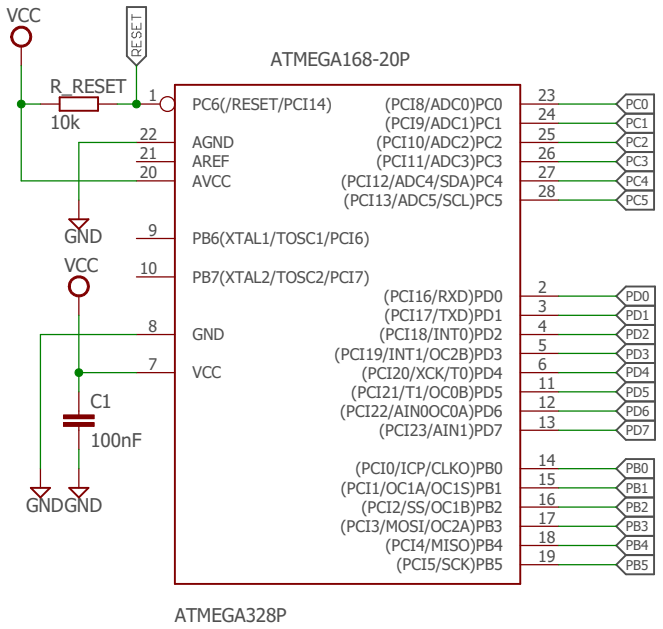
VCC
RESET
ATMEGA168-20P
R_RESET
10k
1
PC6(/RESET/PCI14)
(PCI8/ADC0)PC0
(PCI9/ADC1)PC1
(PCI10/ADC2)PC2
(PCI11/ADC3)PC3
(PCI12/ADC4/SDA)PC4
(PCI13/ADC5/SCL)PC5
22
21
20
AGND
AREF
AVCC
23
24
25
26
27
28
PC0
PC1
PC2
PC3
PC4
PC5
GND
9
PB6(XTAL1/TOSC1/PCI6)
VCC
10
PB7(XTAL2/TOSC2/PCI7)
(PCI16/RXD)PD0
(PCI17/TXD)PD1
(PCI18/INT0)PD2
(PCI19/INT1/OC2B)PD3
(PCI20/XCK/T0)PD4
(PCI21/T1/OC0B)PD5
(PCI22/AIN0OC0A)PD6
(PCI23/AIN1)PD7
8
GND
7
VCC
2
3
4
5
6
11
12
13
PD0
PD1
PD2
PD3
PD4
PD5
PD6
PD7
C1
100nF
GNDGND
(PCI0/ICP/CLKO)PB0
(PCI1/OC1A/OC1S)PB1
(PCI2/SS/OC1B)PB2
(PCI3/MOSI/OC2A)PB3
(PCI4/MISO)PB4
(PCI5/SCK)PB5
14
15
16
17
18
19
PB0
PB1
PB2
PB3
PB4
PB5
ATMEGA328P

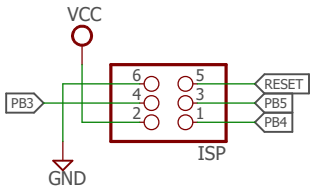
VCC
PB3
6
4
2
5
3
1
RESET
PB5
PB4
ISP
GND

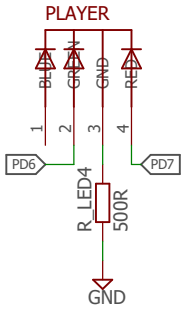
PLAYER
BLUE
GREEN
GND
RED
1
2
3
4
PD6
PD7
R_LED4
500R
GND

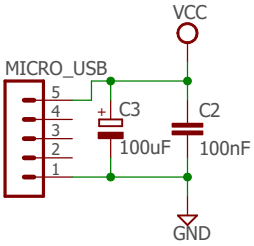
VCC
MICRO_USB
5
4
3
2
1
C3
100uF
C2
100nF
GND

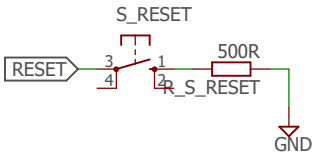
S_RESET
RESET
3
4
1
2
500R
R_S_RESET
GND

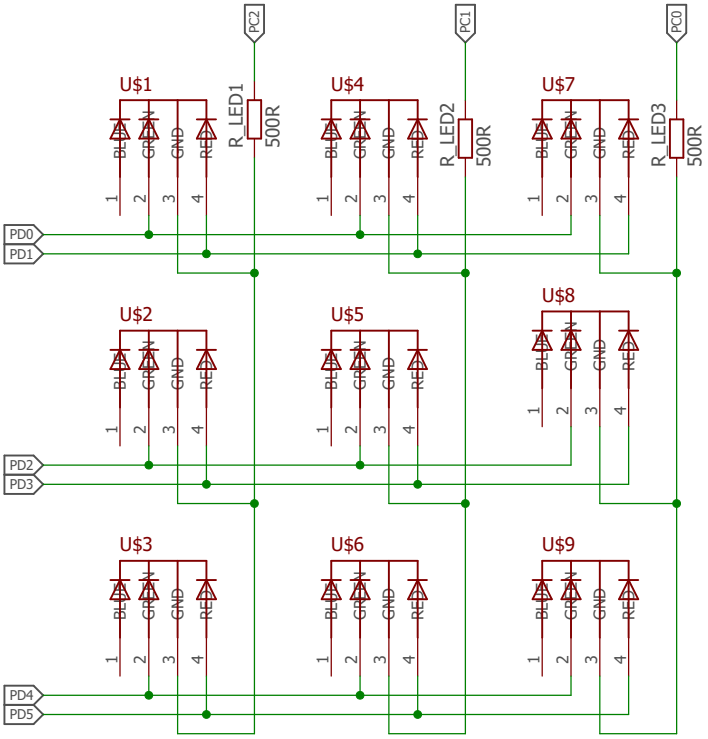
PC2
PC1
PC0
U$1
U$4
U$7
R_LED1
R_LED2
R_LED3
500R
BLU
GRN
GND
RED
1
2
3
4
PD0
PD1
U$2
U$5
U$8
PD2
PD3
U$3
U$6
U$9
PD4
PD5

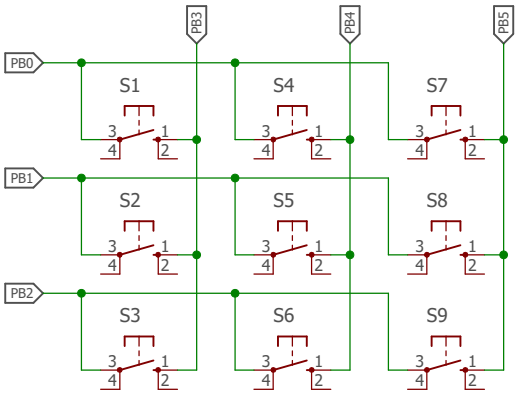
PB3
PB4
PB5
PB0
PB1
PB2
S1
S4
S7
S2
S5
S8
S3
S6
S9
1
2
3
4