HV Input

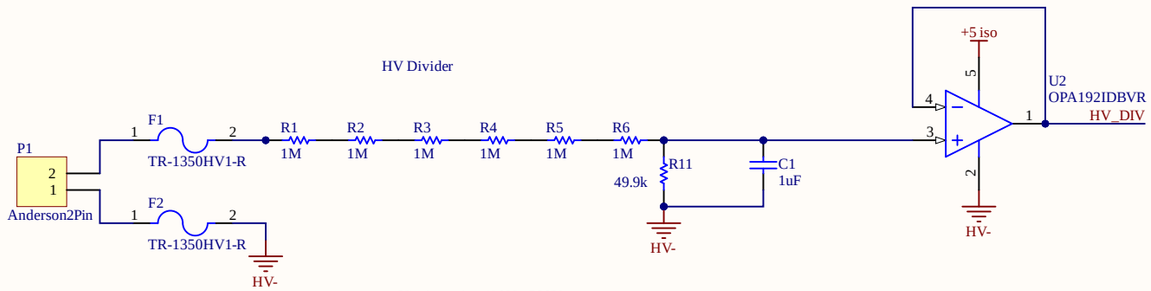

Vin (range) = 420V - 588V
Vout = (49.9k / (6M + 49.9k)) * Vin
Vout (max) = 4.85V
Vout (min) = 3.47V

ADC + I2C Isolation/Level Shift

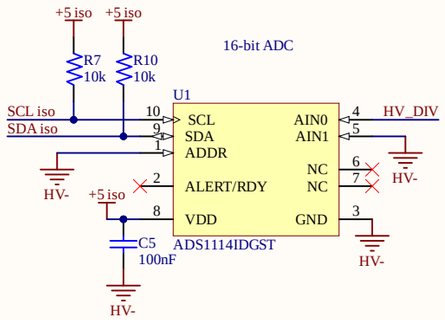

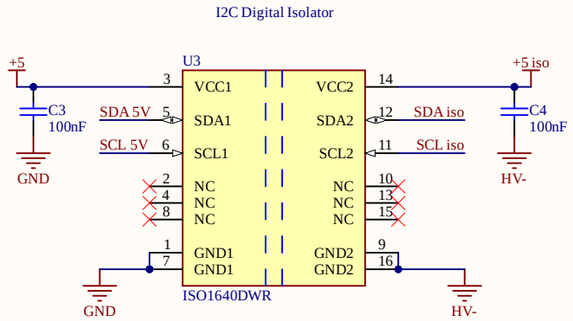

Connector Out

Connector for Power and Current Sense Outputs

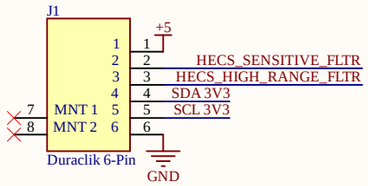

5V to 3V3 Level Shifter (integrated pull-ups)

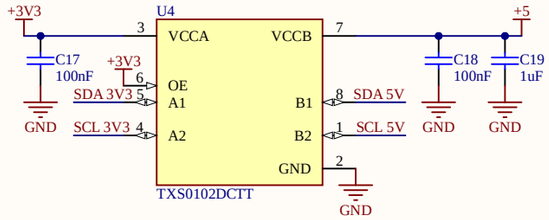

Current Sensing

High Range Current Sensor (5V)

Datasheet recommends grounding NC and Test pins

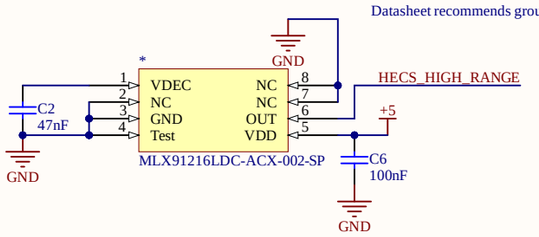

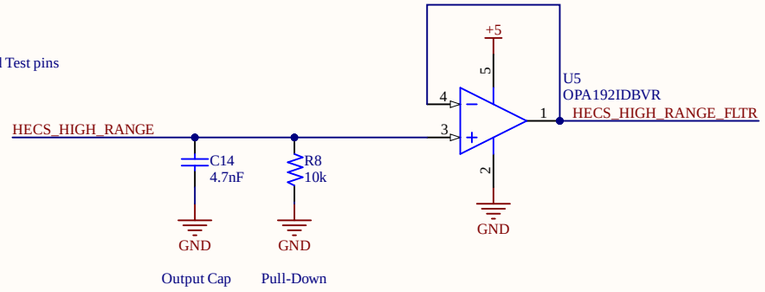

Use MLX91216LDC-ACX-002-SP variant of IC (footprints identical)

High Sensitivity Current Sensor (3V3)

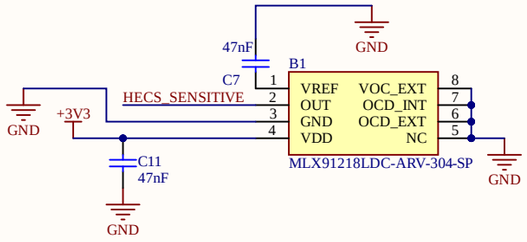

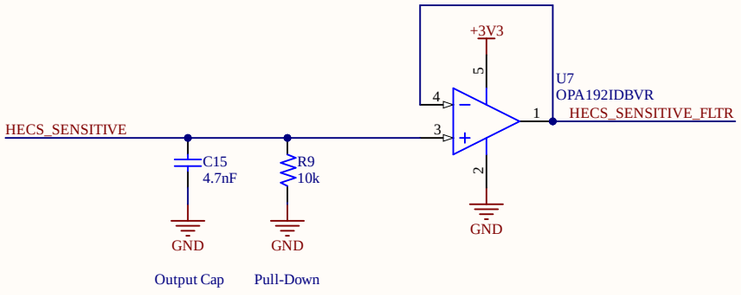

Use MLX91218LDC-ARV-304-SP variant of IC (footprints identical)

Power

Isolated 5V Power for HV Island (DC/DC)

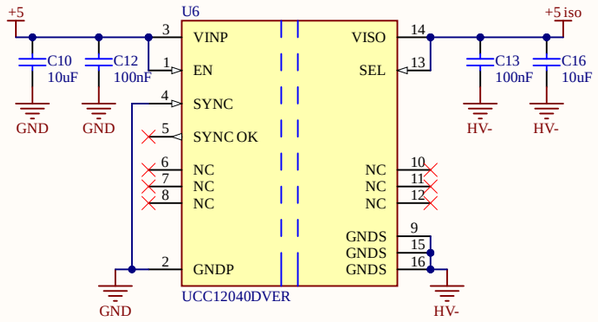

LV Power Step-Down to 3V3 (LDO)

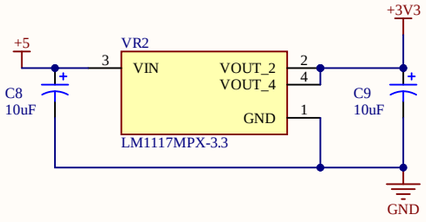

Title		
Size A3	Number	Revision
Date: 4/22/2026		Sheet of
File: Sheet1.SchDoc		Drawn By: