Power

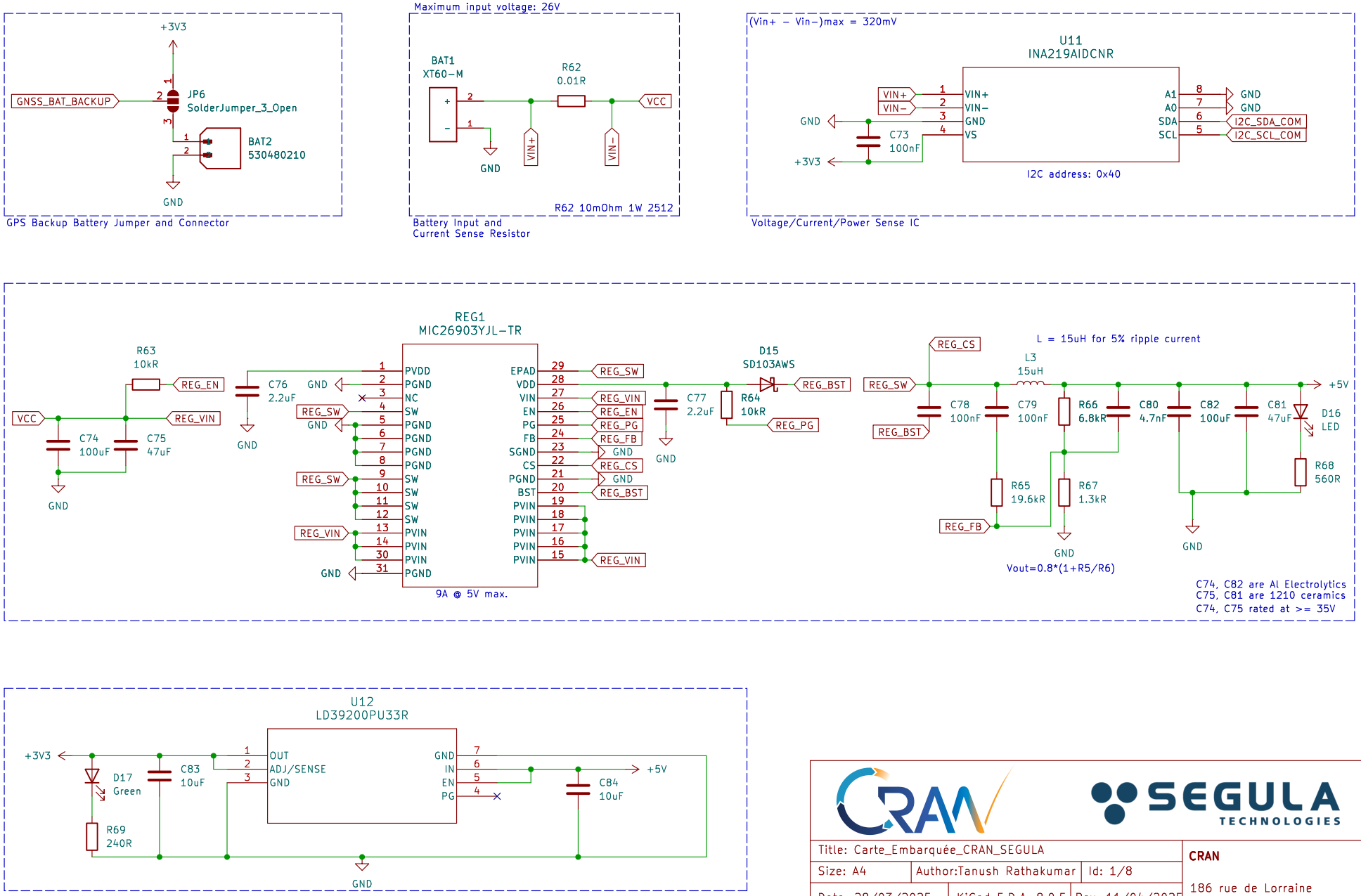

Title: Carte_Embarquée_CRAN_SEGULA		CRAN
Size: A4	Author:Tanush Rathakumar	Id: 1/8
Date: 28/03/2025	KiCad E.D.A. 8.0.5	Rev: 11/04/2025
File: Card_CRAN_SEGULA.kicad_sch		186 rue de Lorraine 54400 Cosnes et Romain

Navigation MCU

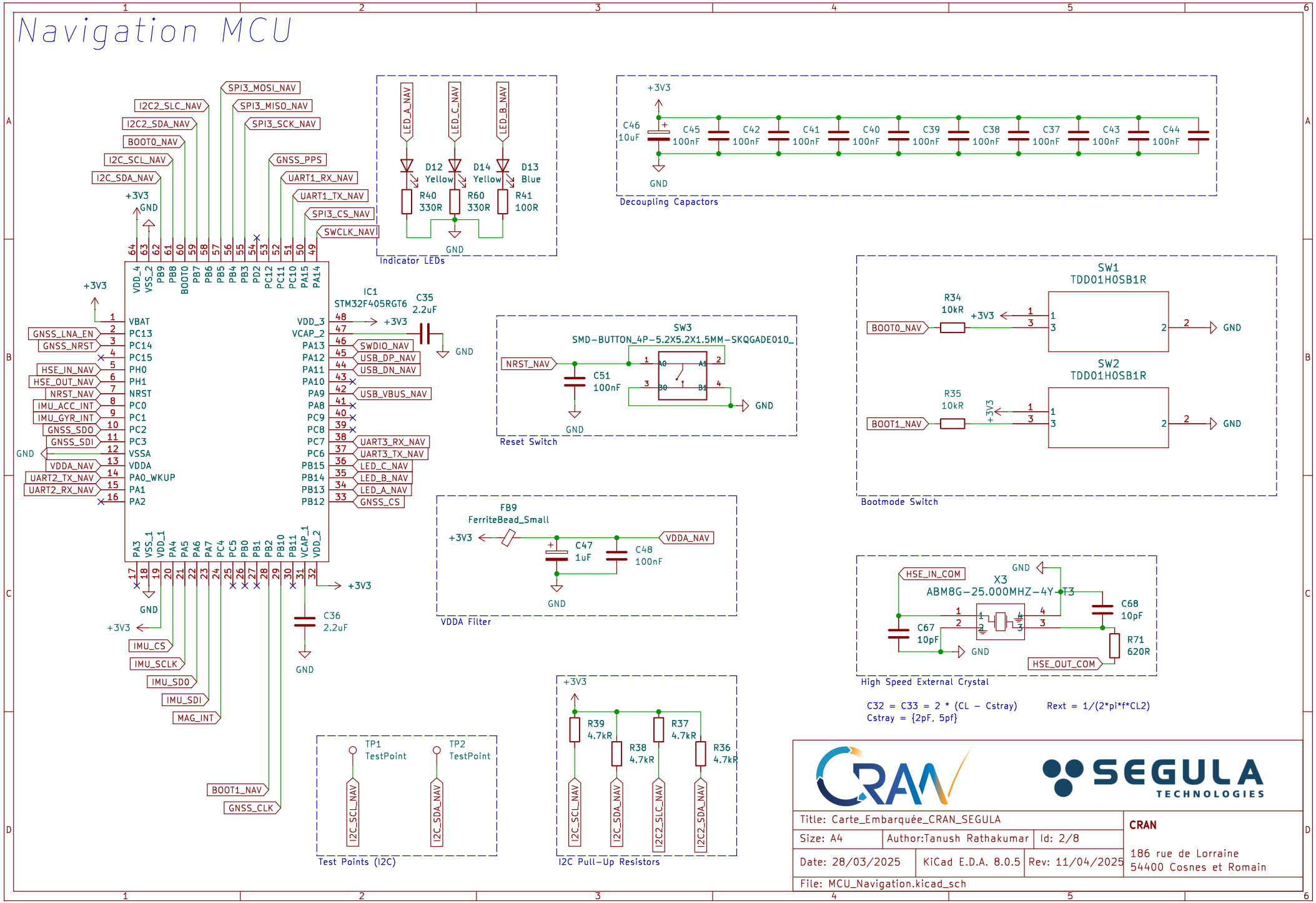

Peripherique NAV

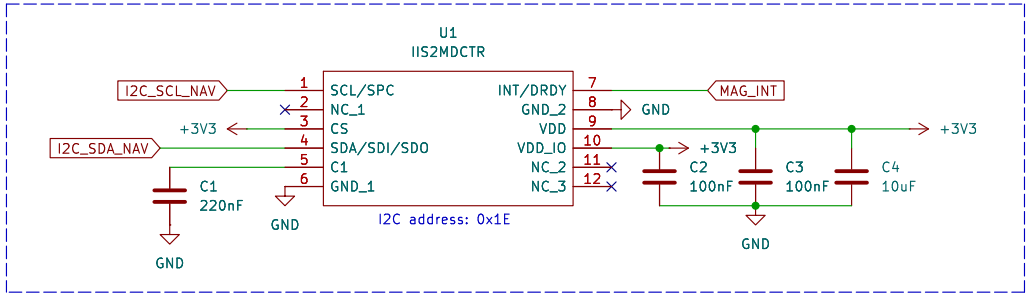

Magnetometer

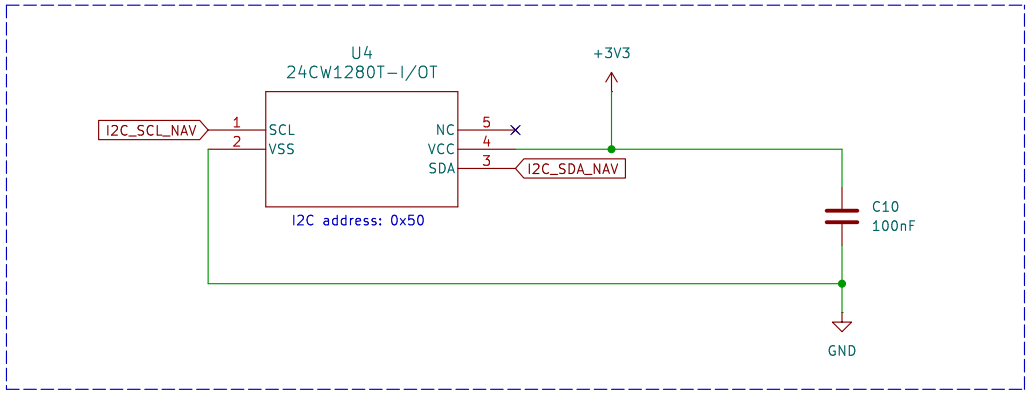

EEPROM

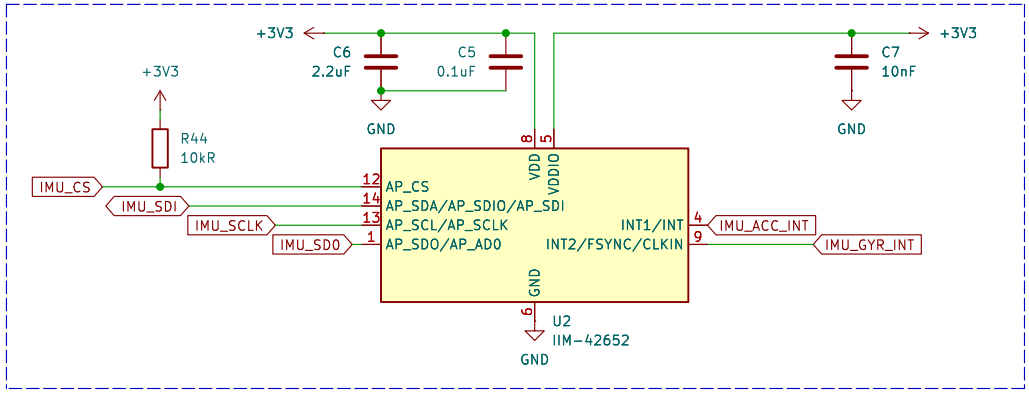

IMU(Accelerometer + Gyroscope)

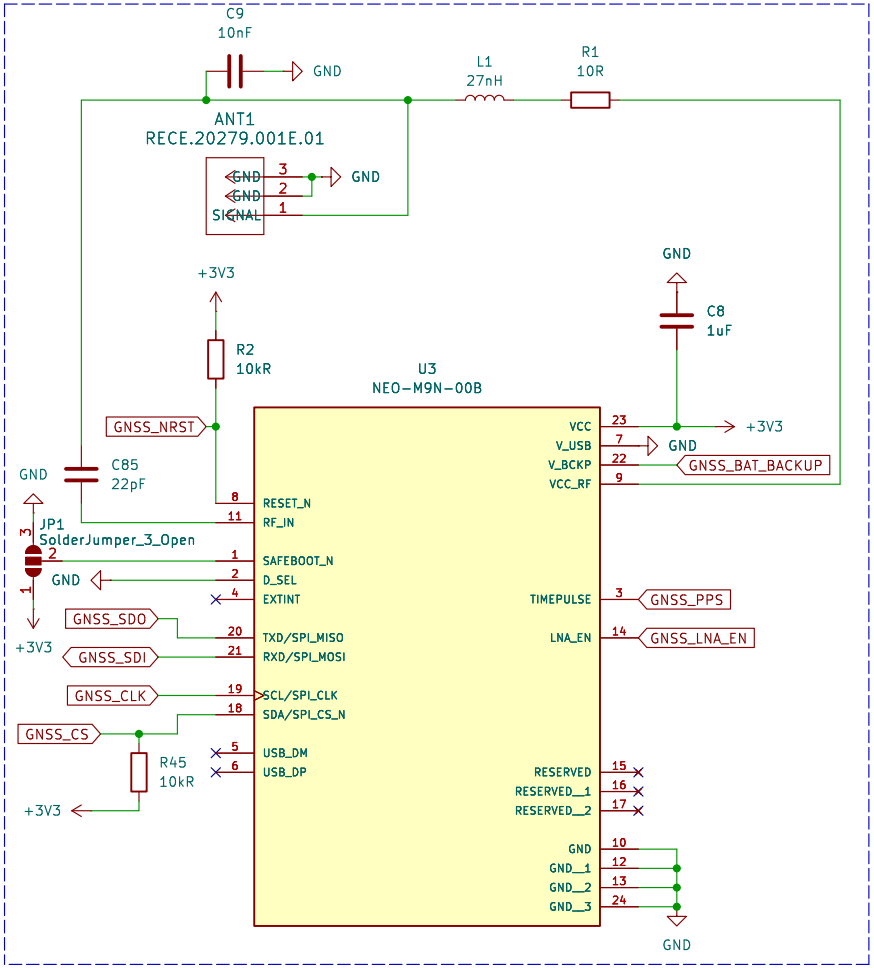

GPS (Receiver + ULF Antenna Connector)

Title: Carte_Embarquée_CRAN_SEGULA		CRAN
Size: A4	Author:Tanush Rathakumar	Id: 3/8
Date: 28/03/2025	KiCad E.D.A. 8.0.5	Rev: 11/04/2025
File: Navigation_Peripherique.kicad_sch		186 rue de Lorraine 54400 Cosnes et Romain

Communication MCU

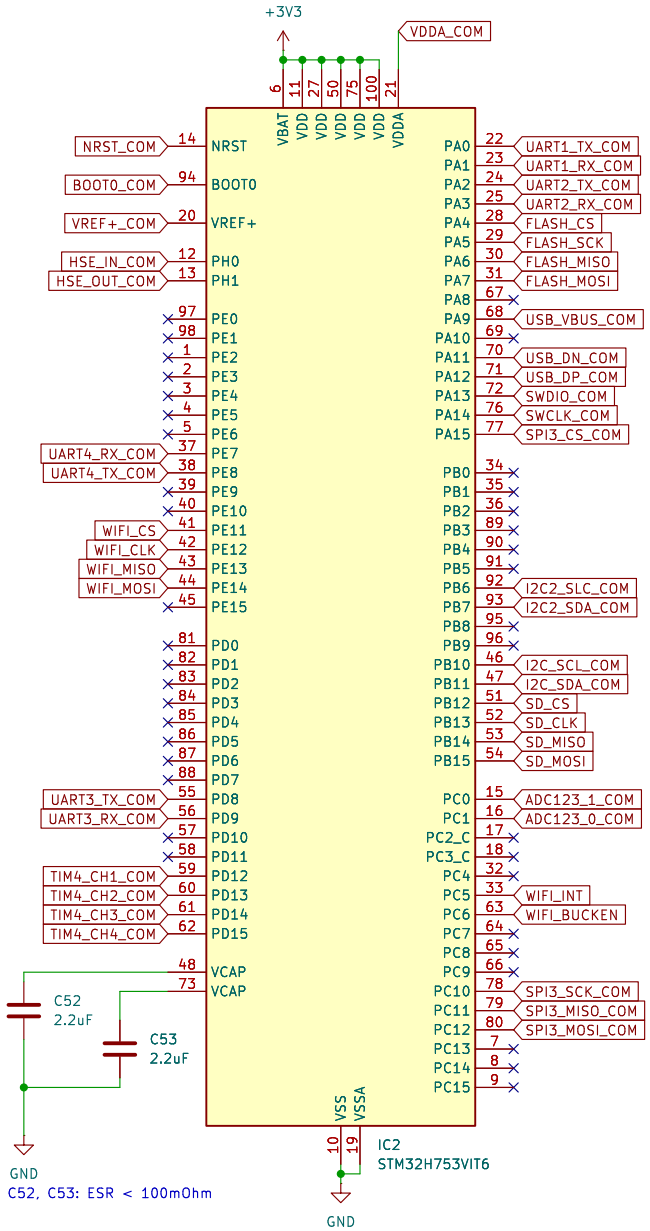

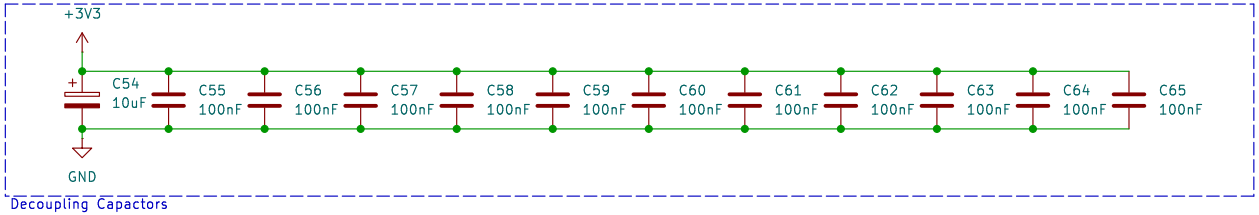

Decoupling Capacitors

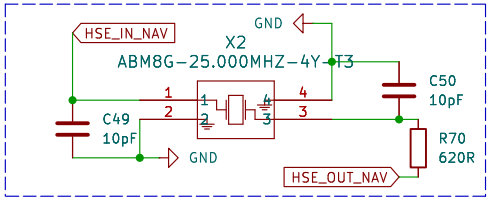

High Speed External Crystal

C32 = C33 = 2 * (CL − Cstray) Rext = 1/(2*pi*f*CL2)
Cstray = {2pF, 5pf}

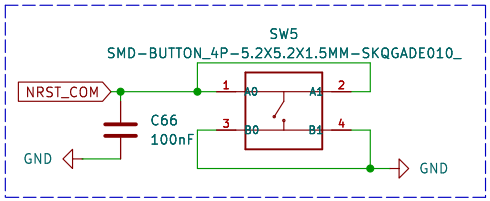

Reset Switch

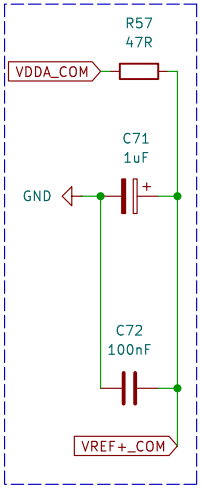

VREF+ Filter

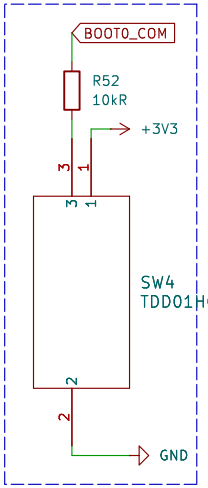

Bootmode Switch

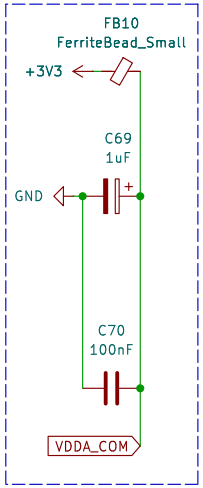

VDDA Filter

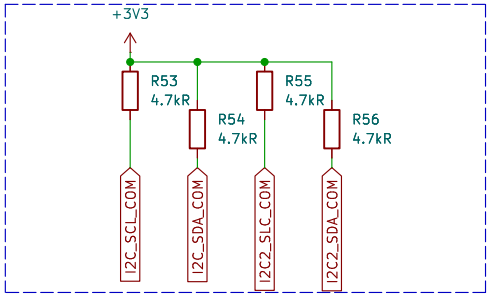

I2C Pull-Up Resistors

Test Points (I2C)

Title: Carte_Embarquée_CRAN_SEGULA		CRAN
Size: A4	Author:Tanush Rathakumar	Id: 4/8
Date: 28/03/2025	KiCad E.D.A. 8.0.5	Rev: 11/04/2025
File: MCU_Communication.kicad_sch		186 rue de Lorraine 54400 Cosnes et Romain

Peripherique COM

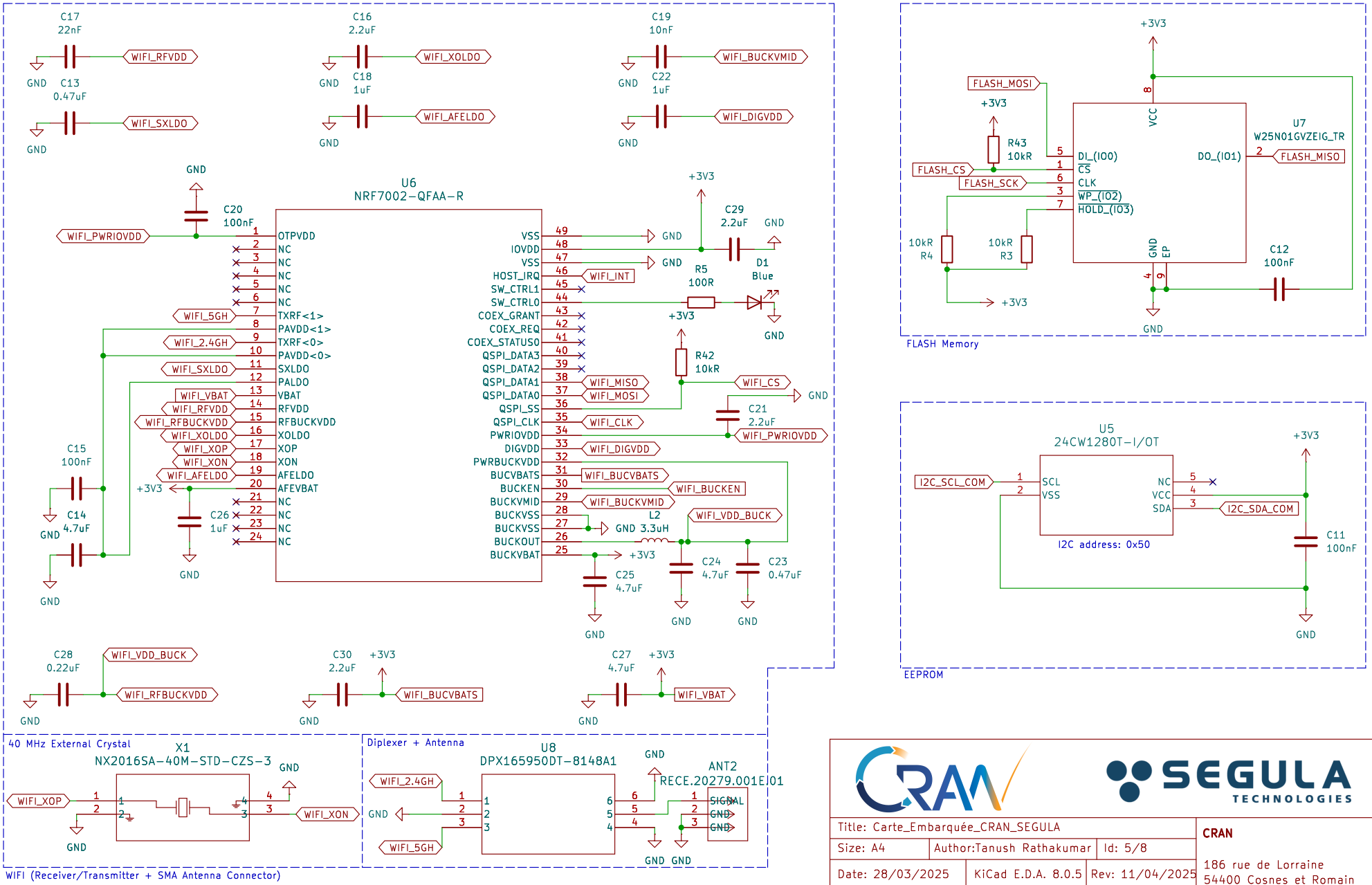

Title: Carte_Embarquée_CRAN_SEGULA		CRAN
Size: A4	Author:Tanush Rathakumar	Id: 5/8
Date: 28/03/2025	KiCad E.D.A. 8.0.5	Rev: 11/04/2025
File: Communication_Peripherique.kicad_sch		186 rue de Lorraine 54400 Cosnes et Romain

Connectors (Programming, Debug & Data storage/transfert)

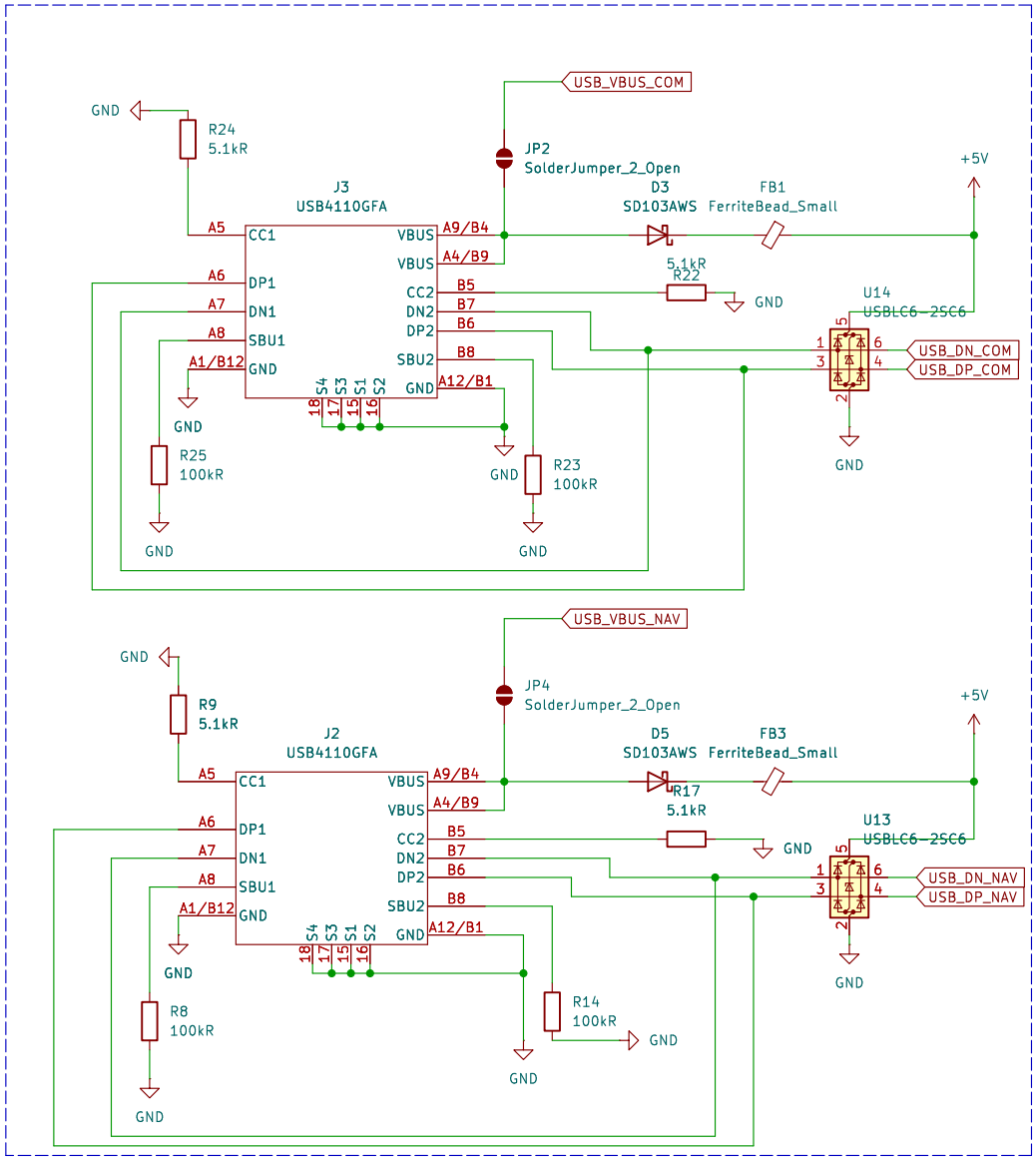

USB C Programming & Data transmitter

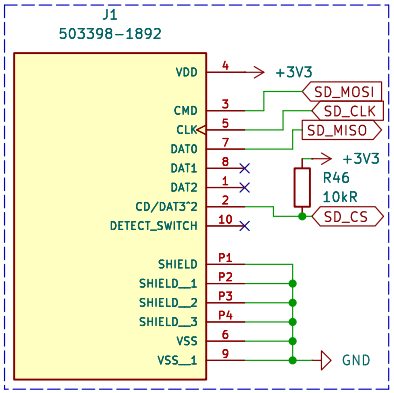

Micro SD card slot (Data storage)

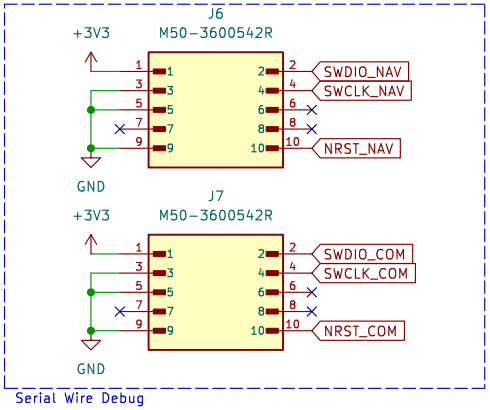

Serial Wire Debug

Title: Carte_Embarquée_CRAN_SEGULA			CRAN
Size: A4	Author:Tanush Rathakumar	Id: 6/8	186 rue de Lorraine 54400 Cosnes et Romain
Date: 28/03/2025	KiCad E.D.A. 8.0.5	Rev: 11/04/2025	
File: Connections.kicad_sch			

Connectors (USB Debug)

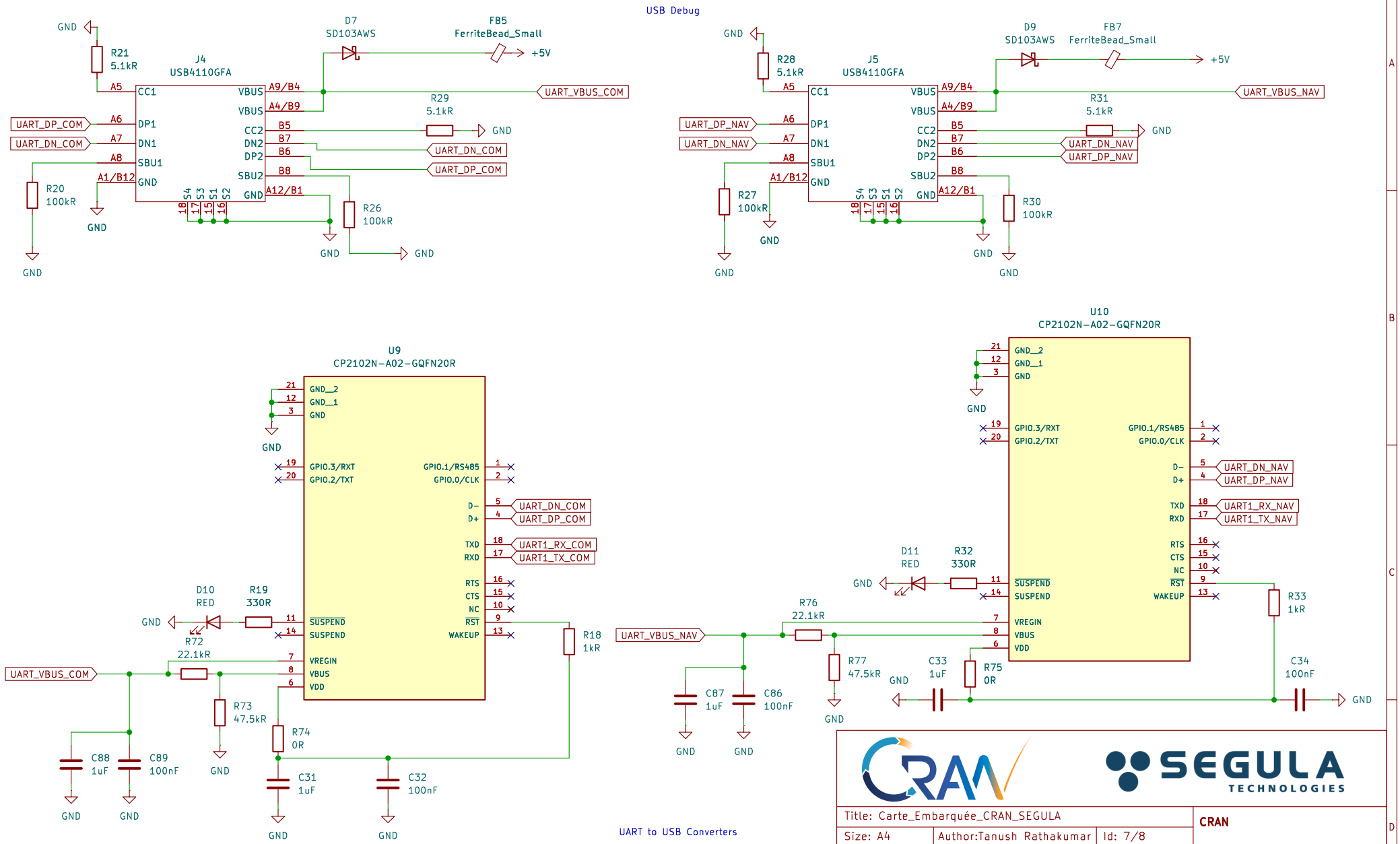

Title: Carte_Embarquée_CRAN_SEGULA		CRAN
Size: A4	Author:Tanush Rathakumar	Id: 7/8
Date: 28/03/2025	KiCad E.D.A. 8.0.5	Rev: 11/04/2025
File: Connections_2_sch.kicad_sch		186 rue de Lorraine 54400 Cosnes et Romain

Connectors (Additional peripherals + Mounting + (NAV <-> COM))

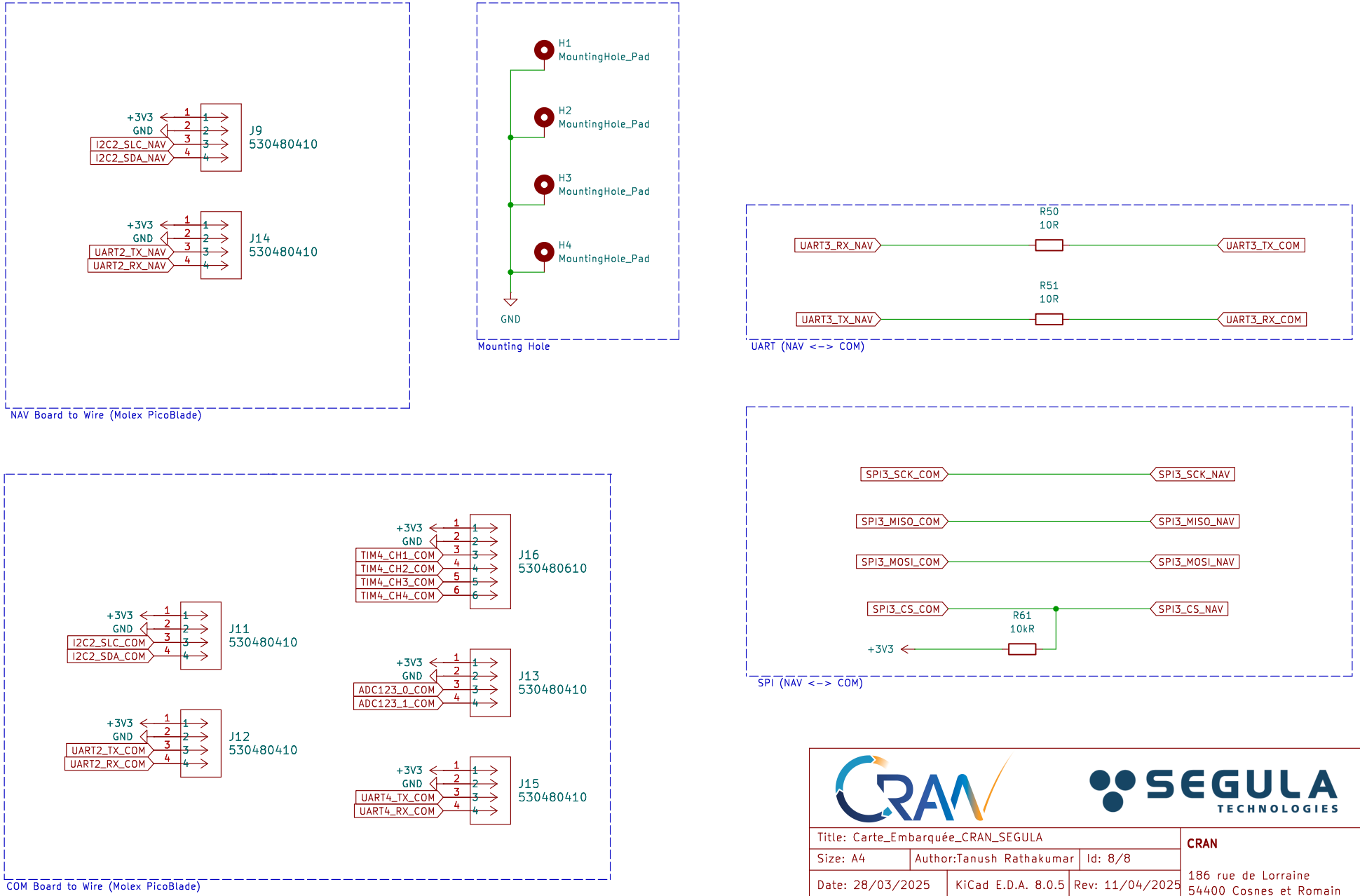

Title: Carte_Embarquée_CRAN_SEGULA		CRAN
Size: A4	Author:Tanush Rathakumar	Id: 8/8
Date: 28/03/2025	KiCad E.D.A. 8.0.5	Rev: 11/04/2025
File: Connections_3_sch.kicad_sch		186 rue de Lorraine 54400 Cosnes et Romain