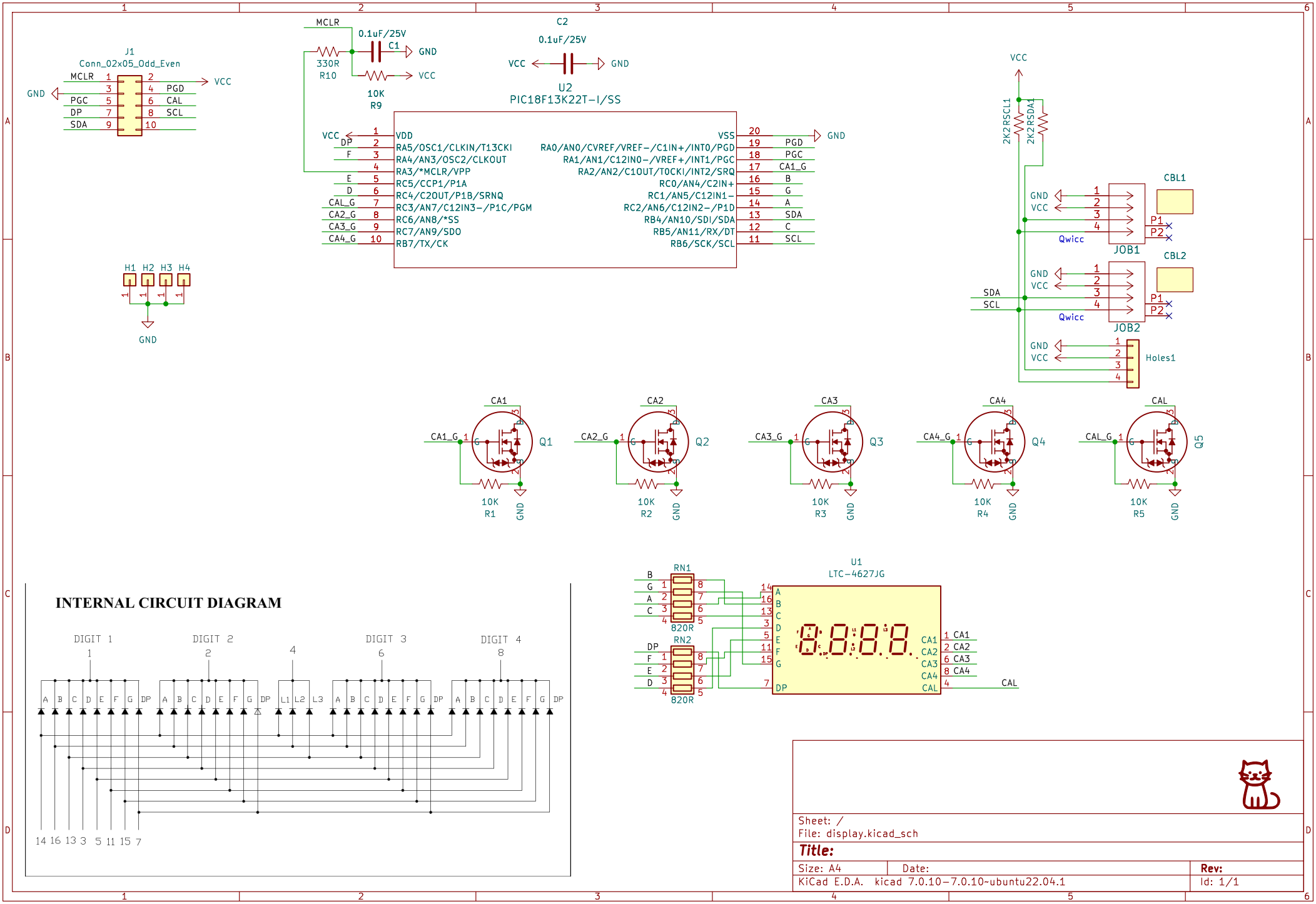

Sheet: /
File: display.kicad_sch

Title:

Size: A4	Date:	Rev:
KiCad E.D.A. kicad 7.0.10-7.0.10~ubuntu22.04.1		Id: 1/1