# Lecture 10 – Equivalence and Minimization of Finite Automata

COSE215: Theory of Computation

Jihyeok Park

PLRG

2026 Spring

# Recall

- Closure Properties of Regular Languages
- Pumping Lemma for Regular Languages

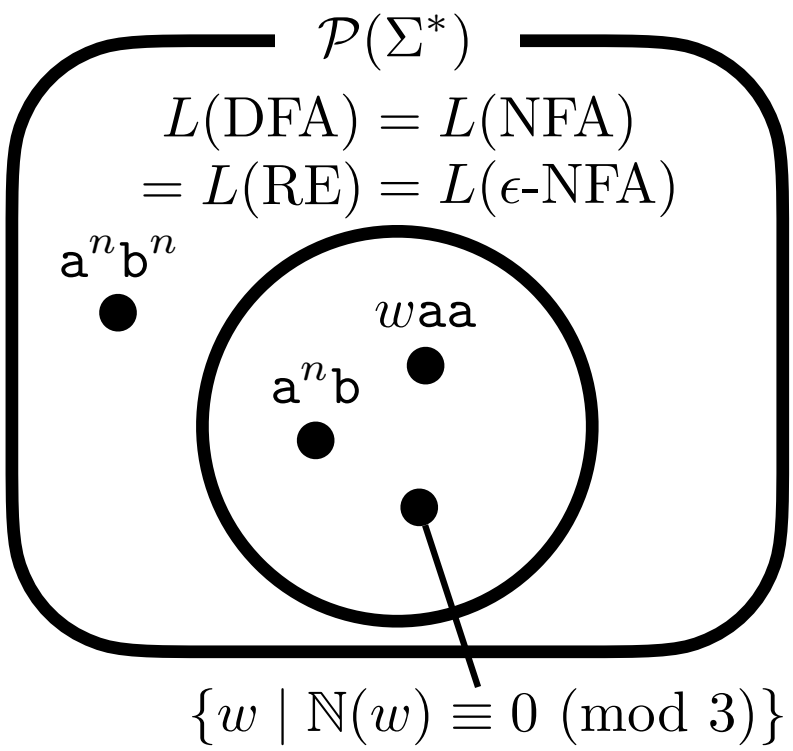


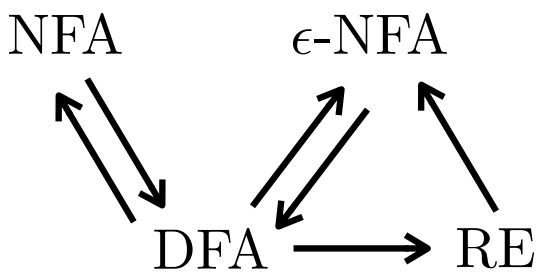

# Recall

- Closure Properties of Regular Languages
- Pumping Lemma for Regular Languages

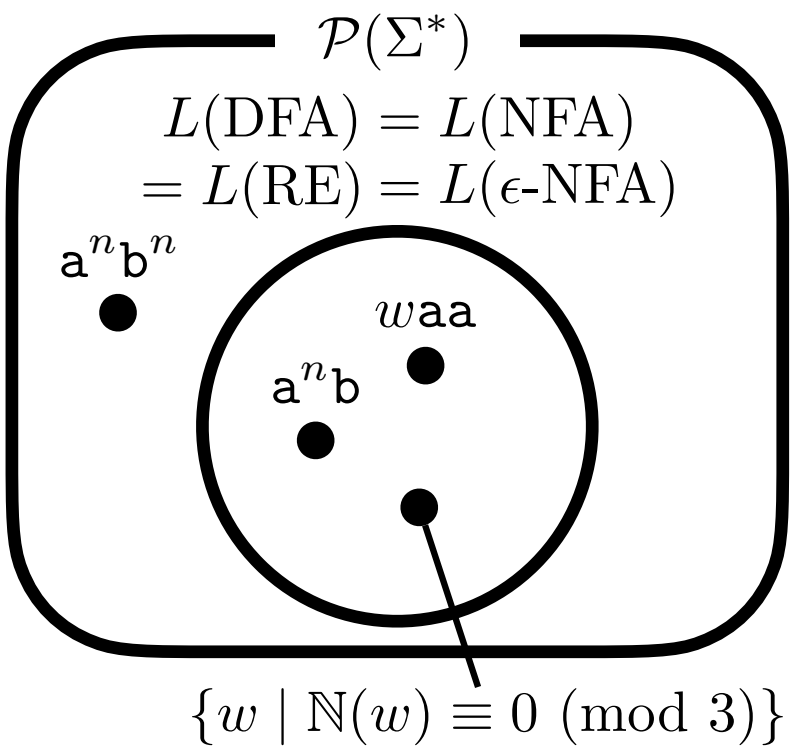


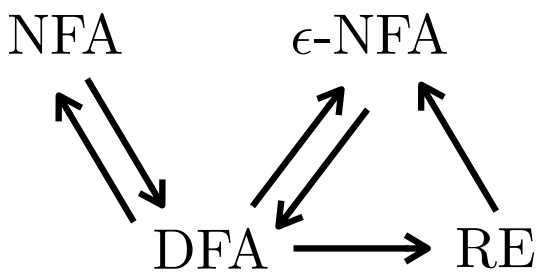


- How to test whether two finite automata are **equivalent**?

# Recall

- Closure Properties of Regular Languages
- Pumping Lemma for Regular Languages

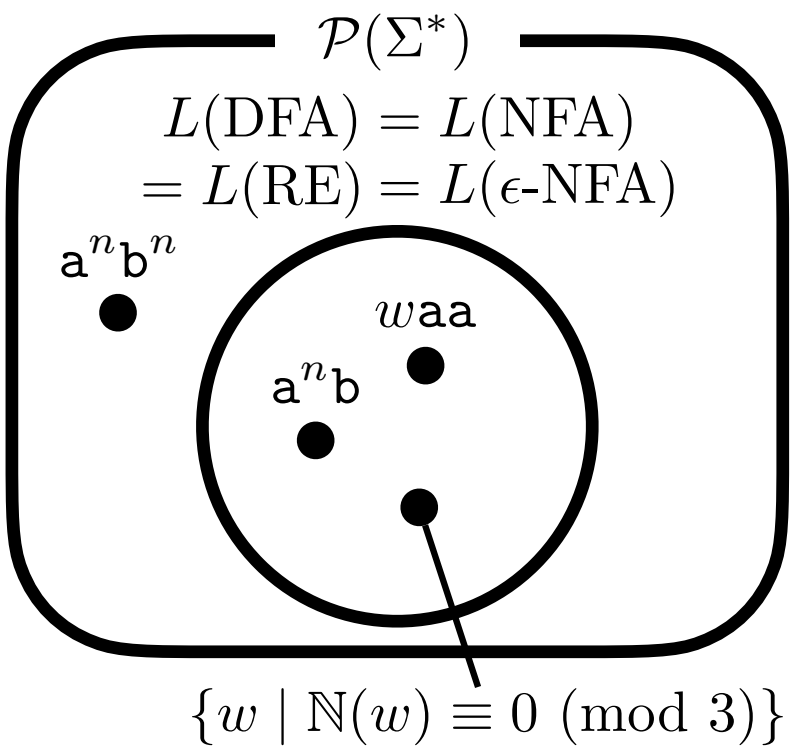


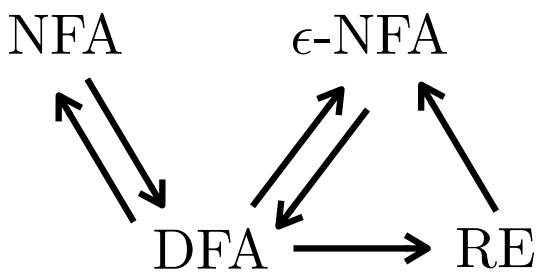


- How to test whether two finite automata are **equivalent**?
- How to **minimize** a finite automaton?

# Contents

1. Equivalence of Finite Automata
   - Equivalence of States ($\equiv$)
   - Distinguishable States ( $\not\equiv$ )
   - Table-Filling Algorithm
   - Equivalence of Finite Automata
   - Examples

2. Minimization of Finite Automata
   - Minimization Algorithm
   - Examples
   - Proof of Minimum-State DFA

# Contents

1. Equivalence of Finite Automata
   - Equivalence of States ($\equiv$)
   - Distinguishable States ( $\not\equiv$ )
   - Table-Filling Algorithm
   - Equivalence of Finite Automata
   - Examples

2. Minimization of Finite Automata
   - Minimization Algorithm
   - Examples
   - Proof of Minimum-State DFA

# Equivalence of Finite Automata

- Are the following two DFA **equivalent** (i.e., $L(D_0) = L(D_1)$)?

$D_0 =$

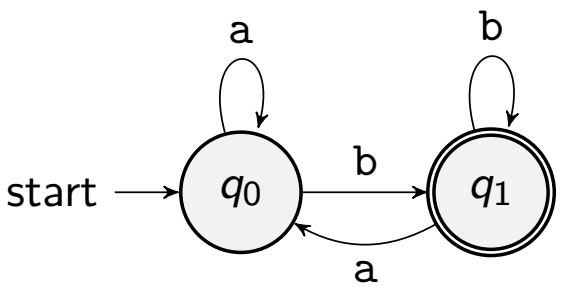


$D_1 =$

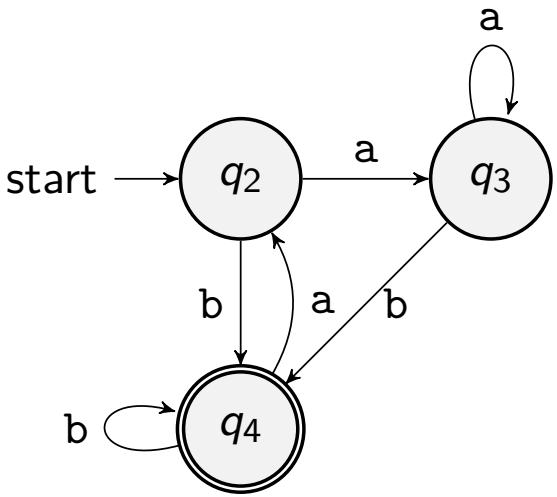

# Equivalence of Finite Automata

- Are the following two DFA **equivalent** (i.e., $L(D_0) = L(D_1)$)?

$D_0 =$

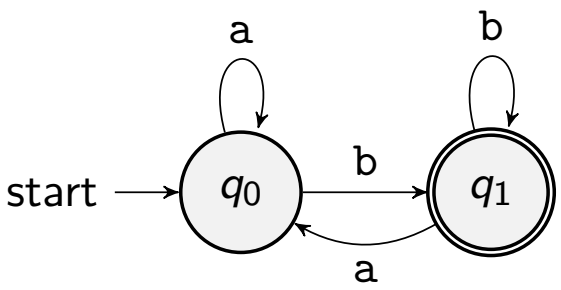


$D_1 =$

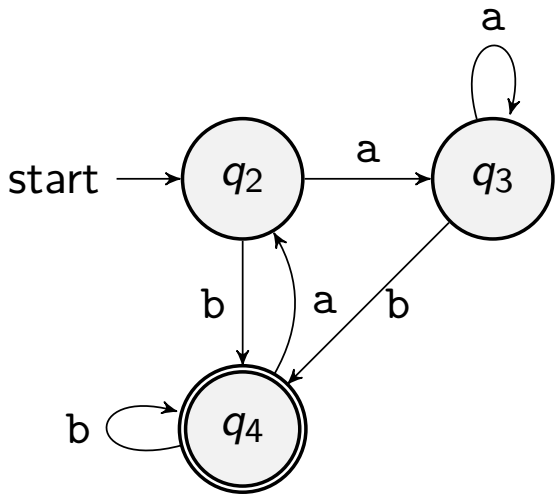


- Yes, because $L(D_0) = L(D_1) = \{w\mathtt{b} \mid w \in \{\mathtt{a}, \mathtt{b}\}^*\}$.

# Equivalence of Finite Automata

- Are the following two DFA **equivalent** (i.e., $L(D_0) = L(D_1)$)?

$D_0 =$

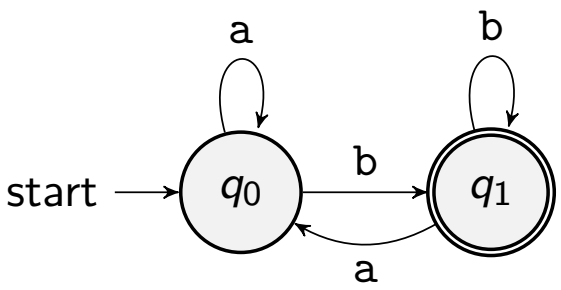


$D_1 =$

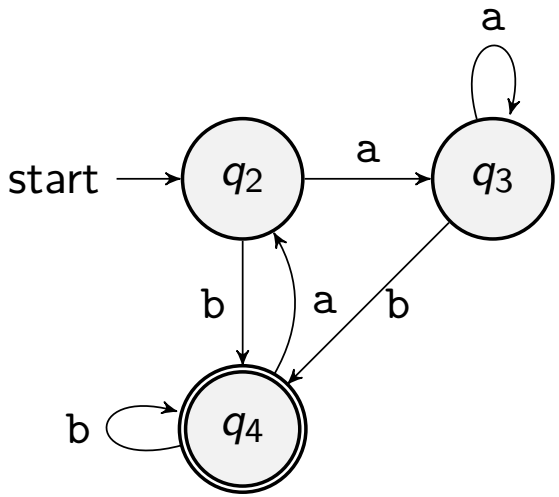


- Yes, because $L(D_0) = L(D_1) = \{w\mathtt{b} \mid w \in \{\mathtt{a}, \mathtt{b}\}^*\}$.
- We first define the **equivalence of states** and utilize it to test the **equivalence of DFA**.

# Equivalence of States ($\equiv$)

PLRG

## Definition (Equivalence of States ($\equiv$))

For a given DFA $D$, $q_i$ is **equivalent** to $q_j$ (i.e., $q_i \equiv q_j$) if and only if

$$\forall w \in \Sigma^*.\ \delta^*(q_i, w) \in F \iff \delta^*(q_j, w) \in F$$

# Equivalence of States ($\equiv$)

## Definition (Equivalence of States ($\equiv$))

For a given DFA $D$, $q_i$ is **equivalent** to $q_j$ (i.e., $q_i \equiv q_j$) if and only if

$$\forall w \in \Sigma^*.\ \delta^*(q_i, w) \in F \iff \delta^*(q_j, w) \in F$$

$$q_i \equiv q_j \iff \forall w \in \Sigma^*.$$

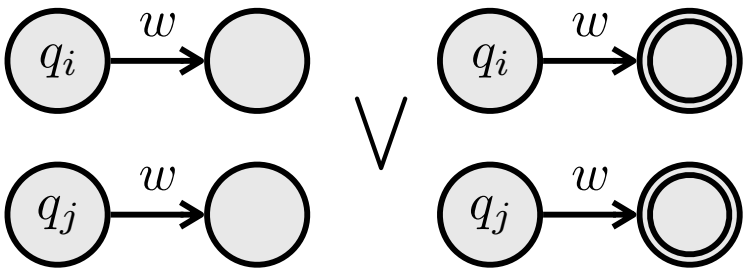

# Equivalence of States ($\equiv$)

## Definition (Equivalence of States ($\equiv$))

For a given DFA $D$, $q_i$ is **equivalent** to $q_j$ (i.e., $q_i \equiv q_j$) if and only if

$$\forall w \in \Sigma^*.\ \delta^*(q_i, w) \in F \iff \delta^*(q_j, w) \in F$$

$$q_i \equiv q_j \iff \forall w \in \Sigma^*.$$

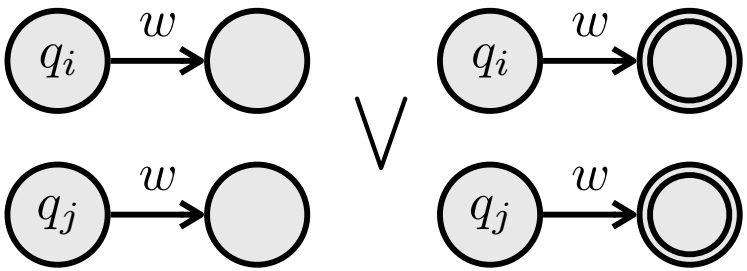


However, it is difficult to make it as an algorithm.

# Equivalence of States ($\equiv$)

## Definition (Equivalence of States ($\equiv$))

For a given DFA $D$, $q_i$ is **equivalent** to $q_j$ (i.e., $q_i \equiv q_j$) if and only if

$$\forall w \in \Sigma^*.\ \delta^*(q_i, w) \in F \iff \delta^*(q_j, w) \in F$$

$$q_i \equiv q_j \iff \forall w \in \Sigma^*.$$

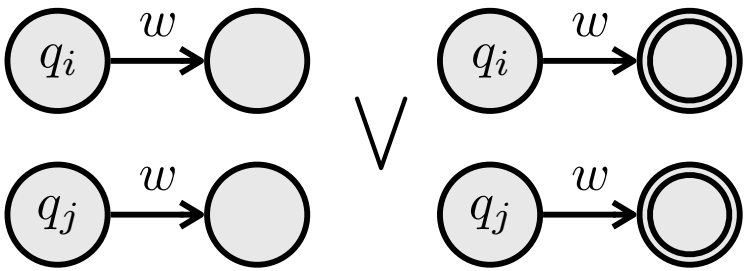


However, it is difficult to make it as an algorithm. Let's consider $q_i \not\equiv q_j$:

# Equivalence of States ($\equiv$)

## Definition (Equivalence of States ($\equiv$))

For a given DFA $D$, $q_i$ is **equivalent** to $q_j$ (i.e., $q_i \equiv q_j$) if and only if

$$\forall w \in \Sigma^*.\ \delta^*(q_i, w) \in F \iff \delta^*(q_j, w) \in F$$

$$q_i \equiv q_j \iff \forall w \in \Sigma^*.$$

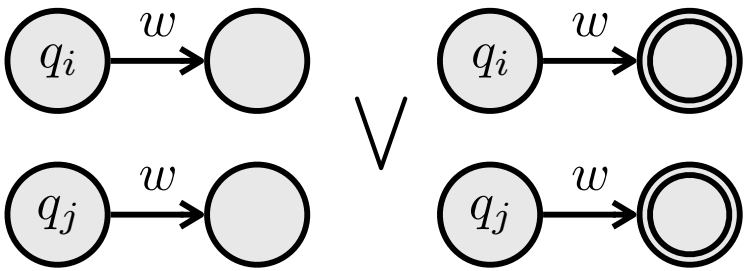


However, it is difficult to make it as an algorithm. Let's consider $q_i \not\equiv q_j$:

$$q_i \not\equiv q_j \iff \exists w \in \Sigma^*.\ (\delta^*(q_i, w) \in F \iff \delta^*(q_j, w) \notin F)$$

# Equivalence of States ($\equiv$)

## Definition (Equivalence of States ($\equiv$))

For a given DFA $D$, $q_i$ is **equivalent** to $q_j$ (i.e., $q_i \equiv q_j$) if and only if

$$\forall w \in \Sigma^*.\ \delta^*(q_i, w) \in F \iff \delta^*(q_j, w) \in F$$

$$q_i \equiv q_j \iff \forall w \in \Sigma^*.$$

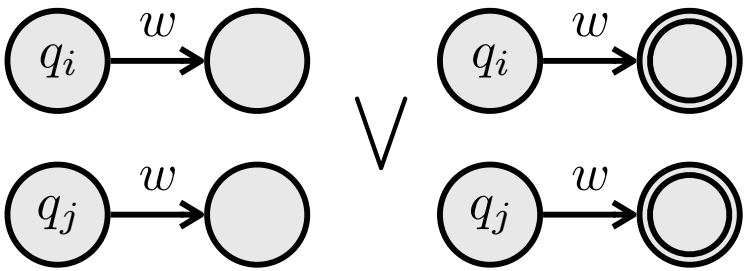


However, it is difficult to make it as an algorithm. Let's consider $q_i \not\equiv q_j$:

$$q_i \not\equiv q_j \iff \exists w \in \Sigma^*.\ (\delta^*(q_i, w) \in F \iff \delta^*(q_j, w) \notin F)$$

$$q_i \not\equiv q_j \iff \exists w \in \Sigma^*.$$

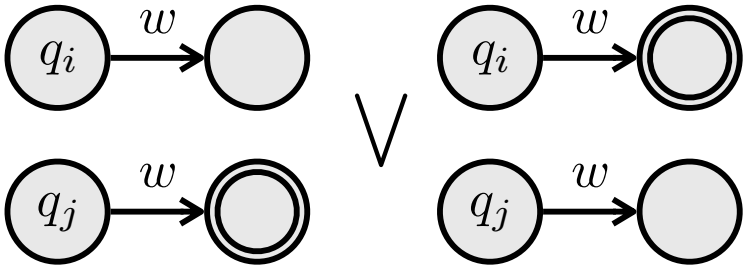

# Distinguishable States ( $\not\equiv$ )

We can *inductively* test $q_i$ is **distinguishable** with $q_j$ (i.e., $q_i \not\equiv q_j$):

- **(Basis Case)** $w = \epsilon$

# Distinguishable States ( $\not\equiv$ )

We can *inductively* test $q_i$ is **distinguishable** with $q_j$ (i.e., $q_i \not\equiv q_j$):

- **(Basis Case)** $w = \epsilon$

$$q_i \wedge q_j \quad \bigvee \quad q_i \wedge q_j$$

$$(\ \delta^*(q_i, \epsilon) \in F \iff \delta^*(q_j, \epsilon) \notin F\ )$$

# Distinguishable States ( $\not\equiv$ )

We can *inductively* test $q_i$ is **distinguishable** with $q_j$ (i.e., $q_i \not\equiv q_j$):

- **(Basis Case)** $w = \epsilon$

$$\textcircled{q_i} \wedge \textcircled{\textcircled{q_j}} \quad \bigvee \quad \textcircled{\textcircled{q_i}} \wedge \textcircled{q_j}$$

$$\begin{aligned} & ( \ \delta^*(q_i, \epsilon) \in F \iff \delta^*(q_j, \epsilon) \notin F \ ) \\ \iff & ( \ q_i \in F \iff q_j \notin F \ ) \end{aligned}$$

# Distinguishable States ( $\not\equiv$ )

We can *inductively* test $q_i$ is **distinguishable** with $q_j$ (i.e., $q_i \not\equiv q_j$):

- **(Basis Case)** $w = \epsilon$

$$q_i \wedge q_j \quad \bigvee \quad q_i \wedge q_j$$

$$(\ \delta^*(q_i, \epsilon) \in F \iff \delta^*(q_j, \epsilon) \notin F\ )$$

$$\iff \quad (\ q_i \in F \iff q_j \notin F\ )$$

- **(Induction Case)** $w = ax$

# Distinguishable States ( $\not\equiv$ )

We can *inductively* test $q_i$ is **distinguishable** with $q_j$ (i.e., $q_i \not\equiv q_j$):

- **(Basis Case)** $w = \epsilon$

$$( \ \delta^*(q_i, \epsilon) \in F \iff \delta^*(q_j, \epsilon) \notin F \ )$$

$$\iff \quad ( \ q_i \in F \iff q_j \notin F \ )$$

- **(Induction Case)** $w = ax$

$\exists a \in \Sigma.\ \exists x \in \Sigma^*.$

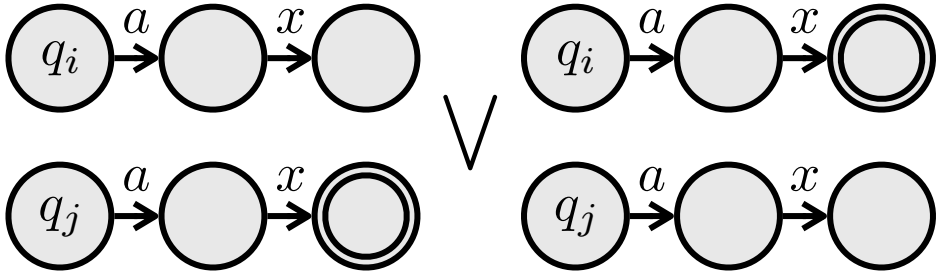


$$\exists a \in \Sigma.\ \exists x \in \Sigma^*.\ ( \ \delta^*(q_i, ax) \in F \iff \delta^*(q_j, ax) \notin F \ )$$

# Distinguishable States ( $\not\equiv$ )

We can *inductively* test $q_i$ is **distinguishable** with $q_j$ (i.e., $q_i \not\equiv q_j$):

- **(Basis Case)** $w = \epsilon$

$$( \ \delta^*(q_i, \epsilon) \in F \iff \delta^*(q_j, \epsilon) \notin F \ )$$

$$\iff \quad ( \ q_i \in F \iff q_j \notin F \ )$$

- **(Induction Case)** $w = ax$

$\exists a \in \Sigma.\ \exists x \in \Sigma^*.$

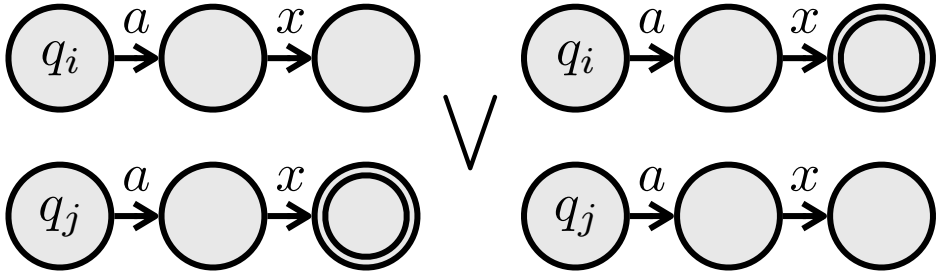


$$\exists a \in \Sigma.\ \exists x \in \Sigma^*.\ ( \ \delta^*(q_i, ax) \in F \iff \delta^*(q_j, ax) \notin F \ )$$

$$\iff \quad \exists a \in \Sigma.\ \exists x \in \Sigma^*.\ ( \ \delta^*(\delta(q_i, a), x) \in F \iff \delta^*(\delta(q_j, a), x) \notin F \ )$$

# Distinguishable States ( $\not\equiv$ )

We can *inductively* test $q_i$ is **distinguishable** with $q_j$ (i.e., $q_i \not\equiv q_j$):

- **(Basis Case)** $w = \epsilon$

$$( \ \delta^*(q_i, \epsilon) \in F \iff \delta^*(q_j, \epsilon) \notin F \ )$$

$$\iff \quad ( \ q_i \in F \iff q_j \notin F \ )$$

- **(Induction Case)** $w = ax$

$\exists a \in \Sigma.\ \exists x \in \Sigma^*.$

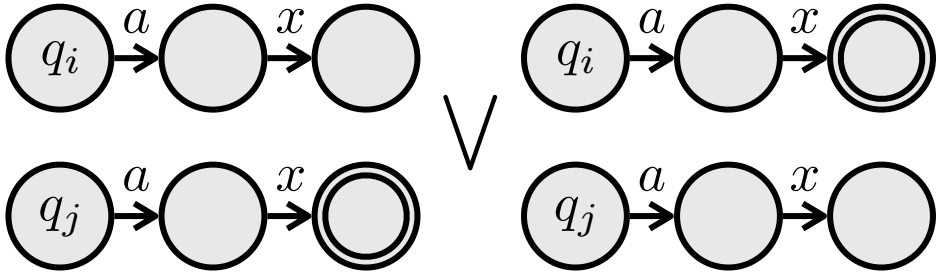


$$\exists a \in \Sigma.\ \exists x \in \Sigma^*.\ ( \ \delta^*(q_i, ax) \in F \iff \delta^*(q_j, ax) \notin F \ )$$

$$\iff \quad \exists a \in \Sigma.\ \exists x \in \Sigma^*.\ ( \ \delta^*(\delta(q_i, a), x) \in F \iff \delta^*(\delta(q_j, a), x) \notin F \ )$$

$$\iff \quad \exists a \in \Sigma.\ \ \delta(q_i, a) \not\equiv \delta(q_j, a)$$

# Distinguishable States ( $\not\equiv$ )

PLRG

**Definition (Distinguishable States ( $\not\equiv$ ))**

For a given DFA $D$, $q_i$ is **distinguishable** with $q_j$ (i.e., $q_i \not\equiv q_j$) iff

- **(Basis Case)** $q_i \in F \iff q_j \notin F$.
- **(Induction Case)** $\exists \mathtt{a} \in \Sigma.\ \delta(q_i, \mathtt{a}) \not\equiv \delta(q_j, \mathtt{a})$.

# Distinguishable States ( $\not\equiv$ )

## Definition (Distinguishable States ( $\not\equiv$ ))

For a given DFA $D$, $q_i$ is **distinguishable** with $q_j$ (i.e., $q_i \not\equiv q_j$) iff

- **(Basis Case)** $q_i \in F \iff q_j \notin F$.
- **(Induction Case)** $\exists \mathtt{a} \in \Sigma.\ \delta(q_i, \mathtt{a}) \not\equiv \delta(q_j, \mathtt{a})$.

$q_2 \not\equiv q_4$

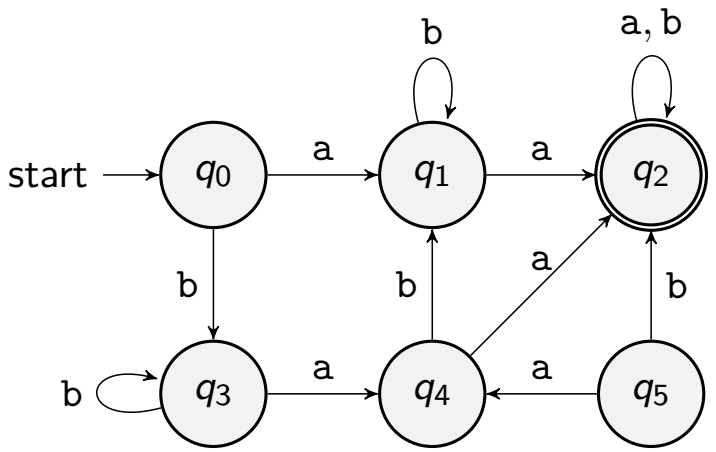

# Distinguishable States ( $\not\equiv$ )

## Definition (Distinguishable States ( $\not\equiv$ ))

For a given DFA $D$, $q_i$ is **distinguishable** with $q_j$ (i.e., $q_i \not\equiv q_j$) iff

- **(Basis Case)** $q_i \in F \iff q_j \notin F$.
- **(Induction Case)** $\exists \mathtt{a} \in \Sigma.\ \delta(q_i, \mathtt{a}) \not\equiv \delta(q_j, \mathtt{a})$.

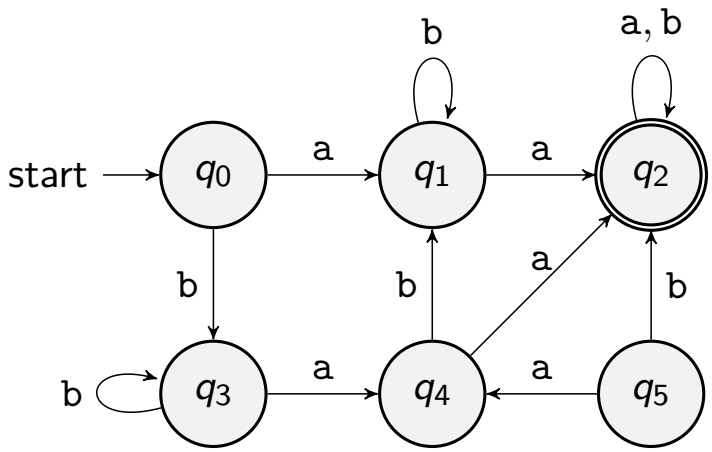


$q_2 \not\equiv q_4$
$(\because q_2 \in F \wedge q_4 \notin F)$

# Distinguishable States ( $\not\equiv$ )

## Definition (Distinguishable States ( $\not\equiv$ ))

For a given DFA $D$, $q_i$ is **distinguishable** with $q_j$ (i.e., $q_i \not\equiv q_j$) iff

- **(Basis Case)** $q_i \in F \iff q_j \notin F$.
- **(Induction Case)** $\exists \mathtt{a} \in \Sigma.\ \delta(q_i, \mathtt{a}) \not\equiv \delta(q_j, \mathtt{a})$.

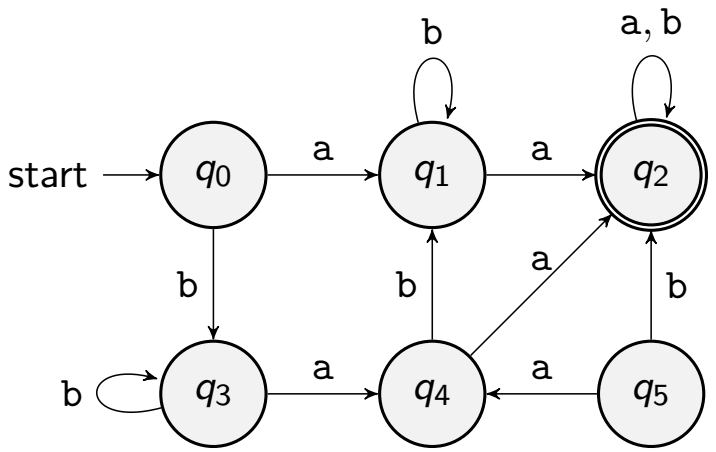


$q_2 \not\equiv q_4$
$(\because q_2 \in F \wedge q_4 \notin F)$

$q_1 \not\equiv q_3$

# Distinguishable States ( $\not\equiv$ )

## Definition (Distinguishable States ( $\not\equiv$ ))

For a given DFA $D$, $q_i$ is **distinguishable** with $q_j$ (i.e., $q_i \not\equiv q_j$) iff

- **(Basis Case)** $q_i \in F \iff q_j \notin F$.
- **(Induction Case)** $\exists \mathtt{a} \in \Sigma.\ \delta(q_i, \mathtt{a}) \not\equiv \delta(q_j, \mathtt{a})$.

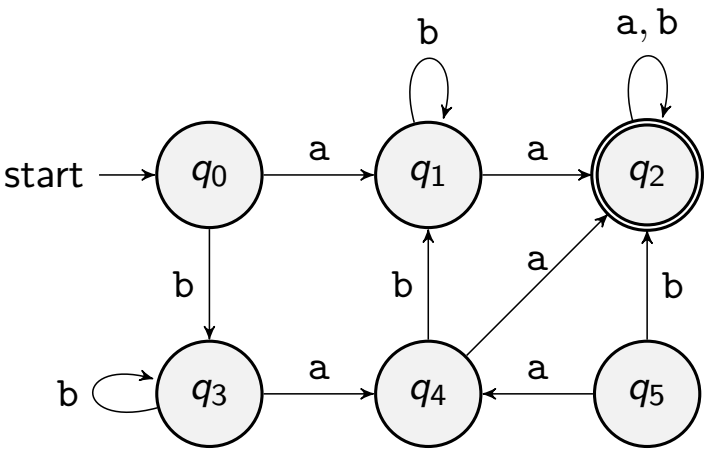


$q_2 \not\equiv q_4$
$(\because q_2 \in F \wedge q_4 \notin F)$

$q_1 \not\equiv q_3$
$(\because \delta(q_1, \mathtt{a}) = q_2 \not\equiv q_4 = \delta(q_3, \mathtt{a})))$

# Distinguishable States ( $\not\equiv$ )

## Definition (Distinguishable States ( $\not\equiv$ ))

For a given DFA $D$, $q_i$ is **distinguishable** with $q_j$ (i.e., $q_i \not\equiv q_j$) iff

- **(Basis Case)** $q_i \in F \iff q_j \notin F$.
- **(Induction Case)** $\exists \mathtt{a} \in \Sigma.\ \delta(q_i, \mathtt{a}) \not\equiv \delta(q_j, \mathtt{a})$.

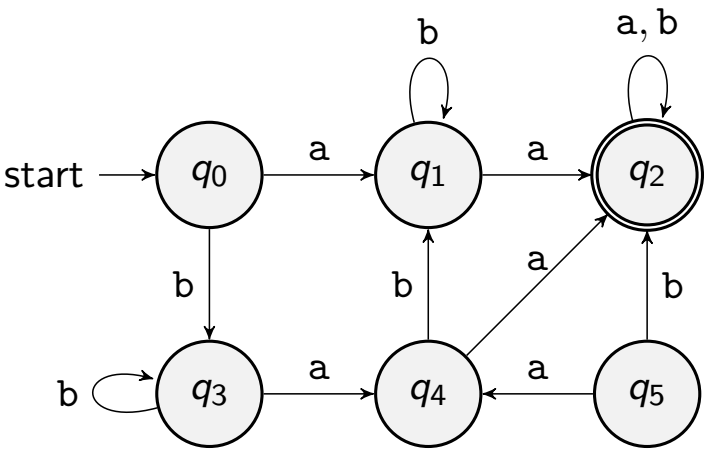


$q_2 \not\equiv q_4$
$(\because q_2 \in F \wedge q_4 \notin F)$

$q_1 \not\equiv q_3$
$(\because \delta(q_1, \mathtt{a}) = q_2 \not\equiv q_4 = \delta(q_3, \mathtt{a})))$

$q_0 \not\equiv q_4$

# Distinguishable States ( $\not\equiv$ )

## Definition (Distinguishable States ( $\not\equiv$ ))

For a given DFA $D$, $q_i$ is **distinguishable** with $q_j$ (i.e., $q_i \not\equiv q_j$) iff

- **(Basis Case)** $q_i \in F \iff q_j \notin F$.
- **(Induction Case)** $\exists \mathtt{a} \in \Sigma.\ \delta(q_i, \mathtt{a}) \not\equiv \delta(q_j, \mathtt{a})$.

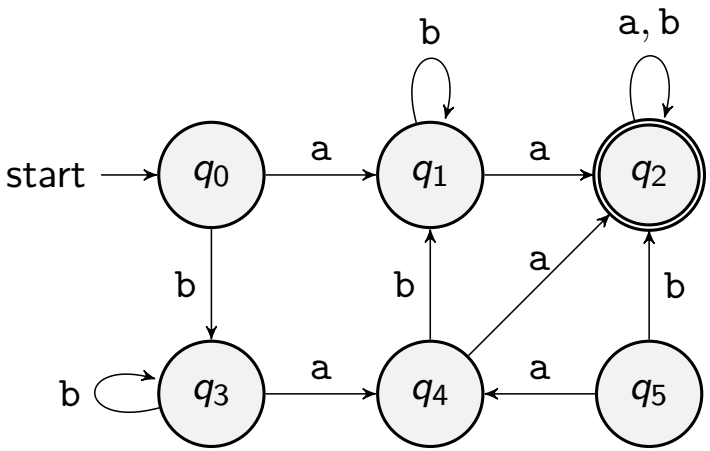


$q_2 \not\equiv q_4$
$(\because q_2 \in F \wedge q_4 \notin F)$

$q_1 \not\equiv q_3$
$(\because \delta(q_1, \mathtt{a}) = q_2 \not\equiv q_4 = \delta(q_3, \mathtt{a})))$

$q_0 \not\equiv q_4$
$(\because \delta(q_0, \mathtt{b}) = q_3 \not\equiv q_1 = \delta(q_4, \mathtt{b})))$

# Table-Filling Algorithm

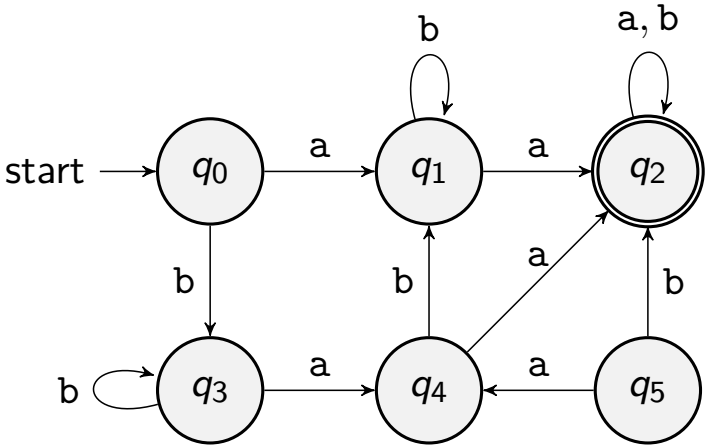


| q | a | b |
|---|---|---|
| $\rightarrow q_0$ | $q_1$ | $q_3$ |
| $q_1$ | $q_2$ | $q_1$ |
| $*q_2$ | $q_2$ | $q_2$ |
| $q_3$ | $q_4$ | $q_3$ |
| $q_4$ | $q_2$ | $q_1$ |
| $q_5$ | $q_4$ | $q_2$ |

# Table-Filling Algorithm

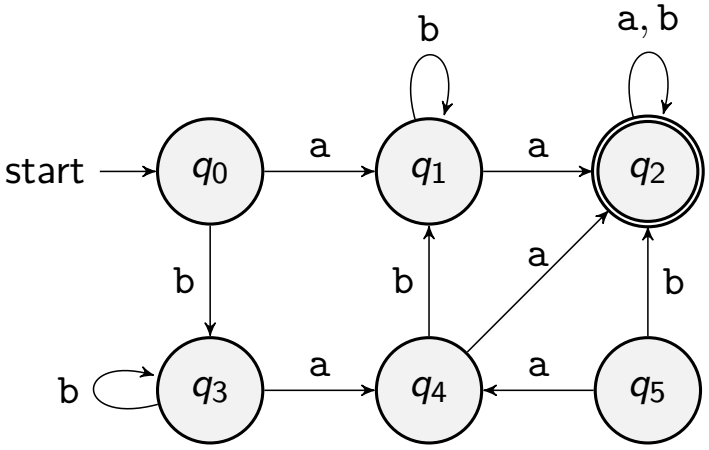


| q | a | b |
|---|---|---|
| $\rightarrow q_0$ | $q_1$ | $q_3$ |
| $q_1$ | $q_2$ | $q_1$ |
| $*q_2$ | $q_2$ | $q_2$ |
| $q_3$ | $q_4$ | $q_3$ |
| $q_4$ | $q_2$ | $q_1$ |
| $q_5$ | $q_4$ | $q_2$ |

**(Basis case)** $w = \epsilon$.

$$q_i \in F \iff q_j \notin F$$

**(Induction case)** $w = ax$.

$$\exists a \in \Sigma.\ \delta(q_i, a) \not\equiv \delta(q_j, a)$$

# Table-Filling Algorithm

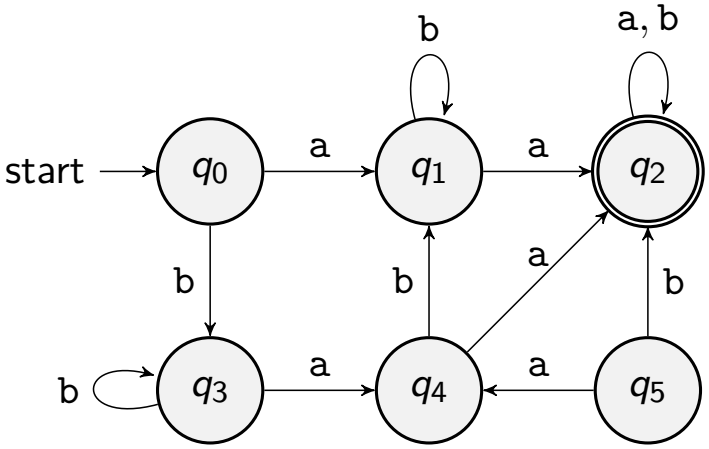


| q | a | b |
|---|---|---|
| $\rightarrow q_0$ | $q_1$ | $q_3$ |
| $q_1$ | $q_2$ | $q_1$ |
| $*q_2$ | $q_2$ | $q_2$ |
| $q_3$ | $q_4$ | $q_3$ |
| $q_4$ | $q_2$ | $q_1$ |
| $q_5$ | $q_4$ | $q_2$ |

**(Basis case)** $w = \epsilon$.

$$q_i \in F \iff q_j \notin F$$

**(Induction case)** $w = ax$.

$$\exists a \in \Sigma.\ \delta(q_i, a) \not\equiv \delta(q_j, a)$$

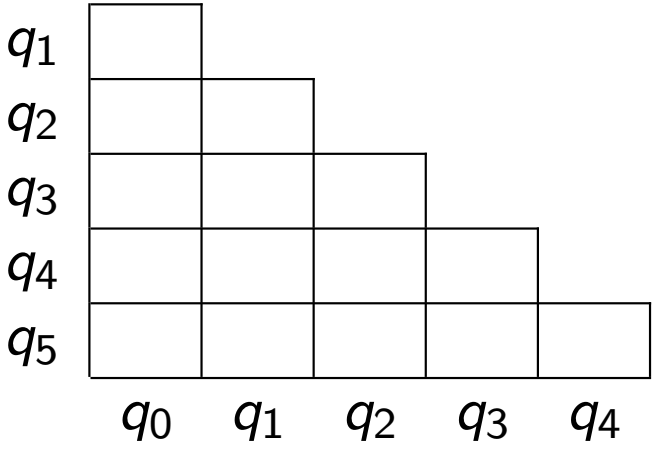

# Table-Filling Algorithm

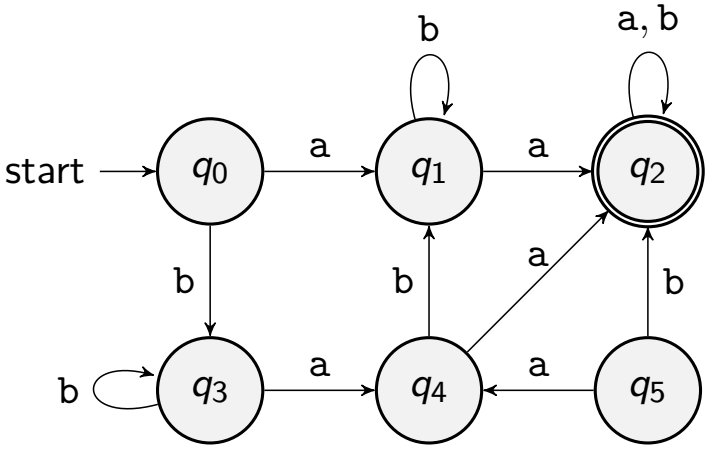


| q | a | b |
|---|---|---|
| $\rightarrow q_0$ | $q_1$ | $q_3$ |
| $q_1$ | $q_2$ | $q_1$ |
| $*q_2$ | $q_2$ | $q_2$ |
| $q_3$ | $q_4$ | $q_3$ |
| $q_4$ | $q_2$ | $q_1$ |
| $q_5$ | $q_4$ | $q_2$ |

**(Basis case)** $w = \epsilon$.

$$q_i \in F \iff q_j \notin F$$

**(Induction case)** $w = ax$.

$$\exists a \in \Sigma.\ \delta(q_i, a) \not\equiv \delta(q_j, a)$$

| | $q_0$ | $q_1$ | $q_2$ | $q_3$ | $q_4$ |
|---|---|---|---|---|---|
| $q_1$ | | | | | |
| $q_2$ | x | x | | | |
| $q_3$ | | | x | | |
| $q_4$ | | | x | | |
| $q_5$ | | | x | | |

# Table-Filling Algorithm

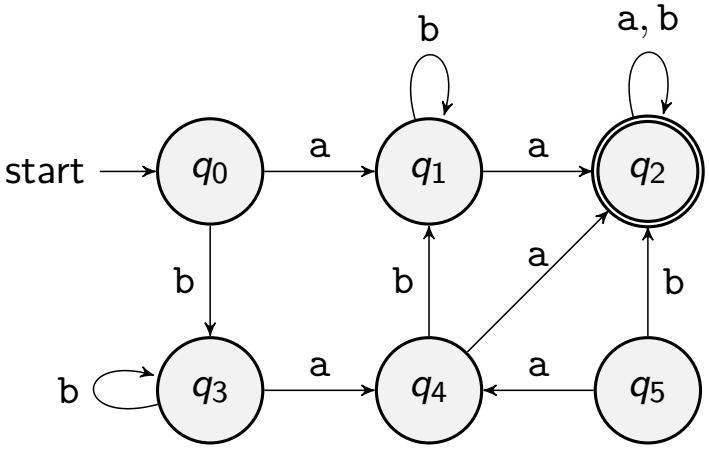


| q | a | b |
|---|---|---|
| $\rightarrow q_0$ | $q_1$ | $q_3$ |
| $q_1$ | $q_2$ | $q_1$ |
| $*q_2$ | $q_2$ | $q_2$ |
| $q_3$ | $q_4$ | $q_3$ |
| $q_4$ | $q_2$ | $q_1$ |
| $q_5$ | $q_4$ | $q_2$ |

**(Basis case)** $w = \epsilon$.

$$q_i \in F \iff q_j \notin F$$

**(Induction case)** $w = ax$.

$$\exists a \in \Sigma.\ \delta(q_i, a) \not\equiv \delta(q_j, a)$$

| | | | | | |
|---|---|---|---|---|---|
| $q_1$ | x | | | | |
| $q_2$ | x | x | | | |
| $q_3$ | | x | x | | |
| $q_4$ | x | | x | x | |
| $q_5$ | x | x | x | x | x |
| | $q_0$ | $q_1$ | $q_2$ | $q_3$ | $q_4$ |

# Table-Filling Algorithm

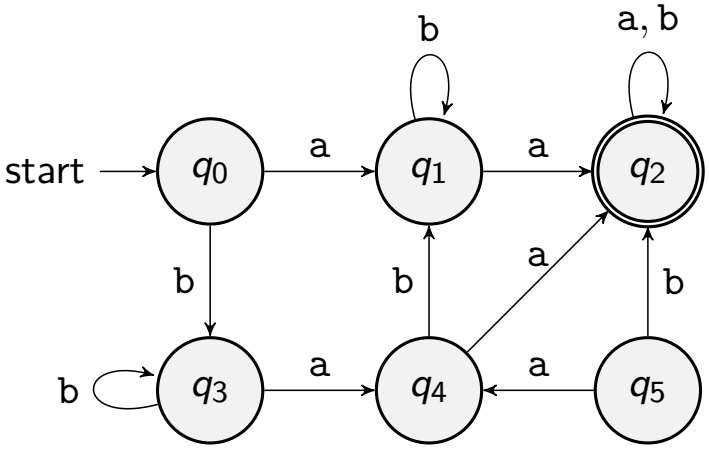


| q | a | b |
|---|---|---|
| $\rightarrow q_0$ | $q_1$ | $q_3$ |
| $q_1$ | $q_2$ | $q_1$ |
| $*q_2$ | $q_2$ | $q_2$ |
| $q_3$ | $q_4$ | $q_3$ |
| $q_4$ | $q_2$ | $q_1$ |
| $q_5$ | $q_4$ | $q_2$ |

**(Basis case)** $w = \epsilon$.

$$q_i \in F \iff q_j \notin F$$

**(Induction case)** $w = ax$.

$$\exists a \in \Sigma.\ \delta(q_i, a) \not\equiv \delta(q_j, a)$$

| | | | | | |
|---|---|---|---|---|---|
| $q_1$ | x | | | | |
| $q_2$ | x | x | | | |
| $q_3$ | | x | x | | |
| $q_4$ | x | | x | x | |
| $q_5$ | x | x | x | x | x |
| | $q_0$ | $q_1$ | $q_2$ | $q_3$ | $q_4$ |

$$q_0 \equiv q_3 \wedge q_1 \equiv q_4$$

# Equivalence of Finite Automata

PLRG

## Theorem (Equivalence of Finite Automata)

*Consider two DFA* $D = (Q, \Sigma, \delta, q_0, F)$ *and* $D' = (Q', \Sigma, \delta', q_0', F')$*. Then,*

$$L(D) = L(D') \iff q_0 \equiv q_0'$$

*in a DFA* $D'' = (Q \uplus Q', \Sigma, \delta'', q_0, F \uplus F')$ *where*

$$\forall q'' \in Q \uplus Q'.\ \delta''(q, a) = \begin{cases} \delta(q'', a) & q'' \in Q \\ \delta'(q'', a) & q'' \in Q' \end{cases}$$

# Equivalence of Finite Automata

PLRG

**Theorem (Equivalence of Finite Automata)**

*Consider two DFA* $D = (Q, \Sigma, \delta, q_0, F)$ *and* $D' = (Q', \Sigma, \delta', q_0', F')$*. Then,*

$$L(D) = L(D') \iff q_0 \equiv q_0'$$

*in a DFA* $D'' = (Q \uplus Q', \Sigma, \delta'', q_0, F \uplus F')$ *where*

$$\forall q'' \in Q \uplus Q'.\ \delta''(q, a) = \begin{cases} \delta(q'', a) & q'' \in Q \\ \delta'(q'', a) & q'' \in Q' \end{cases}$$

**Proof)** By the definition of equivalence of states, we have

$$\begin{aligned}
& L(D) = L(D') \\
\iff\ & \forall w \in \Sigma^*.\ (D \text{ accepts } w \iff D' \text{ accepts } w) \\
\iff\ & \forall w \in \Sigma^*.\ (\delta^*(q_0, w) \in F \iff \delta'^*(q_0', w) \in F') \\
\iff\ & \forall w \in \Sigma^*.\ (\delta''^*(q_0, w) \in F \cup F' \iff \delta''^*(q_0', w) \in F \cup F') \\
\iff\ & q_0 \equiv q_0' \text{ in } D''
\end{aligned}$$

# Equivalence of Finite Automata – Example 1

Let's test the equivalence of $D_0$ and $D_1$:

$D_0 =$

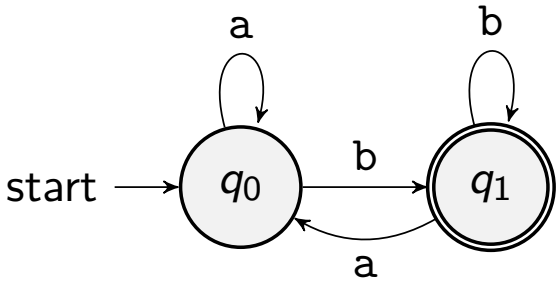


$D_1 =$

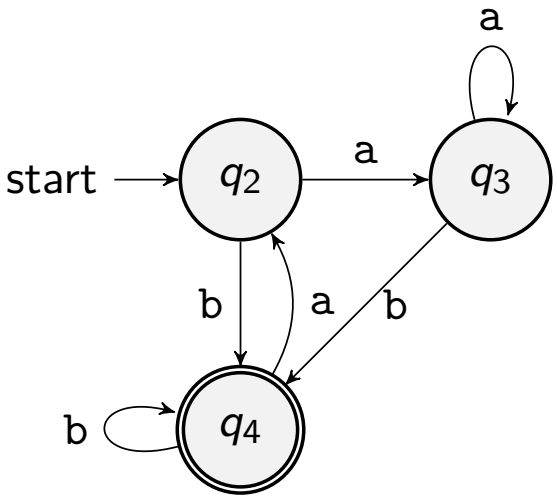

# Equivalence of Finite Automata – Example 1

Let's test the equivalence of $D_0$ and $D_1$:

$D_0 =$

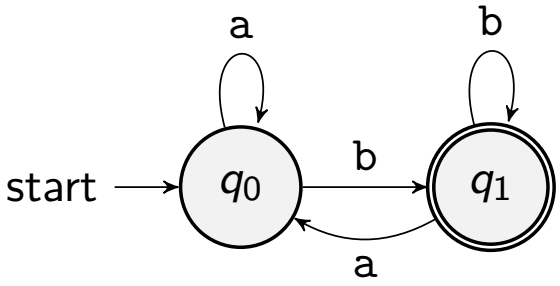


$D_1 =$

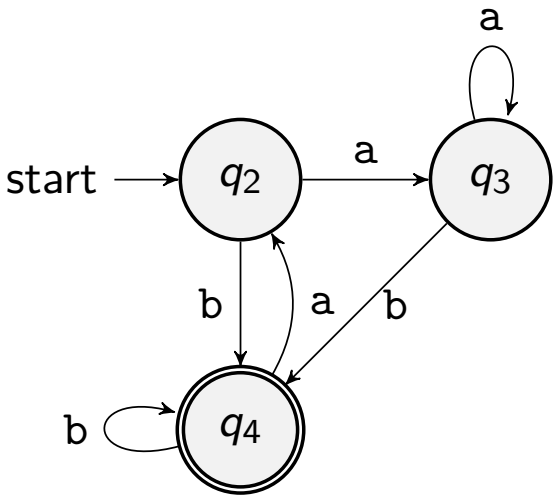


Let's perform the **table-filling algorithm**:

# Equivalence of Finite Automata – Example 1

Let's test the equivalence of $D_0$ and $D_1$:

$D_0 =$

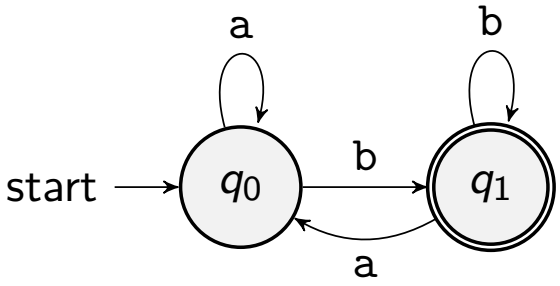


$D_1 =$

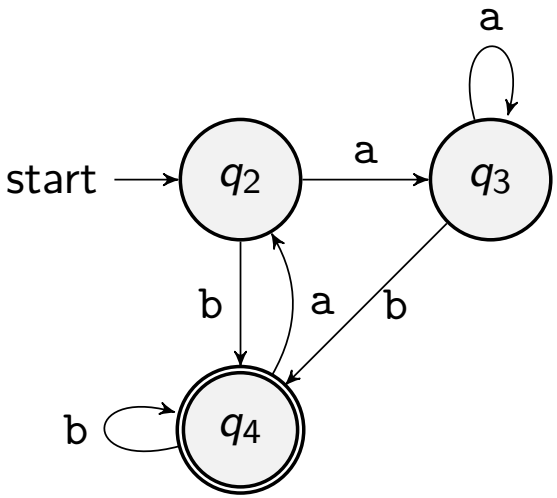


Let's perform the **table-filling algorithm**:

| | | | | |
|---|---|---|---|---|
| $q_1$ | $x$ | | | |
| $q_2$ | | $x$ | | |
| $q_3$ | | $x$ | | |
| $q_4$ | $x$ | | $x$ | $x$ |
| | $q_0$ | $q_1$ | $q_2$ | $q_3$ |

# Equivalence of Finite Automata – Example 1

Let's test the equivalence of $D_0$ and $D_1$:

$D_0 =$

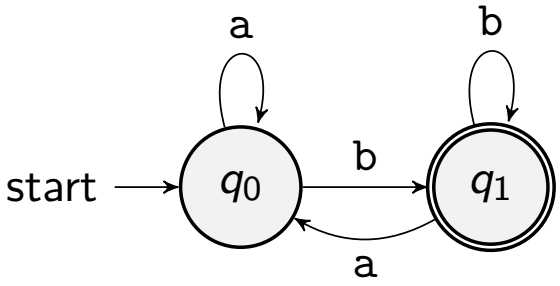


$D_1 =$

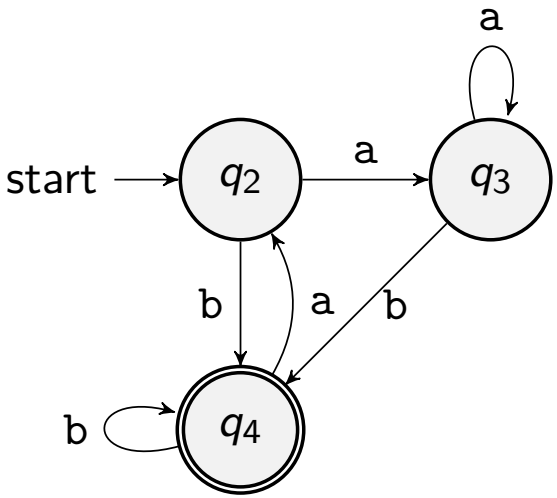


Let's perform the **table-filling algorithm**:

| | | | | |
|---|---|---|---|---|
| $q_1$ | $x$ | | | |
| $q_2$ | | $x$ | | |
| $q_3$ | | $x$ | | |
| $q_4$ | $x$ | | $x$ | $x$ |
| | $q_0$ | $q_1$ | $q_2$ | $q_3$ |

- $q_0 \equiv q_2 \equiv q_3$
- $q_1 \equiv q_4$

# Equivalence of Finite Automata – Example 1

Let's test the equivalence of $D_0$ and $D_1$:

$D_0 =$

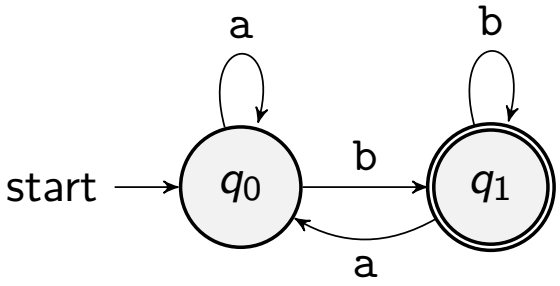


$D_1 =$

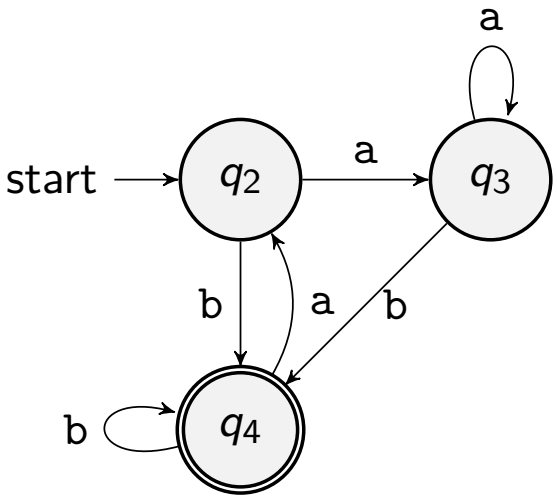


Let's perform the **table-filling algorithm**:

| | | | | |
|---|---|---|---|---|
| $q_1$ | $x$ | | | |
| $q_2$ | | $x$ | | |
| $q_3$ | | $x$ | | |
| $q_4$ | $x$ | | $x$ | $x$ |
| | $q_0$ | $q_1$ | $q_2$ | $q_3$ |

- $q_0 \equiv q_2 \equiv q_3$
- $q_1 \equiv q_4$

$$q_0 \equiv q_2 \implies L(D_0) = L(D_1) = \{w\mathtt{b} \mid w \in \{\mathtt{a}, \mathtt{b}\}^*\}$$

# Equivalence of Finite Automata – Example 2

Let's test the equivalence of $D_2$ and $D_3$:

$D_2 =$

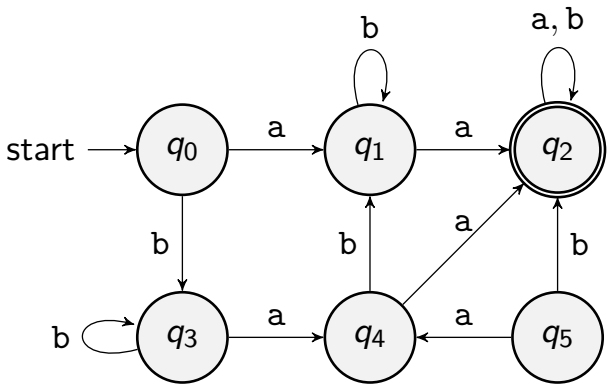


$D_3 =$

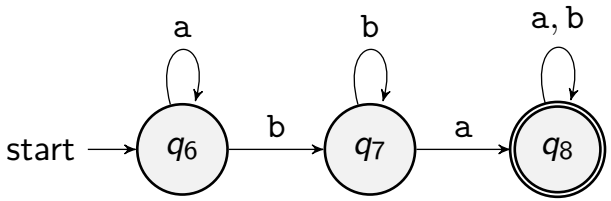

# Equivalence of Finite Automata – Example 2

Let's test the equivalence of $D_2$ and $D_3$:

$D_2 =$

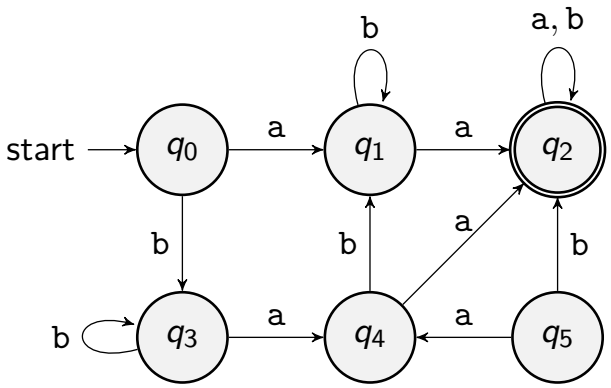


$D_3 =$

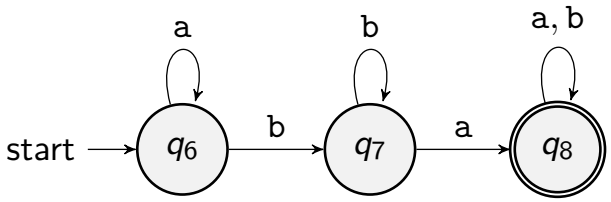


Let's perform the **table-filling algorithm**:

# Equivalence of Finite Automata – Example 2

Let's test the equivalence of $D_2$ and $D_3$:

$D_2 =$

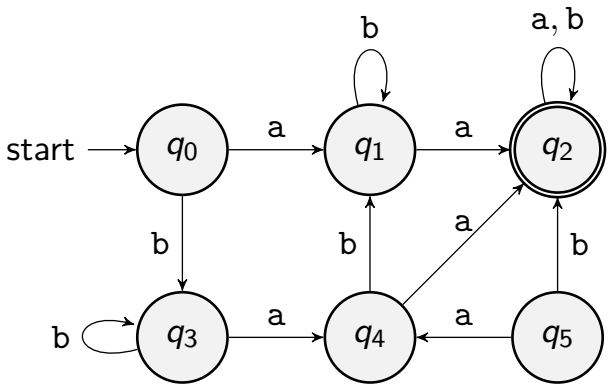


$D_3 =$

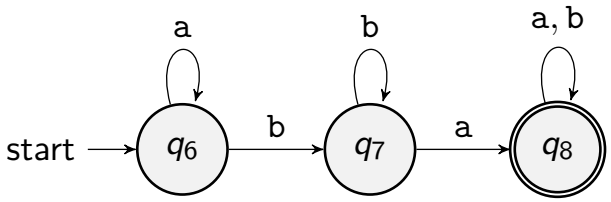


Let's perform the **table-filling algorithm**:

| | $q_0$ | $q_1$ | $q_2$ | $q_3$ | $q_4$ | $q_5$ | $q_6$ | $q_7$ |
|---|---|---|---|---|---|---|---|---|
| $q_1$ | x | | | | | | | |
| $q_2$ | x | x | | | | | | |
| $q_3$ | | x | x | | | | | |
| $q_4$ | x | | x | x | | | | |
| $q_5$ | x | x | x | x | x | | | |
| $q_6$ | x | x | x | x | x | x | | |
| $q_7$ | x | | x | x | | x | x | |
| $q_8$ | x | x | | x | x | x | x | x |

# Equivalence of Finite Automata – Example 2

Let's test the equivalence of $D_2$ and $D_3$:

$D_2 =$

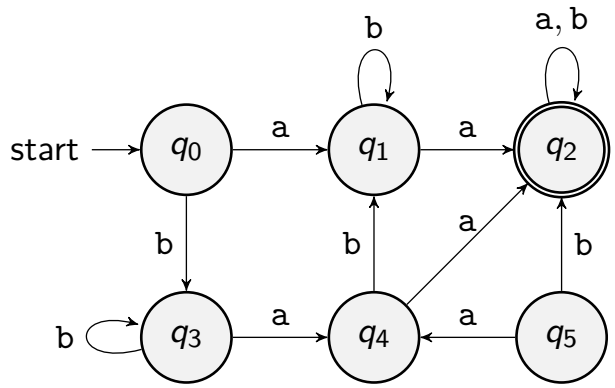


$D_3 =$

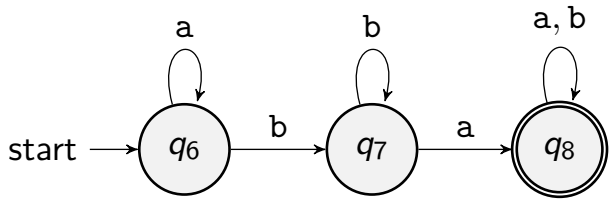


Let's perform the **table-filling algorithm**:

| | $q_0$ | $q_1$ | $q_2$ | $q_3$ | $q_4$ | $q_5$ | $q_6$ | $q_7$ |
|---|---|---|---|---|---|---|---|---|
| $q_1$ | x | | | | | | | |
| $q_2$ | x | x | | | | | | |
| $q_3$ | | x | x | | | | | |
| $q_4$ | x | | x | x | | | | |
| $q_5$ | x | x | x | x | x | | | |
| $q_6$ | x | x | x | x | x | x | | |
| $q_7$ | x | | x | x | | x | x | |
| $q_8$ | x | x | | x | x | x | x | x |

- $q_0 \equiv q_3$
- $q_1 \equiv q_4 \equiv q_7$
- $q_2 \equiv q_8$
- $q_5$
- $q_6$

# Equivalence of Finite Automata – Example 2

Let's test the equivalence of $D_2$ and $D_3$:

$D_2 =$

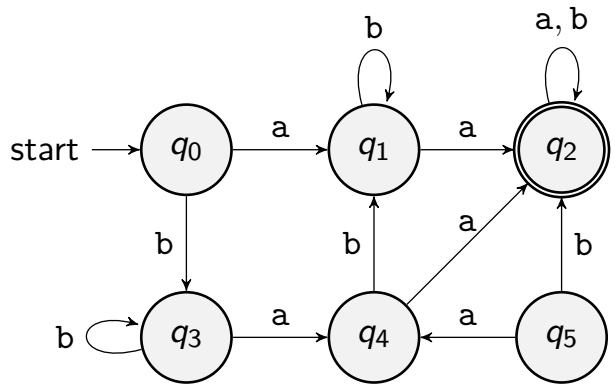


$D_3 =$

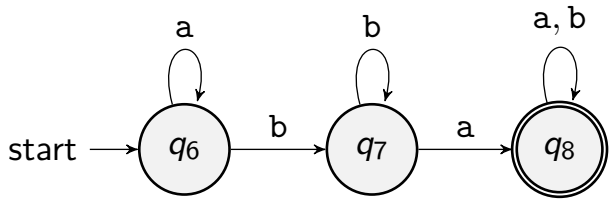


Let's perform the **table-filling algorithm**:

| | $q_0$ | $q_1$ | $q_2$ | $q_3$ | $q_4$ | $q_5$ | $q_6$ | $q_7$ |
|---|---|---|---|---|---|---|---|---|
| $q_1$ | x | | | | | | | |
| $q_2$ | x | x | | | | | | |
| $q_3$ | | x | x | | | | | |
| $q_4$ | x | | x | x | | | | |
| $q_5$ | x | x | x | x | x | | | |
| $q_6$ | x | x | x | x | x | x | | |
| $q_7$ | x | | x | x | | x | x | |
| $q_8$ | x | x | | x | x | x | x | x |

- $q_0 \equiv q_3$
- $q_1 \equiv q_4 \equiv q_7$
- $q_2 \equiv q_8$
- $q_5$
- $q_6$

$$q_0 \not\equiv q_6 \implies L(D_2) \neq L(D_3) \ \ (\because \texttt{ba} \notin L(D_2) \text{ but } \texttt{ba} \in L(D_3))$$

# Contents

1. Equivalence of Finite Automata
   - Equivalence of States ($\equiv$)
   - Distinguishable States ( $\not\equiv$ )
   - Table-Filling Algorithm
   - Equivalence of Finite Automata
   - Examples

2. Minimization of Finite Automata
   - Minimization Algorithm
   - Examples
   - Proof of Minimum-State DFA

# Minimization of Finite Automata

Is it possible to **minimize** a DFA?

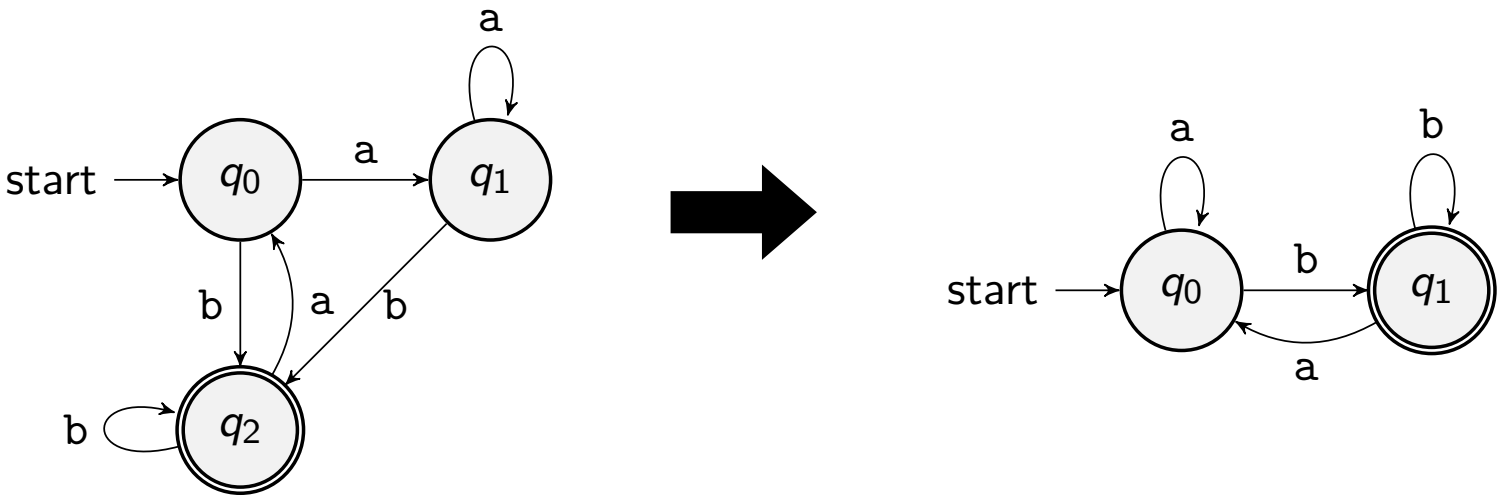

# Minimization of Finite Automata

Is it possible to **minimize** a DFA?

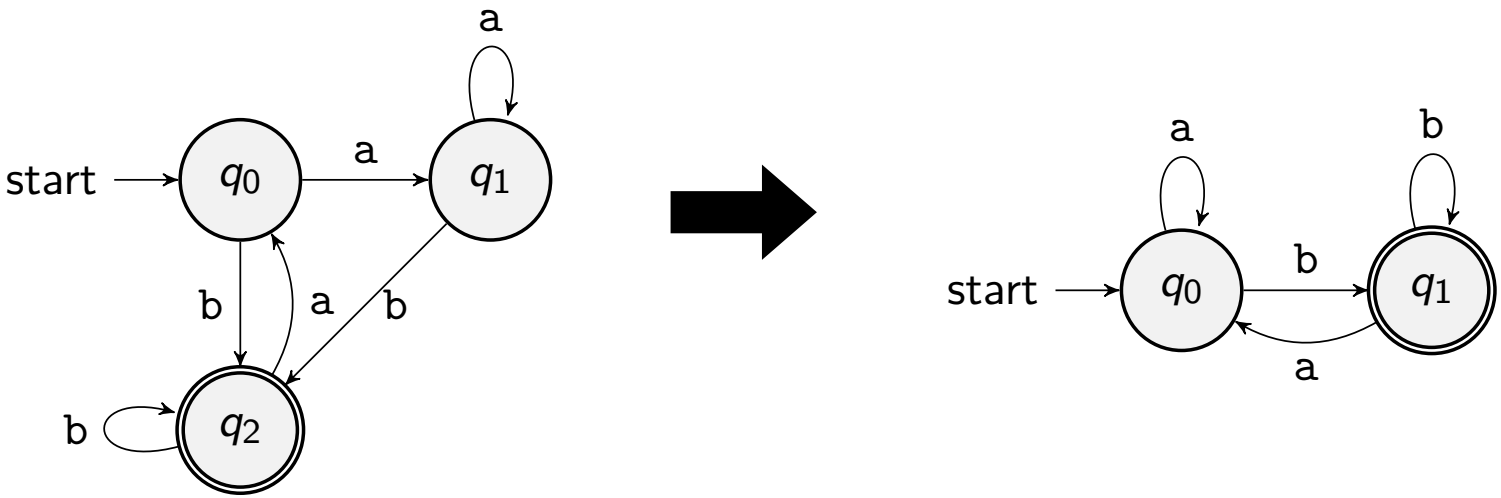


Yes, let's utilize **equivalence classes** $Q/_{\equiv}$ of states defined with $\equiv$.

# Minimization of Finite Automata

Is it possible to **minimize** a DFA?

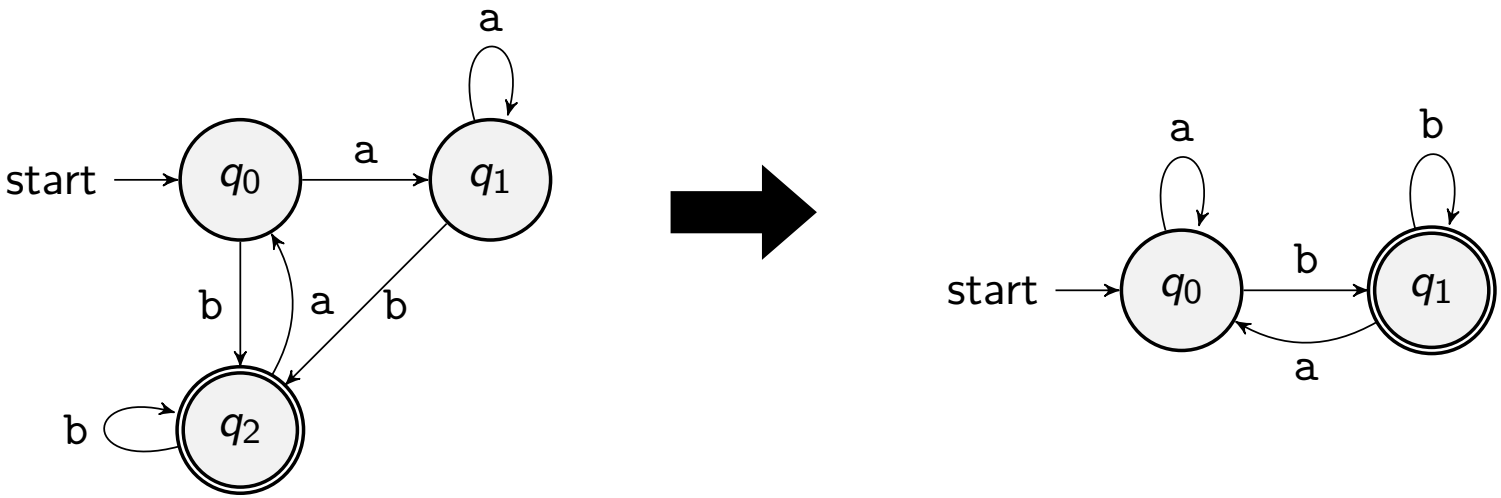


Yes, let's utilize **equivalence classes** $Q/_{\equiv}$ of states defined with $\equiv$.

Note that $\equiv$ is an **equivalence relation**:

- reflexive: $\forall q \in Q.\ q \equiv q$
- symmetric: $\forall q, q' \in Q.\ q \equiv q' \Leftrightarrow q' \equiv q$
- transitive: $\forall q, q', q'' \in Q.\ q \equiv q' \wedge q' \equiv q'' \Leftrightarrow q \equiv q''$

# Minimization Algorithm

For a given DFA $D = (Q, \sigma, \delta, q_0, F)$, the **minimization** algorithm is:

# Minimization Algorithm

For a given DFA $D = (Q, \sigma, \delta, q_0, F)$, the **minimization** algorithm is:

1. Remove all **unreachable states** from the initial state $q_0$.

# Minimization Algorithm

For a given DFA $D = (Q, \sigma, \delta, q_0, F)$, the **minimization** algorithm is:

1. Remove all **unreachable states** from the initial state $q_0$.
2. Partition the remaining states into **equivalence classes**:

$$Q/_{\equiv} = \{[q]_{\equiv} \mid q \in Q\}$$

where the **equivalence class** of a state $q$ is defined as:

$$[q]_{\equiv} = \{q' \in Q \mid q \equiv q'\}$$

# Minimization Algorithm

For a given DFA $D = (Q, \sigma, \delta, q_0, F)$, the **minimization** algorithm is:

1. Remove all **unreachable states** from the initial state $q_0$.
2. Partition the remaining states into **equivalence classes**:

$$Q/_{\equiv} = \{[q]_{\equiv} \mid q \in Q\}$$

   where the **equivalence class** of a state $q$ is defined as:

$$[q]_{\equiv} = \{q' \in Q \mid q \equiv q'\}$$

3. Construct a new DFA $D/_{\equiv} = (Q/_{\equiv}, \Sigma, \delta/_{\equiv}, [q_0]_{\equiv}, F/_{\equiv})$ where
   - $\delta/_{\equiv} : Q/_{\equiv} \times \Sigma \to Q/_{\equiv}$ is defined by:

$$\forall q \in Q.\ \forall a \in \Sigma.\ \delta/_{\equiv}([q]_{\equiv}, a) = [\delta(q, a)]_{\equiv}$$

     (We can prove $\forall q', q'' \in [q]_{\equiv}.\ \forall a \in \Sigma.\ [\delta_{\equiv}(q', a)]_{\equiv} = [\delta_{\equiv}(q'', a)]_{\equiv}$.)
   - $F/_{\equiv} = \{[q]_{\equiv} \mid q \in F\}$

# Minimization Algorithm - Example 1

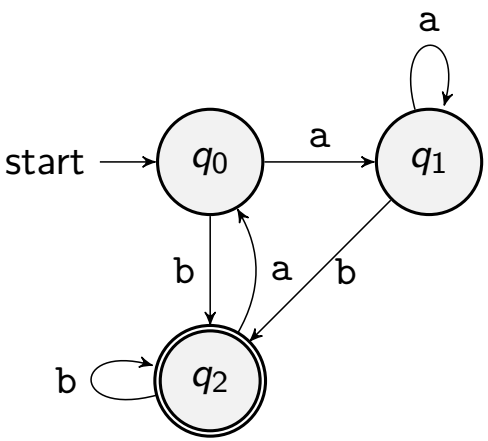

# Minimization Algorithm - Example 1

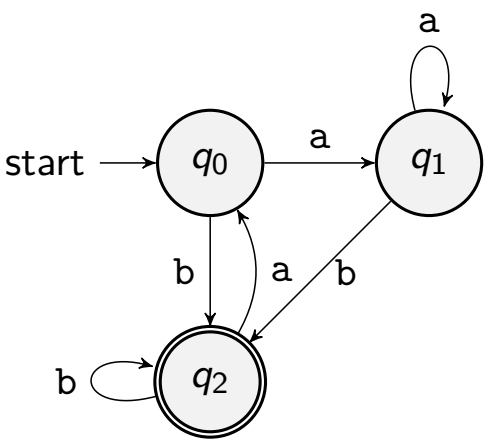


① Remove unreachable states

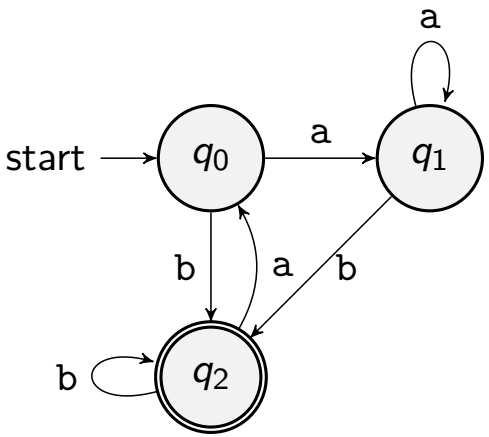

# Minimization Algorithm - Example 1

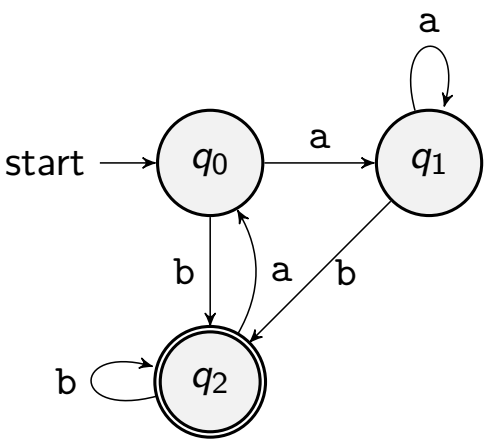


① Remove unreachable states

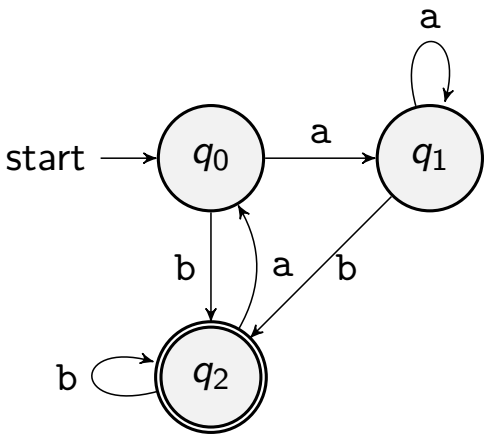


② Partition the states into $Q/_{\equiv}$

$$
\begin{aligned}
Q/_{\equiv} = \{ & \\
& \{q_0, q_1\}, \quad (\because q_0 \equiv q_1) \\
& \{q_2\}, \\
\} &
\end{aligned}
$$

# Minimization Algorithm - Example 1

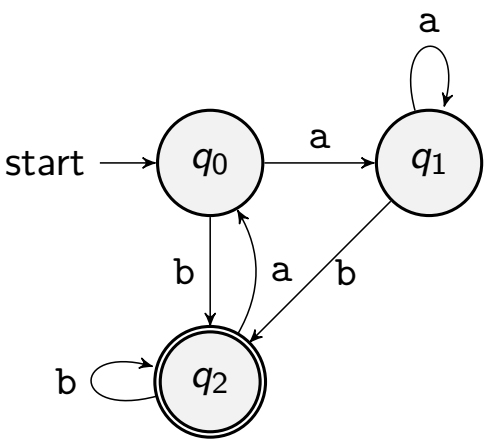


① Remove unreachable states

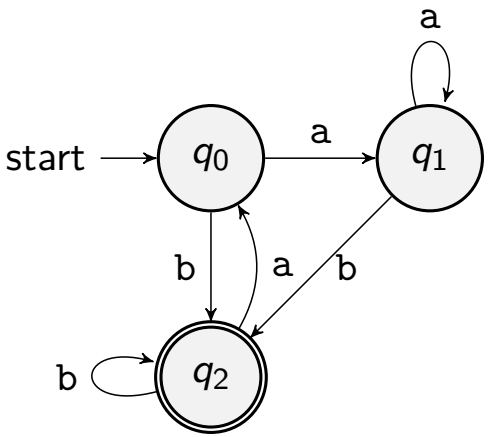


② Partition the states into $Q/_{\equiv}$

$$
\begin{aligned}
Q/_{\equiv} = \{ & \\
& \{q_0, q_1\}, \quad (\because q_0 \equiv q_1) \\
& \{q_2\}, \\
\} &
\end{aligned}
$$

③ Construct a new DFA $D/_{\equiv}$

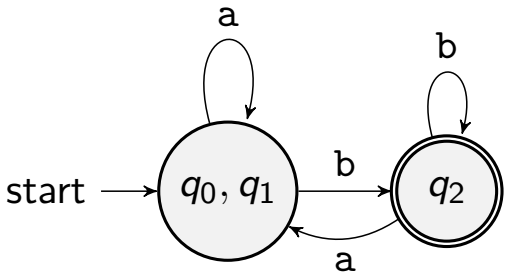

# Minimization Algorithm - Example 2

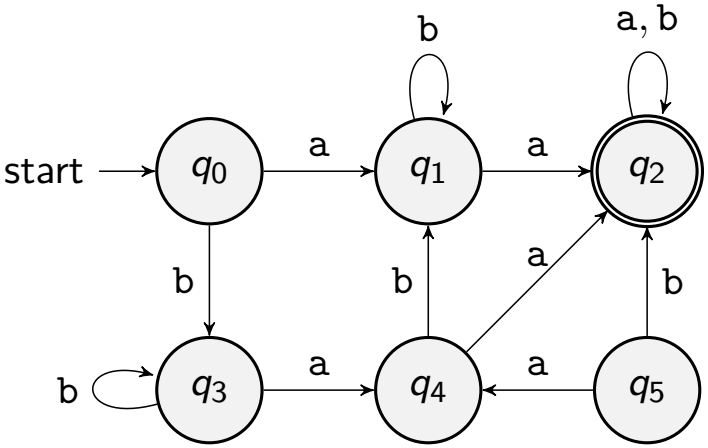

# Minimization Algorithm - Example 2

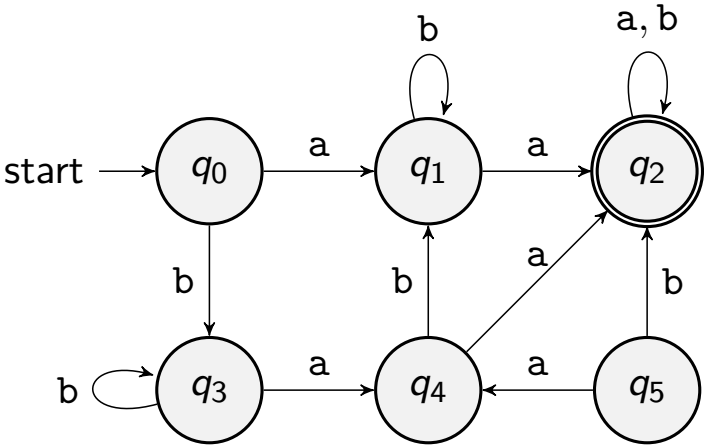


① Remove unreachable states

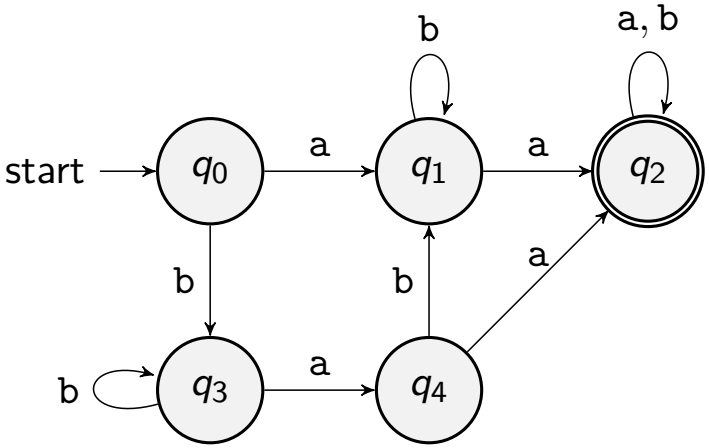

# Minimization Algorithm - Example 2

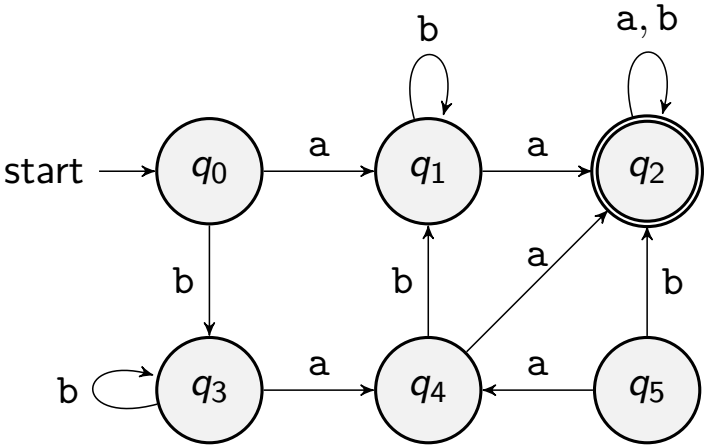


① Remove unreachable states

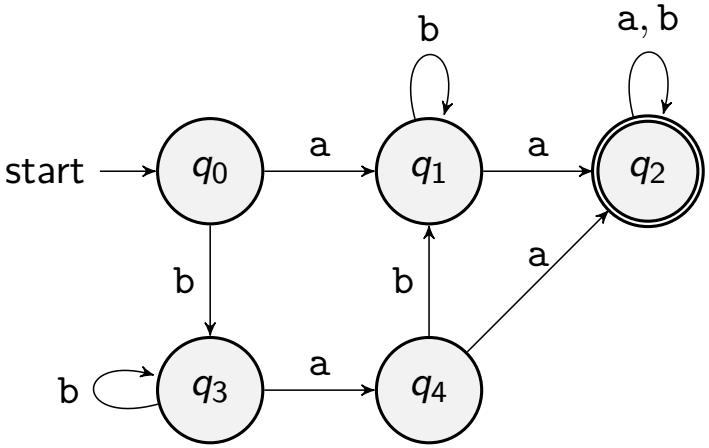


② Partition the states into $Q/_{\equiv}$

$$
\begin{aligned}
Q/_{\equiv} = \{ & \\
& \{q_0, q_3\}, \quad (\because q_0 \equiv q_3) \\
& \{q_1, q_4\}, \quad (\because q_1 \equiv q_4) \\
& \{q_2\}, \\
\} &
\end{aligned}
$$

# Minimization Algorithm - Example 2

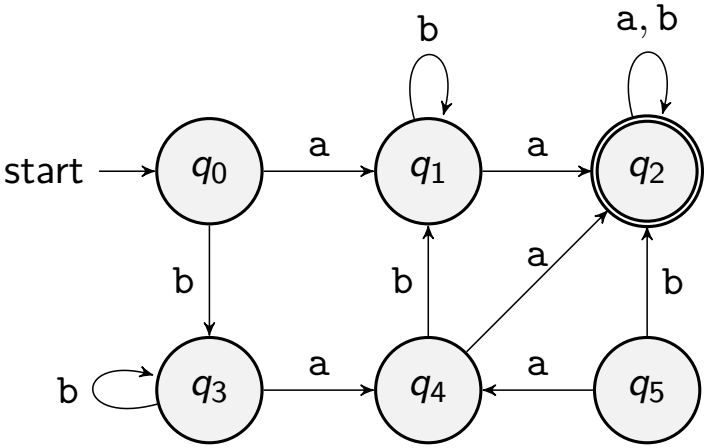


① Remove unreachable states

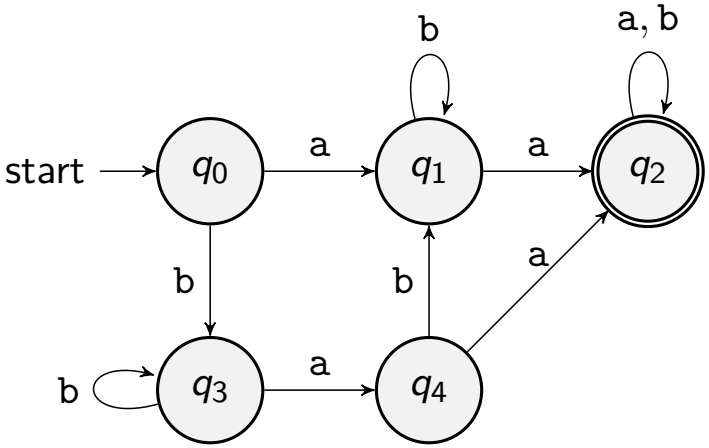


② Partition the states into $Q/_{\equiv}$

$$
\begin{aligned}
Q/_{\equiv} = \{ & \\
& \{q_0, q_3\}, \quad (\because q_0 \equiv q_3) \\
& \{q_1, q_4\}, \quad (\because q_1 \equiv q_4) \\
& \{q_2\}, \\
\} &
\end{aligned}
$$

③ Construct a new DFA $D/_{\equiv}$

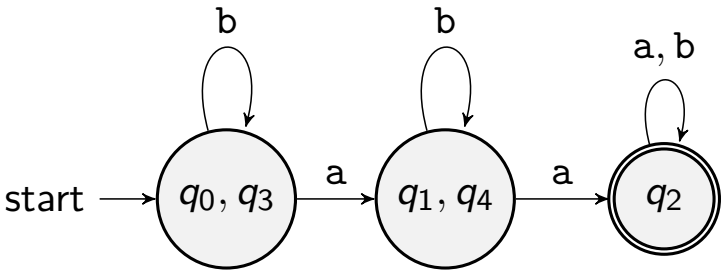

# Proof of Minimum-State DFA

PLRG

**Theorem (Minimum-State DFA)**

*For a given DFA* $D = (Q, \Sigma, \delta, q_0, F)$*, its minimized DFA* $D/_{\equiv} = (Q/_{\equiv}, \Sigma, \delta/_{\equiv}, [q_0]_{\equiv}, F/_{\equiv})$ *is a* **minimum-state DFA** *of* $D$*.*

*(i.e.,* $\nexists$ *DFA* $D' = (Q', \Sigma, \delta', q_0', F')$*. s.t.* $L(D') = L(D) \wedge |Q'| < |Q/_{\equiv}|$*).*

# Proof of Minimum-State DFA

PLRG

**Theorem (Minimum-State DFA)**

*For a given DFA* $D = (Q, \Sigma, \delta, q_0, F)$*, its minimized DFA* $D/_{\equiv} = (Q/_{\equiv}, \Sigma, \delta/_{\equiv}, [q_0]_{\equiv}, F/_{\equiv})$ *is a* **minimum-state DFA** *of* $D$*.*

*(i.e.,* $\nexists$ *DFA* $D' = (Q', \Sigma, \delta', q_0', F')$*. s.t.* $L(D') = L(D) \wedge |Q'| < |Q/_{\equiv}|$*).*

- Assume that $\exists$ DFA $D'$. Then, $m < n$ when $m = |Q'|$ and $n = |Q/_{\equiv}|$.

# Proof of Minimum-State DFA

**Theorem (Minimum-State DFA)**

*For a given DFA $D = (Q, \Sigma, \delta, q_0, F)$, its minimized DFA $D/_{\equiv} = (Q/_{\equiv}, \Sigma, \delta/_{\equiv}, [q_0]_{\equiv}, F/_{\equiv})$ is a* **minimum-state DFA** *of $D$.*

*(i.e., $\nexists$ DFA $D' = (Q', \Sigma, \delta', q_0', F')$. s.t. $L(D') = L(D) \wedge |Q'| < |Q/_{\equiv}|$).*

- Assume that $\exists$ DFA $D'$. Then, $m < n$ when $m = |Q'|$ and $n = |Q/_{\equiv}|$.
- For any state $q \in Q/_{\equiv}$, we can find a state $q' \in Q'$ such that $q \equiv q'$.

  (We will prove it as a lemma in the next slide.)

# Proof of Minimum-State DFA

PLRG

**Theorem (Minimum-State DFA)**

*For a given DFA* $D = (Q, \Sigma, \delta, q_0, F)$*, its minimized DFA* $D/_{\equiv} = (Q/_{\equiv}, \Sigma, \delta/_{\equiv}, [q_0]_{\equiv}, F/_{\equiv})$ *is a* **minimum-state DFA** *of* $D$*.*

*(i.e.,* $\nexists$ *DFA* $D' = (Q', \Sigma, \delta', q_0', F')$*. s.t.* $L(D') = L(D) \wedge |Q'| < |Q/_{\equiv}|$*).*

- Assume that $\exists$ DFA $D'$. Then, $m < n$ when $m = |Q'|$ and $n = |Q/_{\equiv}|$.
- For any state $q \in Q/_{\equiv}$, we can find a state $q' \in Q'$ such that $q \equiv q'$.

  (We will prove it as a lemma in the next slide.)
- By Pigeonhole Principle, $\exists q_i \neq q_j \in Q/_{\equiv}.\ \exists q' \in Q'.\ q_i \equiv q' \wedge q_j \equiv q'$.

# Proof of Minimum-State DFA

PLRG

**Theorem (Minimum-State DFA)**

*For a given DFA* $D = (Q, \Sigma, \delta, q_0, F)$*, its minimized DFA* $D/_{\equiv} = (Q/_{\equiv}, \Sigma, \delta/_{\equiv}, [q_0]_{\equiv}, F/_{\equiv})$ *is a* **minimum-state DFA** *of* $D$*.*

*(i.e.,* $\nexists$ *DFA* $D' = (Q', \Sigma, \delta', q_0', F')$*. s.t.* $L(D') = L(D) \wedge |Q'| < |Q/_{\equiv}|$*).*

- Assume that $\exists$ DFA $D'$. Then, $m < n$ when $m = |Q'|$ and $n = |Q/_{\equiv}|$.
- For any state $q \in Q/_{\equiv}$, we can find a state $q' \in Q'$ such that $q \equiv q'$.

  (We will prove it as a lemma in the next slide.)
- By Pigeonhole Principle, $\exists q_i \neq q_j \in Q/_{\equiv}.\ \exists q' \in Q'.\ q_i \equiv q' \wedge q_j \equiv q'$.
- It means that $q_i \equiv q_j$. However, it contradicts that $Q/_{\equiv}$ is partitioned into equivalence classes of states. $\square$

# Proof of Minimum-State DFA – Lemma

PLRG

## Lemma

*Consider a given DFA* $D = (Q, \Sigma, \delta, q_0, F)$*. Then, let*

- $D/_{\equiv} = (Q/_{\equiv}, \Sigma, \delta/_{\equiv}, [q_0]_{\equiv}, F/_{\equiv})$ *be its minimized DFA*
- $D' = (Q', \Sigma, \delta', q_0', F')$ *be another DFA such that* $L(D) = L(D')$

*Then, for any state* $q \in Q/_{\equiv}$*, we can find a state* $q' \in Q'$ *such that* $q \equiv q'$*.*

# Proof of Minimum-State DFA – Lemma

PLRG

## Lemma

*Consider a given DFA* $D = (Q, \Sigma, \delta, q_0, F)$*. Then, let*

- $D/_{\equiv} = (Q/_{\equiv}, \Sigma, \delta/_{\equiv}, [q_0]_{\equiv}, F/_{\equiv})$ *be its minimized DFA*
- $D' = (Q', \Sigma, \delta', q_0', F')$ *be another DFA such that* $L(D) = L(D')$

*Then, for any state* $q \in Q/_{\equiv}$*, we can find a state* $q' \in Q'$ *such that* $q \equiv q'$*.*

First, $\delta'^*(q_0', a_1 \cdots a_i) \equiv \delta/_{\equiv}{}^*(q_0, a_1 \cdots a_i)$ for all $0 \leq i \leq k$.

# Proof of Minimum-State DFA – Lemma

PLRG

## Lemma

*Consider a given DFA* $D = (Q, \Sigma, \delta, q_0, F)$*. Then, let*

- $D/_{\equiv} = (Q/_{\equiv}, \Sigma, \delta/_{\equiv}, [q_0]_{\equiv}, F/_{\equiv})$ *be its minimized DFA*
- $D' = (Q', \Sigma, \delta', q_0', F')$ *be another DFA such that* $L(D) = L(D')$

*Then, for any state* $q \in Q/_{\equiv}$*, we can find a state* $q' \in Q'$ *such that* $q \equiv q'$*.*

First, $\delta'^*(q_0', a_1 \cdots a_i) \equiv \delta/_{\equiv}{}^*(q_0, a_1 \cdots a_i)$ for all $0 \leq i \leq k$.

- **(Basis Case)** $\delta'^*(q_0', \epsilon) = q_0' \equiv q_0 = \delta/_{\equiv}{}^*(q_0, \epsilon) \quad (\because L(D') = L(D/_{\equiv}))$

# Proof of Minimum-State DFA – Lemma

PLRG

## Lemma

*Consider a given DFA* $D = (Q, \Sigma, \delta, q_0, F)$*. Then, let*

- $D/_{\equiv} = (Q/_{\equiv}, \Sigma, \delta/_{\equiv}, [q_0]_{\equiv}, F/_{\equiv})$ *be its minimized DFA*
- $D' = (Q', \Sigma, \delta', q_0', F')$ *be another DFA such that* $L(D) = L(D')$

*Then, for any state* $q \in Q/_{\equiv}$*, we can find a state* $q' \in Q'$ *such that* $q \equiv q'$*.*

First, $\delta'^*(q_0', a_1 \cdots a_i) \equiv \delta/_{\equiv}{}^*(q_0, a_1 \cdots a_i)$ for all $0 \leq i \leq k$.

- **(Basis Case)** $\delta'^*(q_0', \epsilon) = q_0' \equiv q_0 = \delta/_{\equiv}{}^*(q_0, \epsilon) \quad (\because L(D') = L(D/_{\equiv}))$
- **(Induction Case)** Assume $\delta'^*(q_0', a_1 \cdots a_i) \not\equiv \delta/_{\equiv}{}^*(q_0, a_1 \cdots a_i)$.

# Proof of Minimum-State DFA – Lemma

PLRG

## Lemma

*Consider a given DFA* $D = (Q, \Sigma, \delta, q_0, F)$*. Then, let*

- $D/_{\equiv} = (Q/_{\equiv}, \Sigma, \delta/_{\equiv}, [q_0]_{\equiv}, F/_{\equiv})$ *be its minimized DFA*
- $D' = (Q', \Sigma, \delta', q_0', F')$ *be another DFA such that* $L(D) = L(D')$

*Then, for any state* $q \in Q/_{\equiv}$*, we can find a state* $q' \in Q'$ *such that* $q \equiv q'$*.*

First, $\delta'^*(q_0', a_1 \cdots a_i) \equiv \delta/_{\equiv}{}^*(q_0, a_1 \cdots a_i)$ for all $0 \leq i \leq k$.

- **(Basis Case)** $\delta'^*(q_0', \epsilon) = q_0' \equiv q_0 = \delta/_{\equiv}{}^*(q_0, \epsilon) \quad (\because L(D') = L(D/_{\equiv}))$
- **(Induction Case)** Assume $\delta'^*(q_0', a_1 \cdots a_i) \not\equiv \delta/_{\equiv}{}^*(q_0, a_1 \cdots a_i)$.
  Then, by the definition of distinguishable states,
  $\delta'^*(q_0', a_1 \cdots a_{i-1}) \not\equiv \delta/_{\equiv}{}^*(q_0, a_1 \cdots a_{i-1})$.

# Proof of Minimum-State DFA – Lemma

PLRG

## Lemma

*Consider a given DFA* $D = (Q, \Sigma, \delta, q_0, F)$*. Then, let*

- $D/_{\equiv} = (Q/_{\equiv}, \Sigma, \delta/_{\equiv}, [q_0]_{\equiv}, F/_{\equiv})$ *be its minimized DFA*
- $D' = (Q', \Sigma, \delta', q_0', F')$ *be another DFA such that* $L(D) = L(D')$

*Then, for any state* $q \in Q/_{\equiv}$*, we can find a state* $q' \in Q'$ *such that* $q \equiv q'$*.*

First, $\delta'^*(q_0', a_1 \cdots a_i) \equiv \delta/_{\equiv}{}^*(q_0, a_1 \cdots a_i)$ for all $0 \leq i \leq k$.

- **(Basis Case)** $\delta'^*(q_0', \epsilon) = q_0' \equiv q_0 = \delta/_{\equiv}{}^*(q_0, \epsilon) \quad (\because L(D') = L(D/_{\equiv}))$
- **(Induction Case)** Assume $\delta'^*(q_0', a_1 \cdots a_i) \not\equiv \delta/_{\equiv}{}^*(q_0, a_1 \cdots a_i)$.
  Then, by the definition of distinguishable states,
  $\delta'^*(q_0', a_1 \cdots a_{i-1}) \not\equiv \delta/_{\equiv}{}^*(q_0, a_1 \cdots a_{i-1})$.
  But, it contradicts the induction hypothesis. $\square$

# Proof of Minimum-State DFA – Lemma

PLRG

## Lemma

*Consider a given DFA $D = (Q, \Sigma, \delta, q_0, F)$. Then, let*

- $D/_{\equiv} = (Q/_{\equiv}, \Sigma, \delta/_{\equiv}, [q_0]_{\equiv}, F/_{\equiv})$ *be its minimized DFA*
- $D' = (Q', \Sigma, \delta', q_0', F')$ *be another DFA such that* $L(D) = L(D')$

*Then, for any state $q \in Q/_{\equiv}$, we can find a state $q' \in Q'$ such that $q \equiv q'$.*

First, $\delta'^*(q_0', a_1 \cdots a_i) \equiv \delta/_{\equiv}{}^*(q_0, a_1 \cdots a_i)$ for all $0 \leq i \leq k$.

- **(Basis Case)** $\delta'^*(q_0', \epsilon) = q_0' \equiv q_0 = \delta/_{\equiv}{}^*(q_0, \epsilon) \quad (\because L(D') = L(D/_{\equiv}))$
- **(Induction Case)** Assume $\delta'^*(q_0', a_1 \cdots a_i) \not\equiv \delta/_{\equiv}{}^*(q_0, a_1 \cdots a_i)$.
  Then, by the definition of distinguishable states,
  $\delta'^*(q_0', a_1 \cdots a_{i-1}) \not\equiv \delta/_{\equiv}{}^*(q_0, a_1 \cdots a_{i-1})$.
  But, it contradicts the induction hypothesis. □

Let $w \in L(D/_{\equiv})$ s.t. $\delta/_{\equiv}(q_0, w) = q$ and $q' = \delta'(q_0', w)$.

Then, $q' \equiv q$ by the above induction. □

# Summary

1. Equivalence of Finite Automata
   - Equivalence of States ($\equiv$)
   - Distinguishable States ( $\not\equiv$ )
   - Table-Filling Algorithm
   - Equivalence of Finite Automata
   - Examples

2. Minimization of Finite Automata
   - Minimization Algorithm
   - Examples
   - Proof of Minimum-State DFA

# Exercise #4

- Please see this document for the exercise.

https://github.com/ku-plrg-classroom/docs/tree/main/cose215/dfa-eq-min

- Please implement the following functions in `Implementation.scala`.
  - `nonEqPairs` for the **table-filling algorithm**.
  - `isEqual` for the **equivalence** of DFAs.
  - `minimize` for the **minimization** of DFAs.
- It is just an exercise, and you **don't need to submit** anything.

# Next Lecture

- Context-Free Grammars (CFGs) and Languages (CFLs)

Jihyeok Park
jihyeok_park@korea.ac.kr
https://plrg.korea.ac.kr