Lecture 19 – Closure Properties of Context-Free Languages

COSE215: Theory of Computation

Jihyeok Park

PLRG

2026 Spring

Recall

- A **context-free language (CFL)** is defined in three different ways:
  - A **context free grammar (CFG)**
  - A **pushdown automaton (PDA)** with **final states**
  - A **pushdown automaton (PDA)** with **empty stacks**
- We have learned that the class of **regular languages** is **closed** under various operations. (**Closure Properties**)
- For which operations is the class of **CFLs closed**?

Contents

1. Closure Properties of Context-Free Languages
   - Union
   - Concatenation
   - Kleene Star
   - Reversal
   - Homomorphism
   - Inverse Homomorphism
2. Non-Closure Properties of Context-Free Languages
   - Intersection
   - Complement and Difference
3. Closure Properties of CFLs with Regular Languages
   - Intersection with Regular Languages
   - Difference with Regular Languages

Contents

1. Closure Properties of Context-Free Languages
   - Union
   - Concatenation
   - Kleene Star
   - Reversal
   - Homomorphism
   - Inverse Homomorphism

2. Non-Closure Properties of Context-Free Languages
   - Intersection
   - Complement and Difference

3. Closure Properties of CFLs with Regular Languages
   - Intersection with Regular Languages
   - Difference with Regular Languages

Closure Properties of CFLs

PLRG

Definition (Closure Properties)

The class of CFLs is **closed** under an n-ary operator op if and only if $\mathrm{op}(L_1, \cdots, L_n)$ is context-free for any CFLs $L_1, \cdots, L_n$. We say that such properties are **closure properties** of CFLs.

The class of CFLs is closed under the following operations:

- Union
- Concatenation
- Kleene Star
- Reverse
- Homomorphism
- Inverse Homomorphism

Closure under Union

PLRG

Theorem (Closure under Union)

If L_1 and L_2 are context-free languages, then so is $L_1 \cup L_2$.

Proof) For given two CFLs L_1 and L_2, we can always construct two CFGs:

$$G_1 = (V_1, \Sigma, S_1, R_1)$$
$$G_2 = (V_2, \Sigma, S_2, R_2)$$

such that $L_1 = L(G_1)$ and $L_2 = L(G_2)$.
Note that the variables of G_1 and G_2 should be disjoint. (i.e., $V_1 \cap V_2 = \varnothing$)
Then, $L_1 \cup L_2$ is accepted by the CFG $G = (V, \Sigma, S, R)$ where:

- $V = V_1 \cup V_2 \cup \{S\}$
- S is a new start variable (i.e., $S \notin V_1 \cup V_2$)
- $R = R_1 \cup R_2 \cup \{S \to S_1, S \to S_2\}$

□

Closure under Union – Example

For example, consider the following two CFLs:

$$L_1 = \{\mathtt{ab}^n \mid n \geq 0\} \qquad L_2 = \{\mathtt{ac}^n \mid n \geq 0\}$$

Then, L_1 is accepted by:

$$S_1 \to \mathtt{a}X \qquad X \to \mathtt{b}X \mid \epsilon$$

and L_2 is accepted by:

$$S_2 \to \mathtt{a}X \qquad X \to \mathtt{c}X \mid \epsilon$$

But, the same variable X is used in both grammars.
So, we need to rename it to different variables, such as B and C.

Closure under Union – Example

For example, consider the following two CFLs:

$$L_1 = \{\mathtt{ab}^n \mid n \geq 0\} \qquad L_2 = \{\mathtt{ac}^n \mid n \geq 0\}$$

Then, L_1 is accepted by:

$$S_1 \to \mathtt{a}B \qquad B \to \mathtt{b}B \mid \epsilon$$

and L_2 is accepted by:

$$S_2 \to \mathtt{a}C \qquad C \to \mathtt{c}C \mid \epsilon$$

Then, $L_1 \cup L_2$ is accepted by the following CFG:

$$\begin{aligned} S &\to S_1 \mid S_2 \\ S_1 &\to \mathtt{a}B \qquad & B &\to \mathtt{b}B \mid \epsilon \\ S_2 &\to \mathtt{a}C \qquad & C &\to \mathtt{c}C \mid \epsilon \end{aligned}$$

Closure under Concatenation

Theorem (Closure under Concatenation)

If L_1 and L_2 are context-free languages, then so is $L_1 \cdot L_2$.

Proof) For given two CFLs L_1 and L_2, we can always construct two CFGs:

$$G_1 = (V_1, \Sigma, S_1, R_1)$$
$$G_2 = (V_2, \Sigma, S_2, R_2)$$

such that $L_1 = L(G_1)$ and $L_2 = L(G_2)$.
Note that the variables of G_1 and G_2 should be disjoint. (i.e., $V_1 \cap V_2 = \varnothing$)
Then, $L_1 \cdot L_2$ is accepted by the CFG $G = (V, \Sigma, S, R)$ where:

- $V = V_1 \cup V_2 \cup \{S\}$
- S is a new start variable (i.e., $S \notin V_1 \cup V_2$)
- $R = R_1 \cup R_2 \cup \{S \to S_1 S_2\}$

$\square$

Closure under Concatenation – Example

For example, consider the following two CFLs:

$$L_1 = \{\mathtt{ab}^n \mid n \geq 0\} \qquad L_2 = \{\mathtt{ac}^n \mid n \geq 0\}$$

Then, L_1 is accepted by:

$$S_1 \to \mathtt{a}B \qquad B \to \mathtt{b}B \mid \epsilon$$

and L_2 is accepted by:

$$S_2 \to \mathtt{a}C \qquad C \to \mathtt{c}C \mid \epsilon$$

Then, $L_1 \cdot L_2$ is accepted by the following CFG:

$$\begin{aligned} S &\to S_1 S_2 \\ S_1 &\to \mathtt{a}B \qquad & B &\to \mathtt{b}B \mid \epsilon \\ S_2 &\to \mathtt{a}C \qquad & C &\to \mathtt{c}C \mid \epsilon \end{aligned}$$

Closure under Kleene Star

PLRG

Theorem (Closure under Kleene Star)

If L is a context-free language, then so is L^*.

Proof) For a given CFL L, we can always construct a CFG:

$$G = (V, \Sigma, S, R)$$

such that $L = L(G)$.
Then, L^* is accepted by the CFG $G' = (V', \Sigma, S', R')$ where:

- $V' = V \cup \{S'\}$
- S' is a new start variable (i.e., $S' \notin V$)
- $R' = R \cup \{S' \to \epsilon, S' \to SS'\}$

$\square$

Closure under Kleene Star – Example

For example, consider the following CFL:

$$L = \{\mathtt{a}^n\mathtt{b}^n \mid n \geq 0\}$$

Then, L is accepted by:

$$S \to \epsilon \mid \mathtt{a}S\mathtt{b}$$

Then, L^* is accepted by the following CFG:

$$\begin{aligned} S' &\to \epsilon \mid SS' \\ S &\to \epsilon \mid \mathtt{a}S\mathtt{b} \end{aligned}$$

Closure under Reverse

PLRG

Theorem (Closure under Reverse)

If L is a context-free language, then so is L^R.

Proof) For a given CFL L, we can always construct a CFG:

$$G = (V, \Sigma, S, R)$$

such that $L = L(G)$.
Then, L^R is accepted by the CFG $G' = (V, \Sigma, S, R')$ where:

- $R' = \{X \to \alpha^R \mid X \to \alpha \in R\}$

$\square$

Closure under Reverse – Example

For example, consider the following CFL:

$$L = \{(\mathtt{ab})^n \mathtt{c}^n \mathtt{d}^m \mid n, m \geq 0\}$$

Then, L is accepted by:

$$\begin{aligned} S &\to X \mid S\mathtt{d} \\ X &\to \epsilon \mid \mathtt{ab}X\mathtt{c} \end{aligned}$$

Then, L^R is accepted by the following CFG:

$$\begin{aligned} S &\to X \mid \mathtt{d}S \\ X &\to \epsilon \mid \mathtt{c}X\mathtt{ba} \end{aligned}$$

Closure under Homomorphism

Let's recall the definition of a **homomorphism**.

Definition (Homomorphism)

Suppose Σ_0 and Σ_1 are two finite sets of symbols. Then, a function

$$h : \Sigma_0 \to \Sigma_1^*$$

is called a **homomorphism**. For a given word $w = \mathtt{a}_1\mathtt{a}_2 \cdots \mathtt{a}_n \in \Sigma_0^*$,

$$h(w) = h(\mathtt{a}_1)h(\mathtt{a}_2) \cdots h(\mathtt{a}_n)$$

For a language $L \subseteq \Sigma_0^*$,

$$h(L) = \{h(w) \mid w \in L\} \subseteq \Sigma_1^*$$

Example

Let $\Sigma_0 = \{0, 1\}$, $\Sigma_1 = \{\mathtt{a}, \mathtt{b}\}$, and $h(0) = \mathtt{ab}$, $h(1) = \mathtt{a}$. Then,

$$h(10) = \mathtt{aab} \qquad h(010) = \mathtt{abaab} \qquad h(1100) = \mathtt{aaabab}$$

Closure under Homomorphism

PLRG

Theorem (Closure under Homomorphism)

If h is a homomorphism and L is a context-free language, then so is $h(L)$.

Proof) For a given CFL L, we can always construct a CFG:

$$G = (V, \Sigma_0, S, R)$$

such that $L = L(G)$.
Then, for a given homomorphism $h : \Sigma_0 \to \Sigma_1^*$, $h(L)$ is accepted by the CFG $G' = (V', \Sigma_1, S, R')$ where:

- $V' = V \cup \{X_a \mid a \in \Sigma_0\}$
- $R' = \{Y \to Y_1' \cdots Y_n' \mid Y \to Y_1 \cdots Y_n \in R\} \cup \{X_a \to h(a) \mid a \in \Sigma_0\}$
  where $\forall 1 \leq i \leq n.\ Y_i' = \begin{cases} Y_i & \text{if } Y_i \in V \\ X_a & \text{if } Y_i = a \in \Sigma_0 \end{cases}$

$\square$

Closure under Homomorphism – Example

For example, consider the following CFL:

$$L = \{ww^R \mid w \in \{0,1\}^*\}$$

Then, L is accepted by:

$$S \to \epsilon \mid 0S0 \mid 1S1$$

If a homomorphism $h : \{0,1\} \to \{\mathtt{a},\mathtt{b}\}^*$ is defined as follows:

$$h(0) = \mathtt{ab} \qquad h(1) = \mathtt{a}$$

Then, $h(L)$ is accepted by the following CFG:

$$\begin{aligned} S &\to \epsilon \mid X_0SX_0 \mid X_1SX_1 \\ X_0 &\to \mathtt{ab} \\ X_1 &\to \mathtt{a} \end{aligned}$$

Closure under Inverse Homomorphism

Let's recall the definition of an **inverse homomorphism**.

Definition (Inverse Homomorphism)

Suppose Σ_0 and Σ_1 are two finite sets of symbols. For a given language $L \subseteq \Sigma_1^*$ and a homomorphism $h : \Sigma_0 \to \Sigma_1^*$,

$$h^{-1}(L) = \{w \in \Sigma_0^* \mid h(w) \in L\} \subseteq \Sigma_0^*$$

Example

Let $\Sigma_0 = \{0, 1\}$, $\Sigma_1 = \{\mathtt{a}, \mathtt{b}\}$, and $h(0) = \mathtt{aa}$, $h(1) = \mathtt{b}$. Consider the following language $L \subseteq \Sigma_1^*$:

$$L = \{\mathtt{a}^n\mathtt{b}^n \mid n \geq 1\}$$

Then, $011 \in h^{-1}(L)$ because $h(011) = \mathtt{aabb} \in L$.

However, $10 \notin h^{-1}(L)$ because $h(10) = \mathtt{baa} \notin L$.

Closure under Inverse Homomorphism

PLRG

Theorem (Closure under Inverse Homomorphism)

If $h : \Sigma_0 \to \Sigma_1^*$ is a homomorphism and $L \subseteq \Sigma_1^*$ is a context-free language, then so is $h^{-1}(L)$.

Proof) Consider a PDA $P = (Q, \Sigma_1, \Gamma, \delta, q_0, Z, F)$ for L by final states.

The key idea is to construct a new PDA P' that simulates P with pairs of 1) states and 2) remaining symbols of Σ_1 as new states.

Then, a PDA $P' = (Q \times h(\Sigma_0)_{\succeq}, \Sigma_0, \Gamma, \delta', (q_0, \epsilon), Z, F \times \{\epsilon\})$ accepts $h^{-1}(L)$ by final states where:

- $A_{\succeq} = \{x \in \Sigma_1^* \mid x \text{ is a suffix of } w \in A\}$ for any $A \subseteq \Sigma_1^*$
- For all $a \in \Sigma_0$, $q \in Q$, and $X \in \Sigma_1$,

$$\delta'((q, \epsilon), a, X) = \{((q, h(a)), X)\}$$

- For all $b \in \Sigma_1 \cup \{\epsilon\}$, $bx \in h(\Sigma_0)_{\succeq}$, $q \in Q$, and $X \in \Sigma_1$,

$$\delta'((q, bx), \epsilon, X) = \{((p, x), \gamma) \mid (p, \gamma) \in \delta(q, b, X)\}$$

Closure under Inverse Homomorphism – Example

For example, consider the following PDA:

$P =$

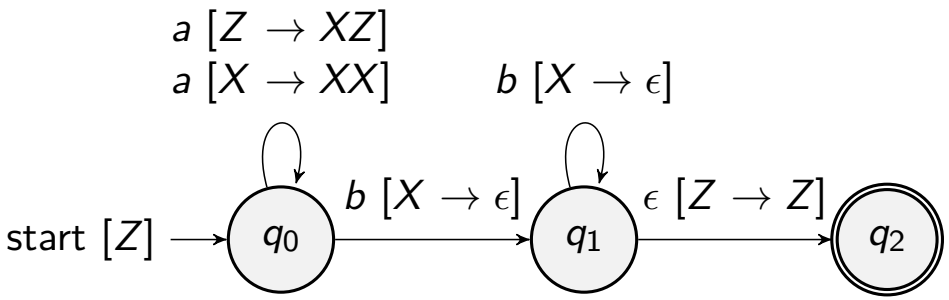

that accepts $L = \{a^n b^n \mid n \geq 1\}$ by final states.

If a homomorphism $h : \{0, 1\} \to \{\mathtt{a}, \mathtt{b}\}^*$ is defined as follows:

$$h(0) = \mathtt{aa} \qquad h(1) = \mathtt{b}$$

Closure under Inverse Homomorphism – Example

$P =$

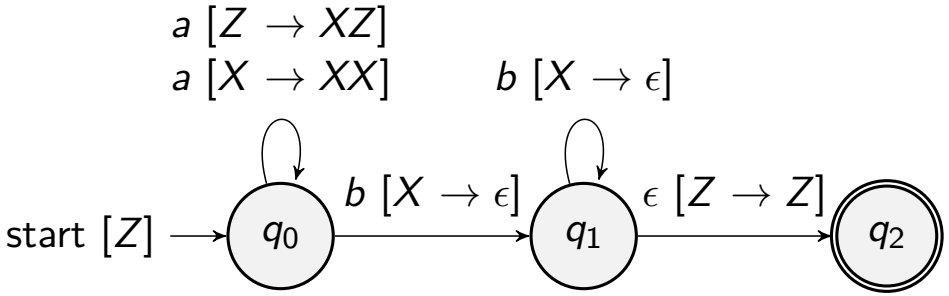

$h(0) = \texttt{aa}$ $\quad$ $h(1) = \texttt{b}$

Then, the following PDA accepts $h^{-1}(L)$ by final states:

$P' =$

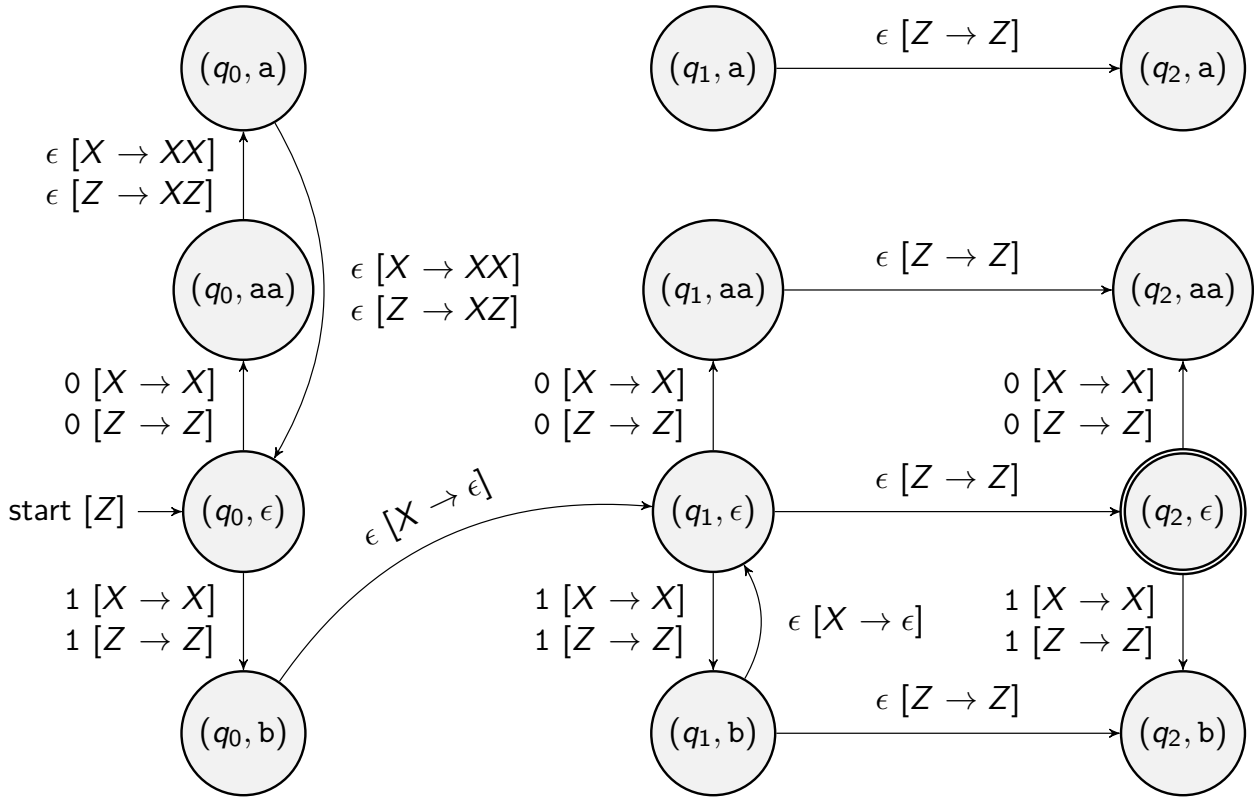

Contents

1. Closure Properties of Context-Free Languages
   - Union
   - Concatenation
   - Kleene Star
   - Reversal
   - Homomorphism
   - Inverse Homomorphism

2. Non-Closure Properties of Context-Free Languages
   - Intersection
   - Complement and Difference

3. Closure Properties of CFLs with Regular Languages
   - Intersection with Regular Languages
   - Difference with Regular Languages

Non-Closure Properties of CFLs

PLRG

Definition (Closure Properties)

The class of CFLs is **closed** under an n-ary operator op if and only if $\mathrm{op}(L_1, \cdots, L_n)$ is context-free for any CFLs $L_1, \cdots, L_n$. We say that such properties are **closure properties** of CFLs.

The class of CFLs is **NOT** closed under the following operations:

- Intersection
- Complement
- Difference

We will prove it by using the fact that the following language is not a CFL:

$$L = \{\mathrm{a}^n \mathrm{b}^n \mathrm{c}^n \mid n \geq 0\}$$

We will learn how to prove that L is not a CFL in the next lecture (Pumping Lemma for CFLs).

Non-Closure under Intersection

PLRG

Theorem (Non-Closure under Intersection)

The class of CFLs is **NOT** *closed under intersection.*

Proof) Consider the following two languages:

$$L_1 = \{\mathtt{a}^n\mathtt{b}^n\mathtt{c}^m \mid n, m \geq 0\} \qquad L_2 = \{\mathtt{a}^m\mathtt{b}^n\mathtt{c}^n \mid n, m \geq 0\}$$

Then, L_1 is accepted by:

$$S_1 \to X \mid S_1\mathtt{c} \qquad X \to \epsilon \mid \mathtt{a}X\mathtt{b}$$

and L_2 is accepted by:

$$S_2 \to Y \mid \mathtt{a}S_2 \qquad Y \to \epsilon \mid \mathtt{b}Y\mathtt{c}$$

Thus, they are both CFLs. However, their intersection is not a CFL:

$$L_1 \cap L_2 = \{\mathtt{a}^n\mathtt{b}^n\mathtt{c}^n \mid n \geq 0\}$$

□

Non-Closure under Complement and Difference

PLRG

Theorem (Non-Closure under Complement)

The class of CFLs is **NOT** *closed under complement.*

Proof) Assume that the class of CFLs is closed under complement. Then, for any two CFLs L_1 and L_2, $L_1 \cap L_2$ is also a CFL:

$$L_1 \cap L_2 = \overline{\overline{L_1} \cup \overline{L_2}}$$

However, we have already proved that the class of CFLs is not closed under intersection. Thus, the class of CFLs is not closed under complement. □

Theorem (Non-Closure under Difference)

The class of CFLs is **NOT** *closed under difference.*

Proof) Similarly, we can prove it using the following fact:

$$L_1 \cap L_2 = L_1 \setminus (L_1 \setminus L_2)$$

□

Contents

1. Closure Properties of Context-Free Languages
   - Union
   - Concatenation
   - Kleene Star
   - Reversal
   - Homomorphism
   - Inverse Homomorphism

2. Non-Closure Properties of Context-Free Languages
   - Intersection
   - Complement and Difference

3. Closure Properties of CFLs with Regular Languages
   - Intersection with Regular Languages
   - Difference with Regular Languages

Closure Properties of CFLs with Regular Languages

PLRG

Definition (Closure Properties)

The class of CFLs is **closed** under an n-ary operator op if and only if $\mathrm{op}(L_1, \cdots, L_n)$ is context-free for any CFLs $L_1, \cdots, L_n$. We say that such properties are **closure properties** of CFLs.

The class of CFLs is closed under the following operations with RLs:

- Intersection
- Difference

Closure under Intersection with RLs

Theorem (Closure under Intersection with RLs)

If L_1 Is a CFL and L_2 is a RL, then $L_1 \cap L_2$ is a CFL.

There exists a PDA P that accepts L_1 by final states and a DFA D that accepts L_2. We will construct a PDA P' that accepts $L_1 \cap L_2$ as follows:

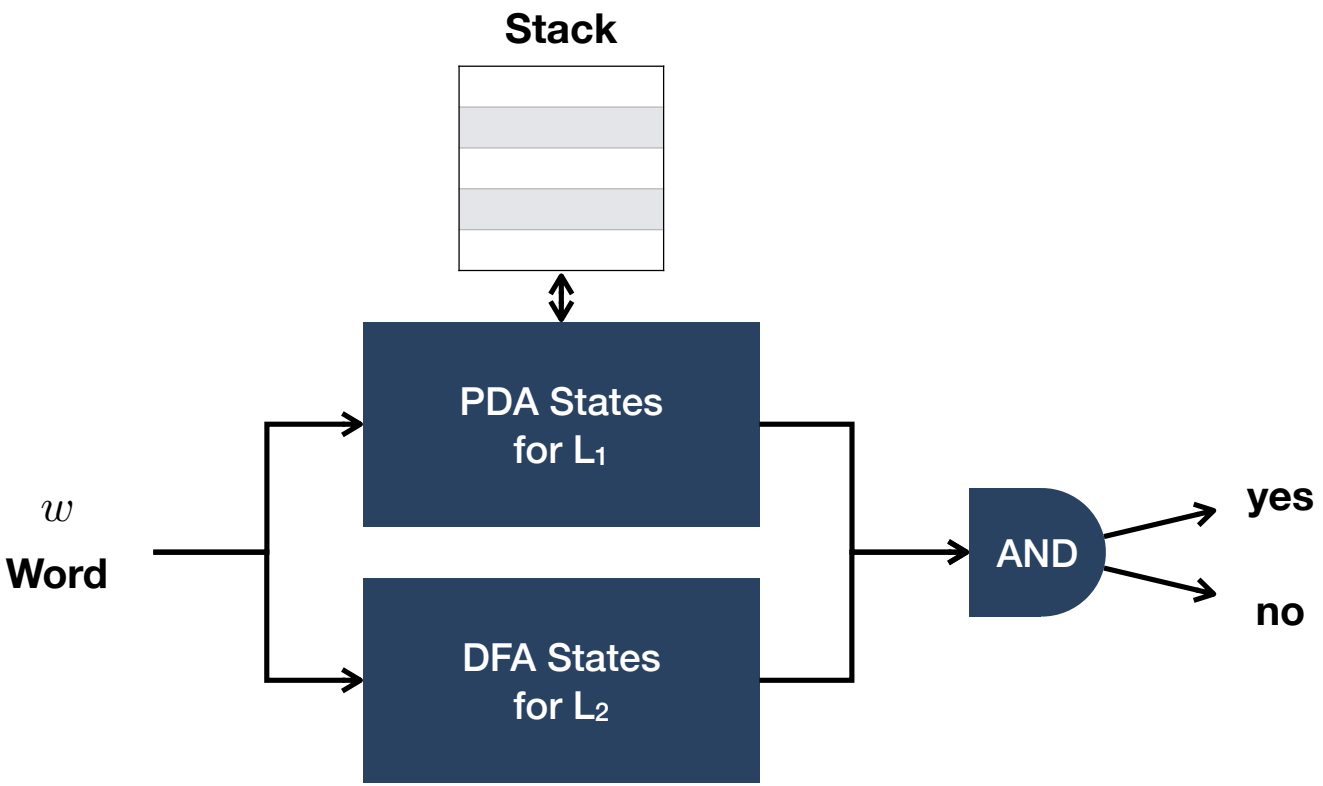

Closure under Intersection with RLs

Theorem (Closure under Intersection with RLs)

If L_1 Is a CFL and L_2 is a RL, then $L_1 \cap L_2$ is a CFL.

Proof) Consider a PDA $P = (Q_P, \Sigma, \Gamma, \delta_P, q_P, Z, F_P)$ and a DFA $D = (Q_D, \Sigma, \delta_D, q_D, F_D)$ such that:

$$L_F(P) = L_1 \qquad L(D) = L_2$$

Then, $L_1 \cap L_2$ is accepted by the PDA $P' = (Q, \Sigma, \Gamma, \delta, q_0, Z, F)$ by final states, where:

- $Q = Q_P \times Q_D$
- $\delta((p, q), \epsilon, X) = \{((p', q), \alpha) \mid (p', \alpha) \in \delta_P(p, \epsilon, X)\}$
- $\delta((p, q), a, X) = \{((p', q'), \alpha) \mid (p', \alpha) \in \delta_P(p, a, X) \wedge q' = \delta_D(q, a)\}$
- $q_0 = (q_P, q_D)$
- $F = F_P \times F_D$

$\square$

Closure under Intersection with RLs – Example

For example, consider the following PDA P and DFA D:

$P =$

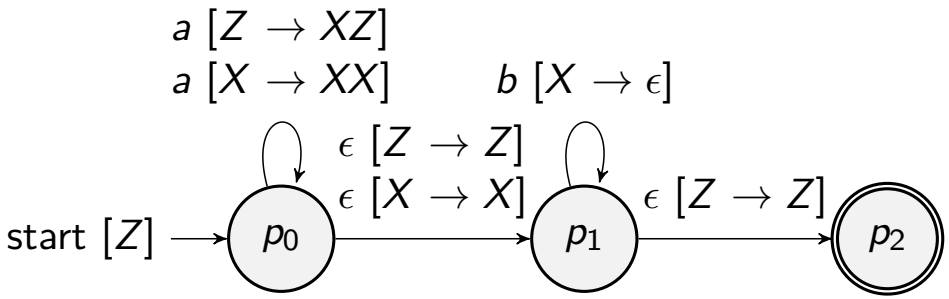

$D =$

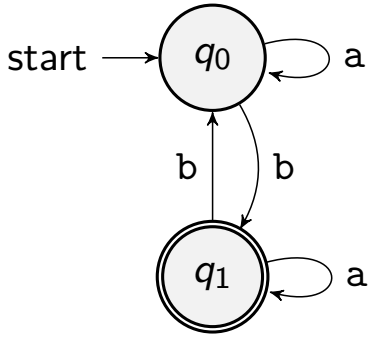

Then, a PDA P' that accepts $L_F(P) \cap L(D)$ by the final states can be constructed as follows:

$P' =$

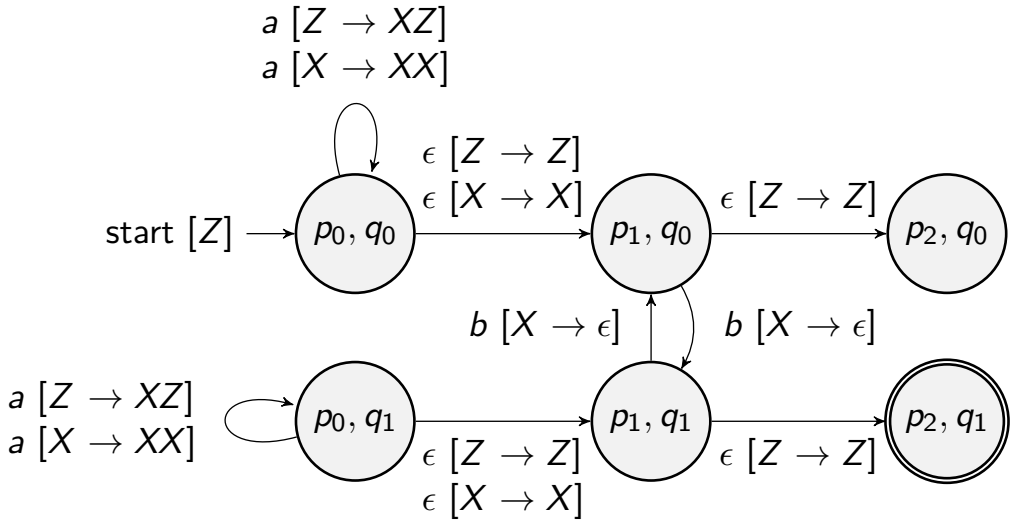

Closure under Difference with RLs

Theorem (Closure under Difference with RLs)

If L_1 Is a CFL and L_2 is a RL, then $L_1 \setminus L_2$ is a CFL.

Proof) We know the following fact:

$$L_1 \setminus L_2 = L_1 \cap \overline{L_2}$$

Since the class of RLs is closed under complement, $\overline{L_2}$ is a RL. In addition, we know that the class of CFLs is closed under intersection with RLs. Thus, $L_1 \setminus L_2$ is a CFL. □

Closure under Difference with RLs – Example

For example, consider the following PDA P and DFA D:

$P =$

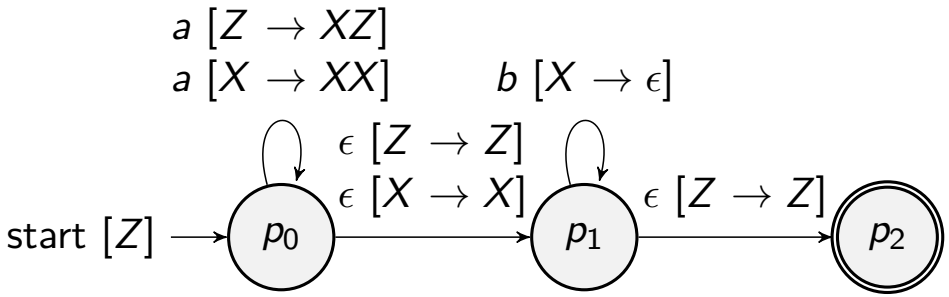

$D =$

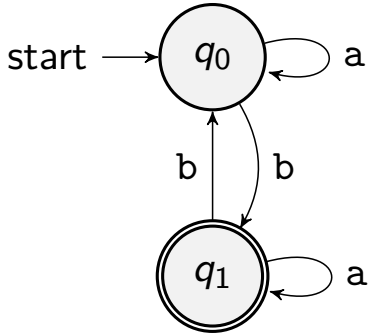

Then, a DFA $\overline{D}$ that accepts $\overline{L(D)}$ and a PDA P' that accepts $L_F(P) \setminus L(D) = L_F(P) \cap \overline{L(D)}$ can be constructed as follows:

$\overline{D} =$

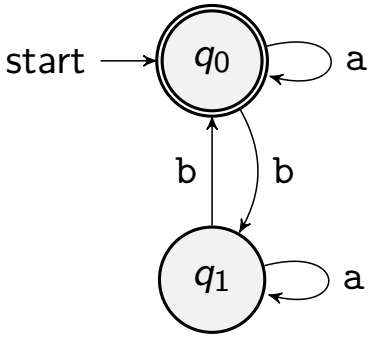

$P' =$

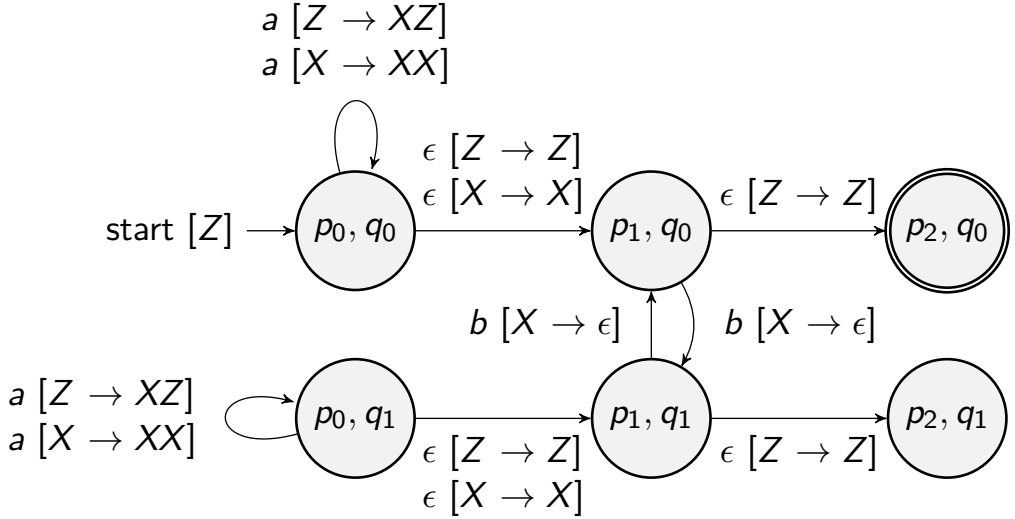

Summary

1. Closure Properties of Context-Free Languages
   - Union
   - Concatenation
   - Kleene Star
   - Reversal
   - Homomorphism
   - Inverse Homomorphism
2. Non-Closure Properties of Context-Free Languages
   - Intersection
   - Complement and Difference
3. Closure Properties of CFLs with Regular Languages
   - Intersection with Regular Languages
   - Difference with Regular Languages

Next Lecture

- The Pumping Lemma for Context-Free Languages

Jihyeok Park
jihyeok_park@korea.ac.kr
https://plrg.korea.ac.kr