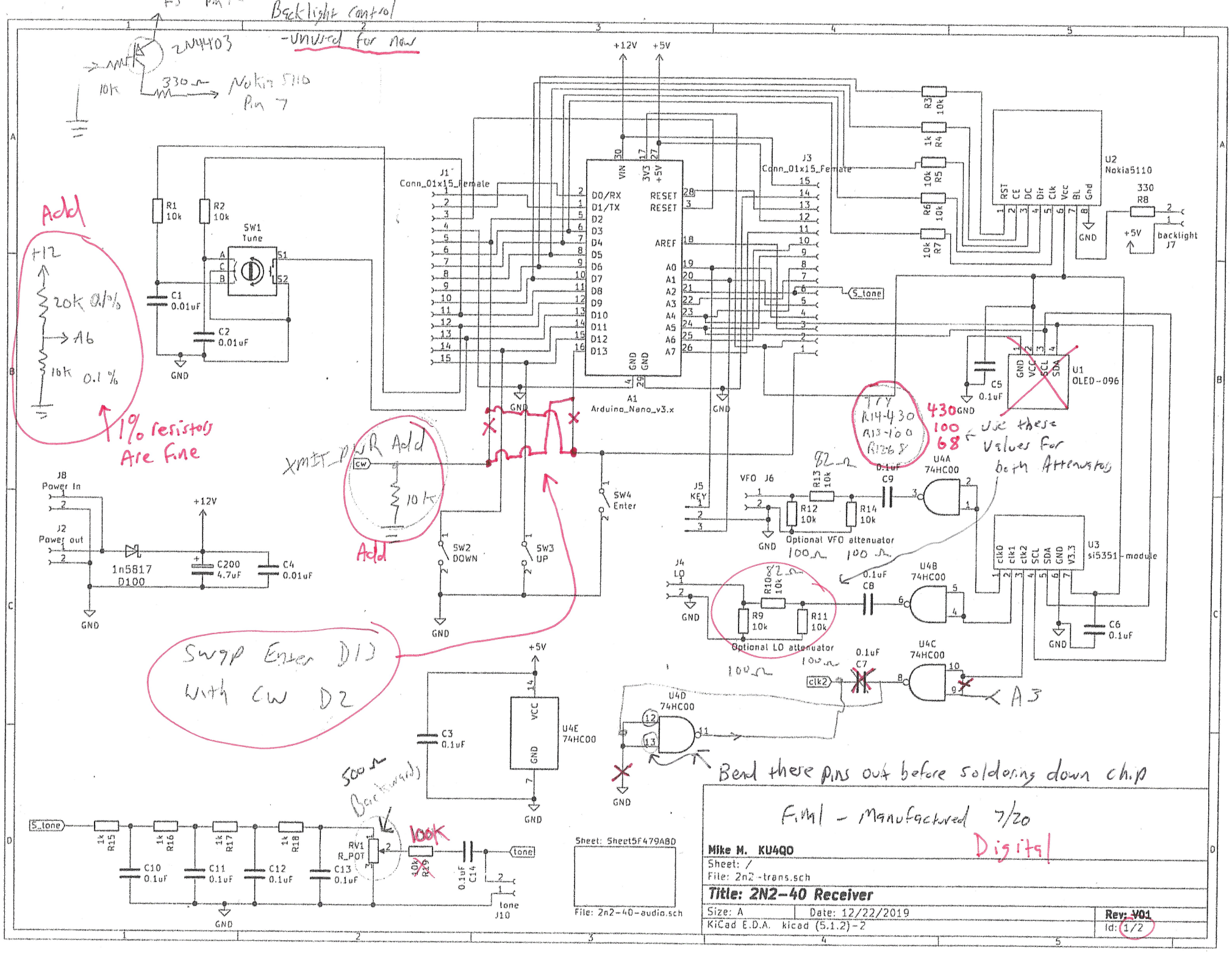
Backlight control
-unused for now
2N4403
10k
330
Nokia 5110
Pin 7
Add
+12
20k 0.1%
A6
10k 0.1 %
1% resistors
Are fine
XMIT_PWR Add
CW
10 k
Add
Swap Enter D13
with CW D2
Try
R14-430
R13-100
R12-68
430
100
68
use these
values for
both Attenuators
Bend these pins out before soldering down chip
Final - Manufactured 7/20
Digital
Mike M. KU4QO
Sheet: /
File: 2n2-trans.sch
Title: 2N2-40 Receiver
Size: A
Date: 12/22/2019
KiCad E.D.A. kicad (5.1.2)-2
Rev: V01
Id: 1/2
Sheet: Sheet5F479ABD
File: 2n2-40-audio.sch
J1
Conn_01x15_Female
J3
Conn_01x15_Female
A1
Arduino_Nano_v3.x
U2
Nokia5110
U1
OLED-096
U3
si5351-module
U4A
74HCOO
U4B
74HCOO
U4C
74HCOO
U4D
74HCOO
U4E
74HCOO
J8
Power In
J2
Power out
1n5817
D100
C200
4.7uF
C4
0.01uF
SW1
Tune
SW2
DOWN
SW3
UP
SW4
Enter
J5
KEY
VFO J6
Optional VFO attenuator
J4
LO
Optional LO attenuator
J7
backlight
J10
tone
S_tone
RV1
R_POT
100K
500 Backwards
GND
+12V
+5V

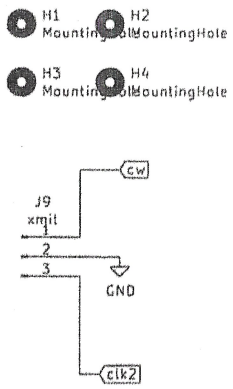

Digital

Sheet: /Sheet5F479ABD/
File: 2n2-40-audio.sch

Title:

Size: A	Date:	Rev:
KiCad E.D.A. kicad (5.1.2)-2		Id: 2/2

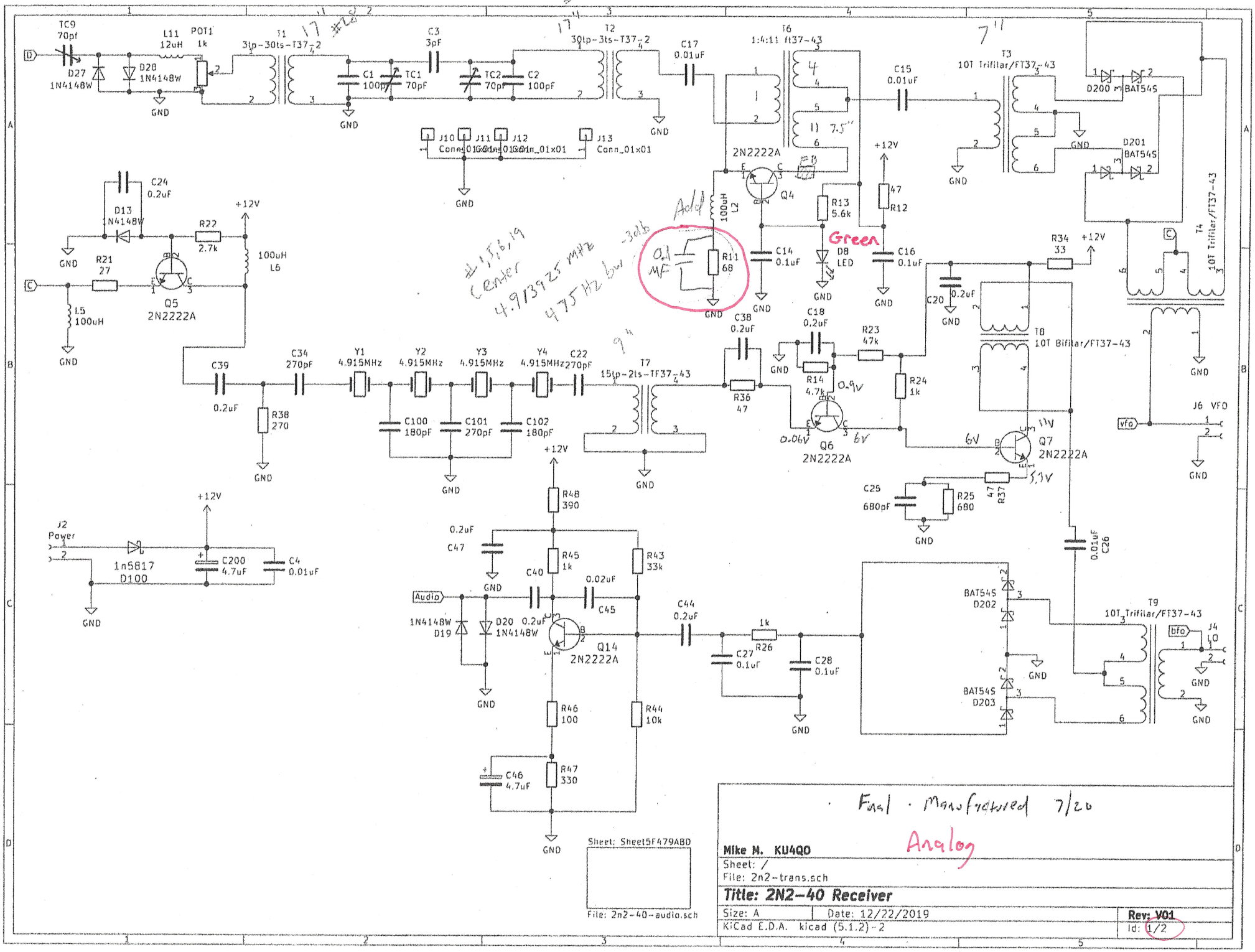
TC9 70pf
D27 1N4148W
D28 1N4148W
L11 12uH
POT1 1k
T1 3tp-30ts-T37-2
C1 100pF
TC1 70pF
C3 3pF
TC2 70pF
C2 100pF
T2 30tp-3ts-T37-2
C17 0.01uF
T6 1:4:11 ft37-43
C15 0.01uF
T3 10T Trifilar/FT37-43
D200 BAT54S
D201 BAT54S
T4 10T Trifilar/FT37-43
J10 Conn_01x01
J11 Conn_01x01
J12 Conn_01x01
J13 Conn_01x01
2N2222A
Q4
R13 5.6k
R12 47
D8 LED
Green
C14 0.1uF
C16 0.1uF
100uH L2
R11 68
Add 0.1 uF
C24 0.2uF
D13 1N4148W
R22 2.7k
R21 27
L5 100uH
Q5 2N2222A
100uH L6
#15,16,19 Center 4.913925 mHz 4.75 Hz bw -3db
R34 33
C20 0.2uF
T8 10T Bifilar/FT37-43
C38 0.2uF
C18 0.2uF
R23 47k
R14 4.7k
R36 47
R24 1k
Q6 2N2222A
Q7 2N2222A
C25 680pF
R25 680
R37 47
C39 0.2uF
C34 270pF
Y1 4.915MHz
Y2 4.915MHz
Y3 4.915MHz
Y4 4.915MHz
C22 270pF
T7 15tp-2ts-TF37-43
R38 270
C100 180pF
C101 270pF
C102 180pF
J6 VFO
J2 Power
1n5817 D100
C200 4.7uF
C4 0.01uF
R48 390
C47 0.2uF
R45 1k
R43 33k
C40
C45 0.02uF
Audio
1N4148W D19
D20 1N4148W
Q14 2N2222A
C44 0.2uF
R26 1k
C27 0.1uF
C28 0.1uF
R46 100
R44 10k
C46 4.7uF
R47 330
C26 0.01uF
BAT54S D202
BAT54S D203
T9 10T Trifilar/FT37-43
J4 LO
Sheet: Sheet5F479ABD
File: 2n2-40-audio.sch
Final Manufactured 7/20
Analog
Mike M. KU4QO
Sheet: /
File: 2n2-trans.sch
Title: 2N2-40 Receiver
Size: A
Date: 12/22/2019
KiCad E.D.A. kicad (5.1.2)-2
Rev: V01
Id: 1/2

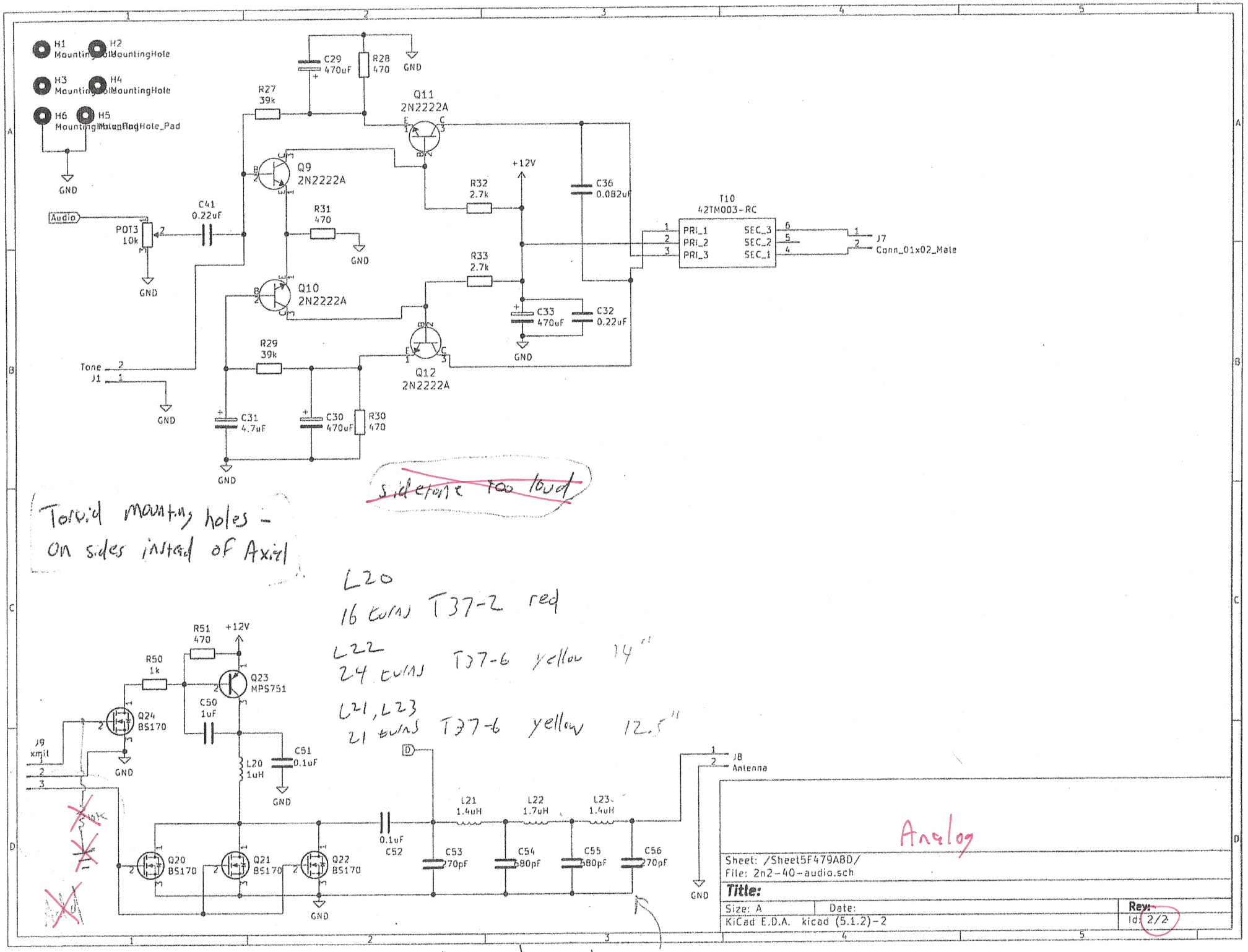

~~sidetone too loud~~

Toroid mounting holes - on sides instead of Axial

L20
16 turns T37-2 red

L22
24 turns T37-6 yellow 14"

L21, L23
21 turns T37-6 yellow 12.5"

Analog

Low inductor holes