公司简介
COMPANY PROFILE

芯控源(AGMsemi)成立于2015年，

- 专注于IGBT/FRD和SiC MOSFET/硅基功率MOSFET研发的高科技公司，致力于实现高端功率器件的国产替代。(特色–高频– 应用)
- 产品重点：面向人型机器人、AI智能、新能源车、光伏和储能领域。
- 产品广泛应用于PD快充、无刷电机、同步整流电源、BMS、充电桩、绿色照明等、工业领域。
- 从业经验15–25年，团队来自头部晶圆厂(华虹、中芯、积塔、Diodes)。
- 晶圆代工厂（华虹、万国、芯恩、粤芯）。
- 芯控源（AGMsemi)专注于高能效功率半导体器件的创新研发，力争为客户提供更优质的服务，创造更高的价值。

企业愿景

缔造中国领先的半导体企业
体现AGMSEMI的品牌价值

企业使命

致力于发展成为国际功率
器件主要供应商

核心价值观

以客户为中心 以奋斗者为中心
以技术质量为生命

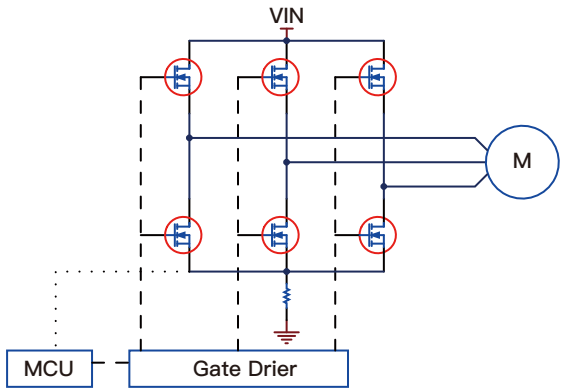

TEL:0755–82580824 FAX:0755–88324407
Email:xkydz@agm–mos.com
网址：www.agm–mos.com
地址：深圳市龙岗区坂田街道赣锋科技大厦B栋13楼

AGMSEMI

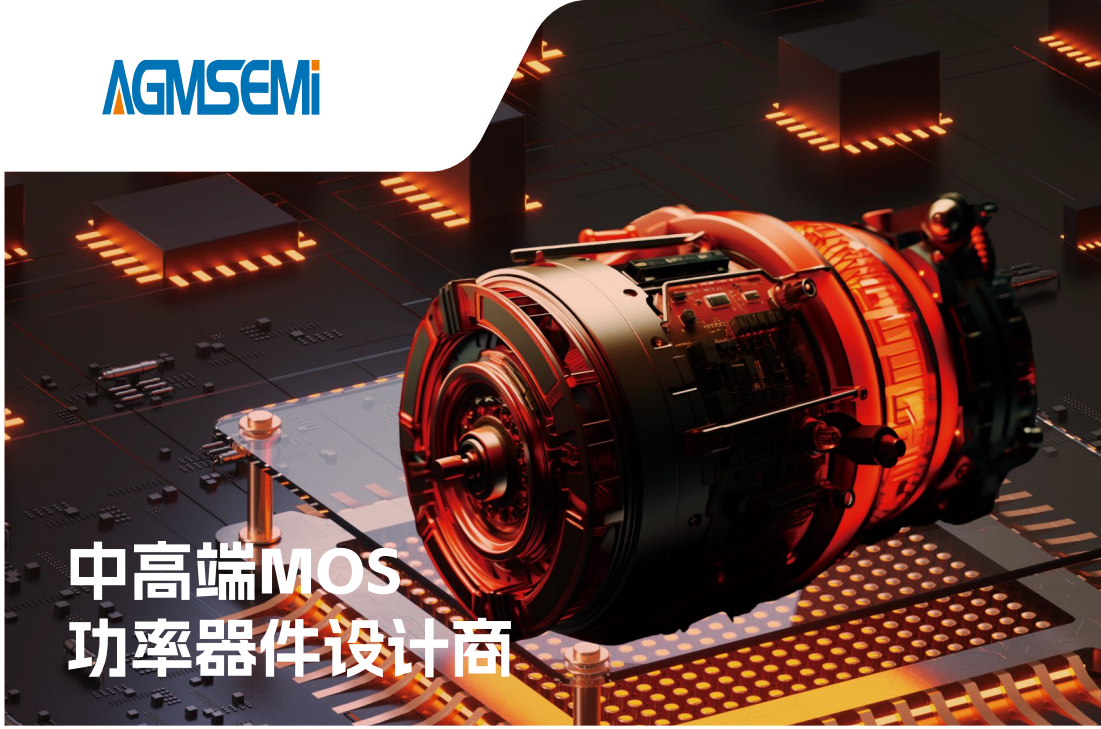

AGMSEMI 无刷电机（BLDC）——选型手册

- 专注于MOSFET功率半导体
- 深耕于无刷电机（BLDC）
- 满足您所有MOSFET选型

深圳市芯控源电子科技有限公司
Shenzhen AGMSEMI Electronic Technology Co. , Ltd.

N+P、N+N复合管

Part NO	Vdss(v)	Id(A)	RdsON(mΩ)	Package	Channel
AGM205ME	±20	5.0/-3.6	22/55	SOT23-6L	N+P
AGM216ME	±20	3.3/-5.6	21/27.5	SOT23-6L	N+P
AGM210MAP	±20	±25	12/17	PDFN3.3×3.3	N+P
AGM218MAP	±20	20/-19	16/24	PDFN3.3×3.3	N+P
AGM308MAR	±30	±42	7/10	PDFN5*6	N+P
AGM308MA	±30	±30	11/12	PDFN5*6	N+P
AGM310MAR	±30	23/-25	11/18	PDFN5*6	N+P
AGM310MA	±30	23/-18	11/24	PDFN5*6	N+P
AGM310MD	±30	23/-18	11/22	TO-252-4L	N+P
AGM310MAP	±30	20/-18	11/19	PDFN3.3*3.3	N+P
AGM310M	±30	±12	12/16	SOP8	N+P
AGM312M1	±30	9.0/-7.2	12/30	SOP8	N+P
AGM312M2	±30	9/-6.8	18/37	SOP8	N+P
AGM312MAP	±30	±18	14/34	PDFN3.3×3.3	N+P
AGM314MD	±30	30/-20	10/21	TO-252-4L	N+P
AGM314MA	±30	30/-20	10/21	PDFN5*6	N+P
AGM314MAP	±30	30/-20	10/18.5	PDFN3.3×3.3	N+P
AGM318MAP	±30	20/-18	17/23	PDFN3.3×3.3	N+P
AGM320M	±30	8.0/-6.8	19.5/48	SOP8	N+P
AGM320ME	±30	3.6/-2.0	23/61	SOT23-6L	N+P
AGML315ME	±30	5.6/-4.2	25/43	SOT23-6L	N+P
AGM412MPA	±40	40/-45	10/12	PDFN5*6	N+P
AGM418MAP	±40	±18	18/20	PDFN3.3*3.3	N+P
AGM420MD	±40	23/-22	18/26	TO-252-4L	N+P
AGM420MA	±40	23/-22	18/26	PDFN5*6	N+P
AGM420MAP	±40	13.5/-10.8	16/42	PDFN3.3*3.3	N+P
AGM420MC	±40	7.6/-7.5	18/26	SOP8	N+P
AGM420MBA	±40	8.5/-6.8	18/40	SOP8	N+P
AGM425M	±40	6.6/-5.5	18/50	SOP8	N+P
AGM425ME	±40	6.6/-3.3	25/65.5	SOT23-6L	N+P
AGM628M	±60	6.8/-5.7	30/53	SOP8	N+P
AGM618MA	±60	±40	18/23	PDFN5X6	N+P
AGM628MD	±60	30/-25	28/41	TO-252-4L	N+P
AGM628MA	±60	±25	28/41	PDFN5*6	N+P
AGM628MAP	±60	±21	30/44	PDFN3.3*3.3	N+P

N+P、N+N复合管

Part NO	Vdss(v)	Id(A)	RdsON(mΩ)	Package	Channel
AGM628M1	±60	6.0/-4.2	27/70	SOP8	N+P
AGM1030MA	±100	20/-15	25/95	PDFN5×6	N+P
AGM1095MA	±100	2.7/-2.5	120/150	PDFN5×6	N+P
AGM1095MAP	±100	7.0/-6.0	96/220	PDFN3.3×3.3	N+P
AGM1095M	±100	7.0/-6.0	100/240	SOP8	N+P
AGM1065M	±100	10/-9.0	87/115	SOP8	N+P
AGM306MA	±30	40	6.8	PDFN5X6	N+N
AGM615MNA	±60	53	10	PDFN5X6	N+N
AGM1095MN	±100	6.8	95	SOP8	N+N

3N+3P、3N复合管

Part NO	Vdss(v)	Id(A)	RdsON(mΩ)	Package	Channel
AGM210M6	±20	±20	12/18	DFN5X6-12L	3N+3P
AGM208M6	±20	±25	8/12	DFN5X6-12L	3N+3P
AGM214M6	±20	±15	20/25	DFN5X6-12L	3N+3P
AGM3020M6	±30	±20	12/24	DFN5X6-12L	3N+3P
AGM308M6	±30	±25	8/18	DFN5X6-12L	3N+3P
AGM318M6	±30	±16	18/35	DFN5X6-12L	3N+3P
AGM630M6	±60	18/-15	28/50	DFN5X6-12L	3N+3P
AGM420M6	±40	±18	16/28	DFN5X6-12L	3N+3P
AGM425M6	±40	±15	20/40	DFN5X6-12L	3N+3P
AGM18N10M3	±100	±20	16	DFN5X6-6L	3N
AGM14N10M3	±100	±22	16	DFN5X6-6L	3N

20V 单N管

Part NO	Vdss(v)	Id(A)	RdsON(mΩ)	Package	Channel
AGM204AP	20	55	3.1	PDFN3.3*3.3	N
AGM204A	20	100	3.1	PDFN5*6	N
AGM204D	20	110	2.6	TO-252	N
AGM206AP	20	60	5	PDFN3.3*3.3	N
AGM206A	20	85	4.5	PDFN5*6	N
AGM208AP	20	50	6	PDFN3.3*3.3	N

20V 单N管

Part NO	Vdss(v)	Id(A)	RdsON(mΩ)	Package	Channel
AGM208A	20	50	6	PDFN5*6	N
AGM208D	20	50	6.2	TO-252	N
AGM210AP	20	25	8.5	PDFN3.3*3.3	N
AGM2300E	20	2.8	31	SOT23-3	N
AGM3416E	20	6.5	10	SOT23-3	N

20V 单P管

Part NO	Vdss(v)	Id(A)	RdsON(mΩ)	Package	Channel
AGM20P30AP	-20	-48	5.5	PDFN3.3*3.3	P
AGM20P30AP1	-20	-30	7	PDFN3.3*3.3	P
AGM20P22AS	-20	-8	16	DFN2*2	P
AGM20P07E	-20	-6.5	16	SOT23	P
AGM20P22E	-20	-6.2	18	SOT23-3	P
AGM3415E	-20	-5	28	SOT23-3	P

30V 单N管

Part NO	Vdss(v)	Id(A)	RdsON(mΩ)	Package	Channel
AGM3015D	30	160	1.5	TO-252	N
AGM302A1	30	180	1.8	PDFN5*6	N
AGM303A	30	110	2.7	PDFN5*6	N
AGM303D	30	110	2.8	TO-252	N
AGM303AP	30	90	2.8	PDFN3.3*3.3	N
AGM304A	30	100	2.8	PDFN5*6	N
AGM304D	30	100	2.8	TO-252	N
AGM304AP	30	40	3.8	PDFN3.3×3.3	N
AGM305A	30	80	3.8	PDFN5*6	N
AGM305D	30	80	3.8	TO-252	N
AGM305AP	30	68	4.5	PDFN3.3*3.3	N
AGM306A	30	60	6.2	PDFN5*6	N
AGM306D	30	60	5.7	TO-252	N
AGM306AP	30	46	5.7	PDFN3.3*3.3	N
AGM308AP	30	40	6.2	PDFN3.3*3.3	N

30V 单N管

Part NO	Vdss(v)	Id(A)	RdsON(mΩ)	Package	Channel
AGM310D	30	28	8	TO-252	N
AGM310AP1	30	28	6.7	PDFN3.3*3.3	N
AGM3009A	30	229	0.8	PDFN5*6	N
AGM3012A-CP	30	200	1.1	PDFN5*6	N
AGM3012AP-CP	30	139	1.1	PDFN3.3*3.3	N
AGM3015A	30	136	1.6	PDFN5*6	N
AGM3015AP-CP	30	190	1.25	PDFN3.3X3.3	N
AGM3018AP-CP	30	170	1.8	PDFN3.3*3.3	N
AGM3005LS	30	400	0.5	sTOLL	N

30V 单P管

Part NO	Vdss(v)	Id(A)	RdsON(mΩ)	Package	Channel
AGM30P20AS	-30	-20	13	DFN2*2	P
AGM30P25D	-30	-12	21	TO-252	P
AGM30P25AP	-30	-10	20	PDFN3.3*3.3	P
AGM30P25S	-30	-8	20	SOP8	P
AGM30P35D	-30	-20	36.5	TO-252	P
AGM30P35AP	-30	-16	34.5	PDFN3.3*3.3	P
AGM30P35S	-30	-6	34.5	SOP8	P
AGM30P150A	-30	-150	2	PDFN5*6	P
AGM30P130D	-30	-160	2.8	TO-252	P
AGM30P110A	-30	-138	2.8	PDFN5*6	P
AGM30P110D	-30	-138	3.5	TO-252	P
AGM30P100A	-30	-118	3.7	PDFN5*6	P
AGM30P100D	-30	-128	3.7	TO-252	P
AGM30P05A	-30	-75	5.5	PDFN5*6	P
AGM30P05D	-30	-75	5.5	TO-252	P
AGM30P05AP	-30	-60	5.5	PDFN3.3*3.3	P
AGM30P55A	-30	-65	6	PDFN5*6	P
AGM30P55D	-30	-65	5	TO-252	P
AGM30P08A	-30	-60	7	PDFN5*6	P
AGM30P08AP	-30	-60	7.2	PDFN3.3*3.3	P
AGM30P10SR	-30	-15	9.3	SOP8	P

30V 单P管

Part NO	Vdss(v)	Id(A)	RdsON(mΩ)	Package	Channel
AGM30P10A	−30	−40	11	PDFN5*6	P
AGM30P10AP	−30	−50	9.6	PDFN3.3*3.3	P
AGM30P10S	−30	−14	12	SOP8	P
AGM30P16A	−30	−21	15	PDFN5*6	P
AGM30P16AP	−30	−21	11	PDFN3.3*3.3	P
AGM30P16S	−30	−10	15	SOP8	P
AGM30P18E	−30	−9	19	SOT23−3	P
AGM30P20D	−30	−18	15.5	TO−252	P
AGM30P20AP	−30	−18	15.5	PDFN3.3×3.3	P

40V 单N管

Part NO	Vdss(v)	Id(A)	RdsON(mΩ)	Package	Channel
AGM4005LL	40	350	0.82	TOLL	N
AGM4008LL	40	500	0.63	TOLL	N
AGM4008BH	40	500	0.63	TO−263−7	N
AGM4012A	40	160	1.1	PDFN5*6	N
AGM4015AP−CP	40	130	1.6	PDFN3.3*3.3	N
AGM4025A	40	125	2	PDFN5*6	N
AGM4025D	40	125	2.2	TO−252	N
AGM4025AP	40	125	2.3	PDFN3.3*3.3	N
AGM402A1	40	140	2.3	PDFN5×6	N
AGM403A1	40	120	2.3	PDFN5×6	N
AGM403D1	40	120	2.7	TO−252	N
AGM403AP	40	65	2.7	PDFN3.3*3.3	N
AGM404A	40	82	3.8	PDFN5*6	N
AGM404D	40	82	4	TO−252	N
AGM404AP	40	82	3.9	PDFN3.3*3.3	N
AGM405A	40	72	5.1	PDFN5*6	N
AGM405D	40	72	5.1	TO−252	N
AGM405AP	40	62	5.1	PDFN3.3*3.3	N
AGM409A	40	63	6.5	PDFN5*6	N
AGM409D	40	63	6.5	TO−252	N
AGM412A	40	40	10.5	PDFN5*6	N

40V 单N管

Part NO	Vdss(v)	Id(A)	RdsON(mΩ)	Package	Channel
AGM412D	40	40	11	TO−252	N
AGM412AP	40	40	10.5	PDFN3.3*3.3	N
AGM418D	40	30	17	TO−252	N
AGM435E	40	5	20	SOT23−3	N

40V 单P管

Part NO	Vdss(v)	Id(A)	RdsON(mΩ)	Package	Channel
AGM40P13S	−40	−8	13	SOP8	P
AGM40P35A	−40	−60	11	PDFN5*6	P
AGM40P35D	−40	−60	11	TO−252	P
AGM40P35AP	−40	−60	11	PDFN3.3*3.3	P
AGM40P30A	−40	−38	23	PDFN5*6	P
AGM40P30D	−40	−30	25	TO−252	P
AGM40P30AP	−40	−33	26	PDFN3.3*3.3	P
AGM40P25A	−40	−19	32	PDFN5*6	P
AGM40P25D	−40	−24	31	TO−252	P
AGM40P25AP	−40	−19	32	PDFN3.3*3.3	P
AGM40P20S	−40	−8	28	SOP8	P
AGM40P26D	−40	−7.2	40.5	TO−252	P
AGM40P26E	−40	−5.8	36	SOT23−3	P
AGM40P65AP	−40	−12	56	PDFN3.3*3.3	P
AGM40P65E	−40	−5	63	SOT23−3	P
AGM40P150A	−40	−135	3	PDFN5*6	P
AGM40P120AF	−40	−265	2.5	LFPAK5*6	P
AGM40P110A	−40	−105	4.1	PDFN5*6	P
AGM40P100C	−40	−140	4.6	TO−220	P
AGM40P100A	−40	−130	4.6	PDFN5*6	P
AGM40P100D	−40	−130	4.6	TO−252	P
AGM40P75A	−40	−70	7	PDFN5*6	P
AGM40P75D	−40	−70	7	TO−252	P
AGM40P55A	−40	−50	8.9	PDFN5*6	P
AGM40P55D	−40	−50	8.9	TO−252	P
AGM40P55AP	−40	−50	8.9	PDFN3.3*3.3	P

60V 单N管 Vth(GS) 高开启产品

Part NO	Vdss(v)	Id(A)	RdsON(mΩ)	Package	Channel
AGMH601A-CP	60	277	0.9	PDFN5*6	N
AGMH602H	60	180	2.3	TO-263	N
AGMH603H	60	180	2.5	TO-263	N
AGMH6035A	60	125	3.4	PDFN5*6	N
AGMH6035D	60	125	3.6	TO-252	N
AGMH605D	60	105	4.7	TO-252	N
AGMH606D	60	80	5.4	TO-252	N
AGMH608D	60	80	6.5	TO-252	N
AGM6080D	60	82	7.5	TO-252	N
AGM6070A	60	72	7	PDFN5*6	N
AGMH612D	60	58	10.5	TO-252	N
AGMH614D	60	50	11	TO-252	N
AGM6805C	68	5.2	98	TO-220	N
AGM6805H	68	5.3	98	TO-263	N
AGM6805D	68	5.8	98	TO-252	N

60V 单N管 Vth(GS) 低开启产品

Part NO	Vdss(v)	Id(A)	RdsON(mΩ)	Package	Channel
AGM614D	60	53	10	TO-252	N
AGM628D	60	30	26	TO-252	N
AGM628DM1	60	20	31	TO-252	N
AGM628AP	60	23	26	PDFN3.3*3.3	N
AGM628S	60	8	28	SOP8	N
AGM635E	60	5	30	SOT23-3	N
AGM665D	60	15	60	TO-252	N
AGM665E	60	3	60	SOT23-3	N
AGM3422E	60	3	78	SOT23-3	N
AGM601LL	60	223	1.25	TOLL	N
AGM601AD	60	223	1.3	PTO-252	N
AGM601A-CP	60	200	1.1	PDFN5*6	N
AGM6015H	60	210	1.5	TO-263	N
AGM6018A	60	150	1.6	PDFN5*6	N
AGM602LL	60	260	2	TOLL	N
AGM612AP	60	50	11	PDFN3.3*3.3	N

60V 单N管 Vth(GS) 低开启产品

Part NO	Vdss(v)	Id(A)	RdsON(mΩ)	Package	Channel
AGM603H	60	130	3	TO-263	N
AGM6035A	60	100	2.4	PDFN5*6	N
AGM6014A	60	80	4.6	PDFN5*6	N
AGM6014AP	60	72	4.3	PDFN3.3*3.3	N
AGM605A	60	80	4.7	PDFN5*6	N
AGM605D	60	72	4.5	TO-252	N
AGM609A	60	60	6.5	PDFN5*6	N
AGM609D	60	60	7.5	TO-252	N
AGM609AP	60	40	7.5	PDFN3.3*3.3	N
AGM612D	60	50	11	TO-252	N

60V 单P管

Part NO	Vdss(v)	Id(A)	RdsON(mΩ)	Package	Channel
AGM60P95A	-60	-100	7.5	PDFN5*6	P
AGM60P90A	-60	-90	9.6	PDFN5*6	P
AGM60P90D	-60	-90	8.2	TO-252	P
AGM60P80A	-60	-80	12	PDFN5*6	P
AGM60P80D	-60	-80	12	TO-252	P
AGM60P14A	-60	-52	18	PDFN5*6	P
AGM60P14D	-60	-52	18	TO-252	P
AGM60P14AP	-60	-52	18	PDFN3.3*3.3	P
AGM60P35F	-60	-52	17	TO-220F	P
AGM60P35C	-60	-52	18	TO-220	P
AGM60P40A	-60	-45	23	PDFN5*6	P
AGM60P40D	-60	-45	23	TO-252	P
AGM60P30A	-60	-30	50	PDFN5*6	P
AGM60P30D	-60	-30	40	TO-252	P
AGM60P30AP	-60	-30	40	PDFN3.3*3.3	P
AGM60P20D	-60	-18	57	TO-252	P
AGM60P20AP	-60	-10	57	PDFN3.3*3.3	P
AGM60P20R	-60	-10	65	SOT223-3L	P
AGM60P06S	-60	-5.7	48	SOP8	P
AGM3P06E	-60	-2.5	90	SOT23-3	P
AGM2309EL	-60	-2	160	SOT23	P

60V 单P管

Part NO	Vdss(v)	Id(A)	RdsON(mΩ)	Package	Channel
AGM60P130H	-60	-130	5.5	TO-263	P
AGM60P130C	-60	-130	5.5	TO-220	P
AGM60P130A	-60	-130	5.5	PDFN5*6	P
AGM60P100A	-60	-140	5.5	PDFN5*6	P
AGM60P85AP	-60	-14	80	PDFN3.3*3.3	P
AGM60P85E	-60	-3	80	SOT23-3	P

100V 单N管 Vth(GS) 高开启产品

Part NO	Vdss(v)	Id(A)	RdsON(mΩ)	Package	Channel
AGMH065N10C	100	100	6.5	TO-220	N
AGMH065N10D	100	100	6.5	TO-252	N
AGMH065N10H	100	100	6.5	TO-263	N
AGMH065N10F	100	100	6.5	TO-220F	N
AGMH056N10A	100	92	6.2	PDFN5*6	N
AGMH035N10H	100	160	3.5	TO-263	N
AGMH035N10C	100	150	3.6	TO-220	N
AGMH035N10A	100	112	3.6	PDFN5*6	N
AGMH035N10LL	100	170	3	TOLL	N
AGMH022N10C	100	220	2.2	TO-220	N
AGMH022N10H	100	220	2.2	TO-263	N
AGMH022N10LL	100	295	1.8	TOLL	N
AGMH018N10C	100	253	1.95	TO-220	N
AGMH018N10T	100	308	1.8	TO-247	N

100V 单N管 Vth(GS) 低开启产品

Part NO	Vdss(v)	Id(A)	RdsON(mΩ)	Package	Channel
AGM038N10A	100	120	3.8	PDFN5*6	N
AGM035N10D	100	112	4.5	TO-252	N
AGM035N10A	100	112	3	PDFN5*6	N
AGM042N10A	100	110	4.2	PDFN5*6	N
AGM042N10D	100	110	4.1	TO-252	N
AGM042N10C	100	110	4.1	TO-220	N

100V 单N管 Vth(GS) 低开启产品

Part NO	Vdss(v)	Id(A)	RdsON(mΩ)	Package	Channel
AGM035N10C	100	160	3.5	TO-220	N
AGM025N10C	100	180	2.7	TO-220	N
AGM18N10D	100	40	16	TO-252	N
AGM18N10AP	100	35	17	PDFN3.3*3.3	N
AGM12N10AP	100	55	9.3	PDFN3.3×3.3	N
AGM15N10AP	100	12	85	PDFN3.3×3.3	N
AGM15N10D	100	15	85	TO-252	N
AGM15N10D-G	100	16	68	TO-252	N
AGM1099D	100	8	94	TO-252	N
AGM065N10D	100	95	5.8	TO-252	N
AGM065N10C	100	100	6.2	TO-220	N

100V 单P管

Part NO	Vdss(v)	Id(A)	RdsON(mΩ)	Package	Channel
AGM01P15AP	-100	-7.9	315	PDFN3.3×3.3	P
AGM01P15D	-100	-7.9	315	TO-252	P
AGM01P15E	-100	-4.3	270	SOT23-3	P
AGM55P10A	-100	-30	64	PDFN5*6	P
AGM55P10C	-100	-38	52	TO-220	P
AGM55P10D	-100	-30	52	TO-252	P
AGM55P10F	-100	-30	52	TO-220F	P
AGM55P10S	-100	-12	65	SOP8	P
AGM72P10D	-100	-25	67	TO-252	P
AGM85P10A	-100	-19	86	PDFN5*6	P
AGM85P10AP	-100	-19	86	PDFN3.3*3.3	P
AGM85P10D	-100	-19	86	TO-252	P
AGM100P35A	-100	-50	37	PDFN5*6	P
AGM100P35D	-100	-40	30	TO-252	P
AGM150P10AP	-100	-16	112	PDFN3.3*3.3	P
AGM150P10D	-100	-18	112	TO-252	P
AGM150P10S	-100	-12	112	SOP8	P
AGM500P10AP	-100	-8.1	455	PDFN3.3*3.3	P
AGM500P10EL	-100	-1.5	440	SOT23	P