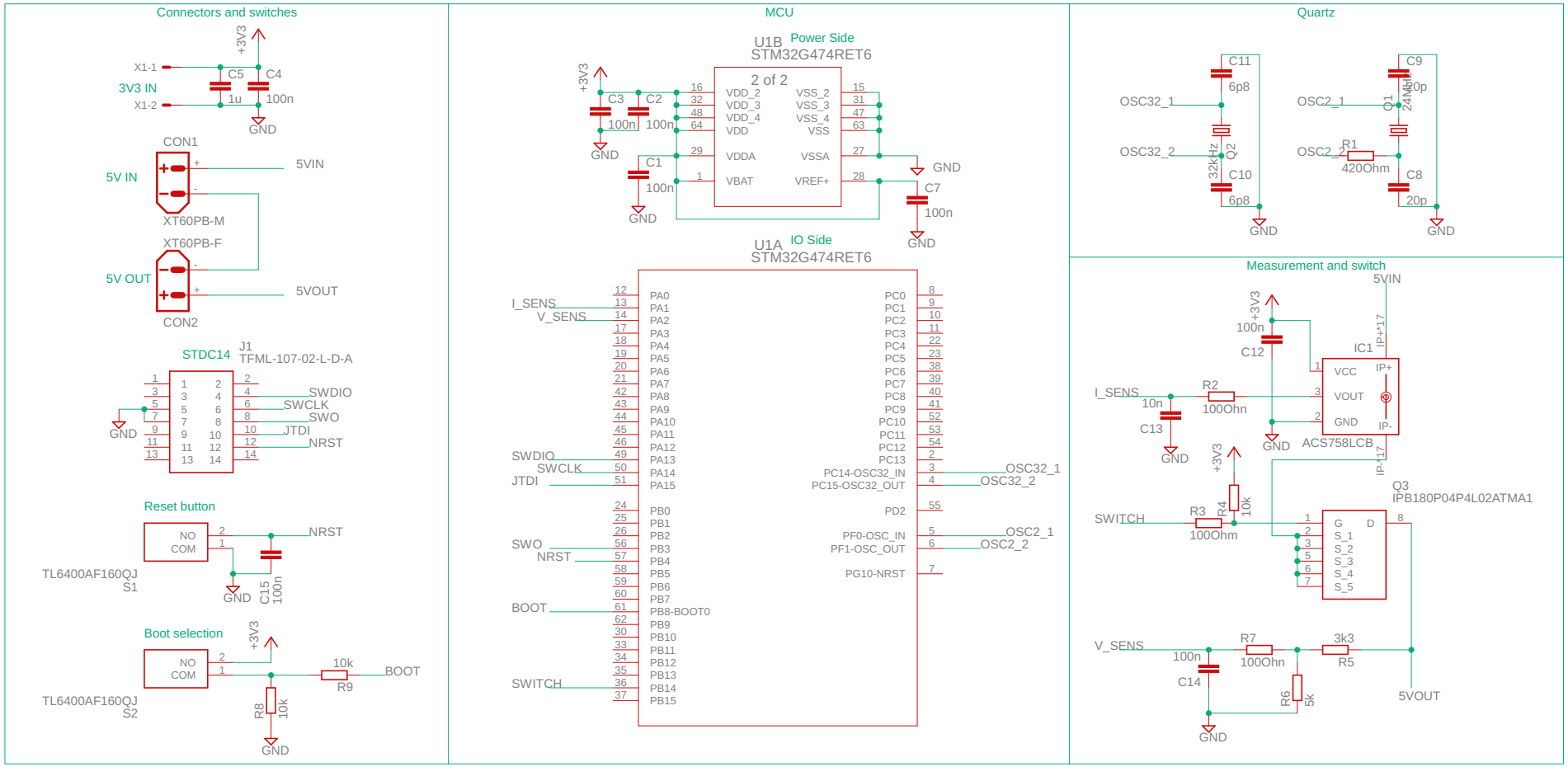
Connectors and switches
+3V3
X1-1
3V3 IN
X1-2
C5
1u
C4
100n
GND
CON1
5V IN
5VIN
XT60PB-M
XT60PB-F
5V OUT
5VOUT
CON2
STDC14
J1
TFML-107-02-L-D-A
SWDIO
SWCLK
SWO
JTDI
NRST
GND
Reset button
NO
COM
NRST
TL6400AF160QJ
S1
C15
100n
Boot selection
+3V3
10k
R9
BOOT
TL6400AF160QJ
S2
R8
10k
MCU
U1B
Power Side
STM32G474RET6
2 of 2
VDD_2
VDD_3
VDD_4
VDD
VDDA
VBAT
VSS_2
VSS_3
VSS_4
VSS
VSSA
VREF+
C3
C2
100n
C1
C7
U1A
IO Side
STM32G474RET6
I_SENS
V_SENS
SWDIO
SWCLK
JTDI
SWO
NRST
BOOT
SWITCH
PA0
PA1
PA2
PA3
PA4
PA5
PA6
PA7
PA8
PA9
PA10
PA11
PA12
PA13
PA14
PA15
PB0
PB1
PB2
PB3
PB4
PB5
PB6
PB7
PB8-BOOT0
PB9
PB10
PB11
PB12
PB13
PB14
PB15
PC0
PC1
PC2
PC3
PC4
PC5
PC6
PC7
PC8
PC9
PC10
PC11
PC12
PC13
PC14-OSC32_IN
PC15-OSC32_OUT
PD2
PF0-OSC_IN
PF1-OSC_OUT
PG10-NRST
OSC32_1
OSC32_2
OSC2_1
OSC2_2
Quartz
C11
6p8
OSC32_1
OSC32_2
32kHz
Q2
C10
6p8
C9
20p
OSC2_1
Q1
24MHz
OSC2_2
R1
420Ohm
C8
20p
Measurement and switch
5VIN
+3V3
100n
C12
IC1
VCC
VOUT
GND
IP+
IP-
IP+*17
IP-*17
ACS758LCB
I_SENS
10n
C13
R2
100Ohn
+3V3
R4
10k
SWITCH
R3
100Ohm
Q3
IPB180P04P4L02ATMA1
G
D
S_1
S_2
S_3
S_4
S_5
V_SENS
100n
C14
R7
100Ohn
3k3
R5
R6
5k
5VOUT