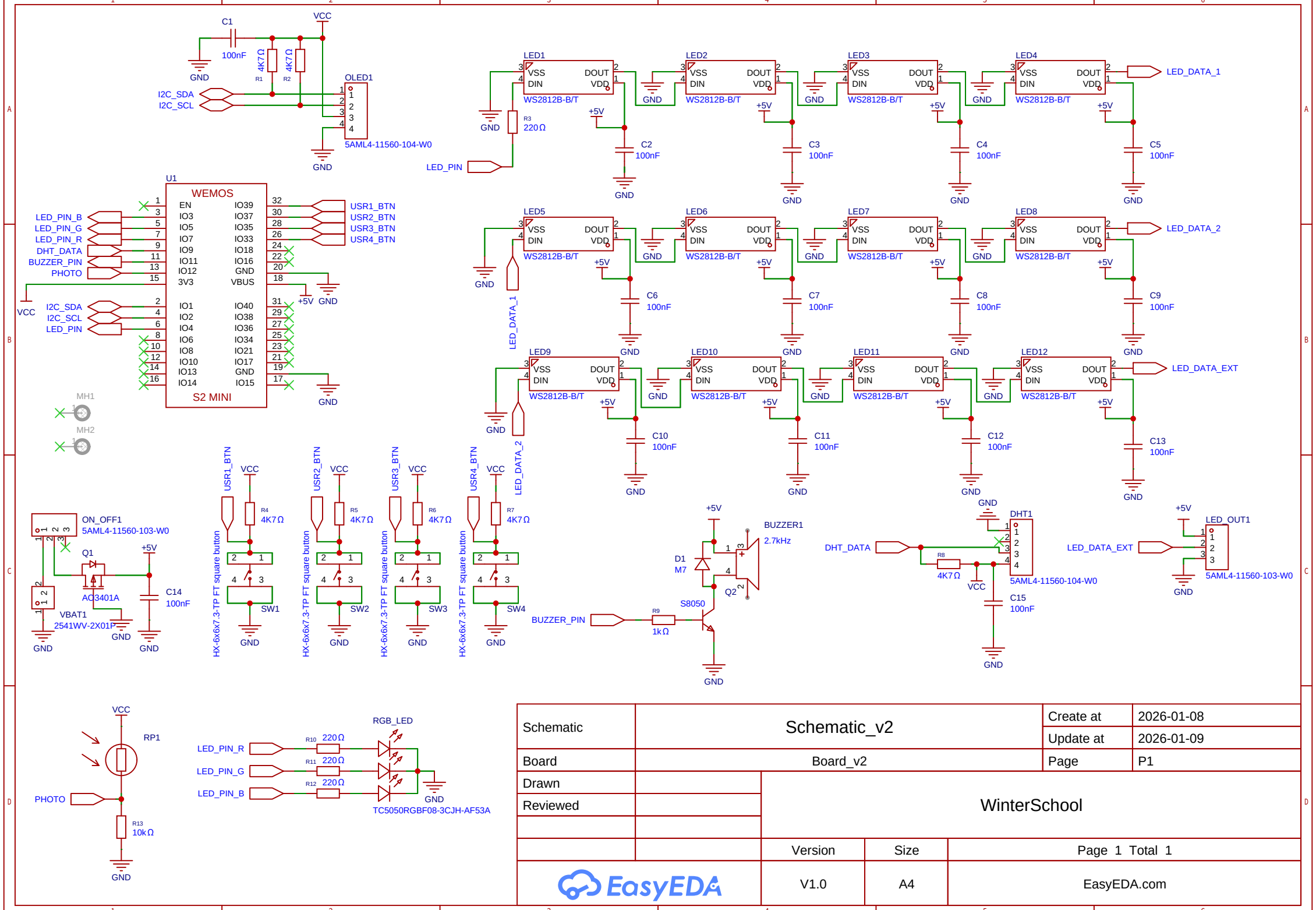

Schematic	Schematic_v2	Create at	2026-01-08
		Update at	2026-01-09
Board	Board_v2	Page	P1
Drawn		WinterSchool	
Reviewed			
		Version	Size	Page 1 Total 1
EasyEDA		V1.0	A4	EasyEDA.com