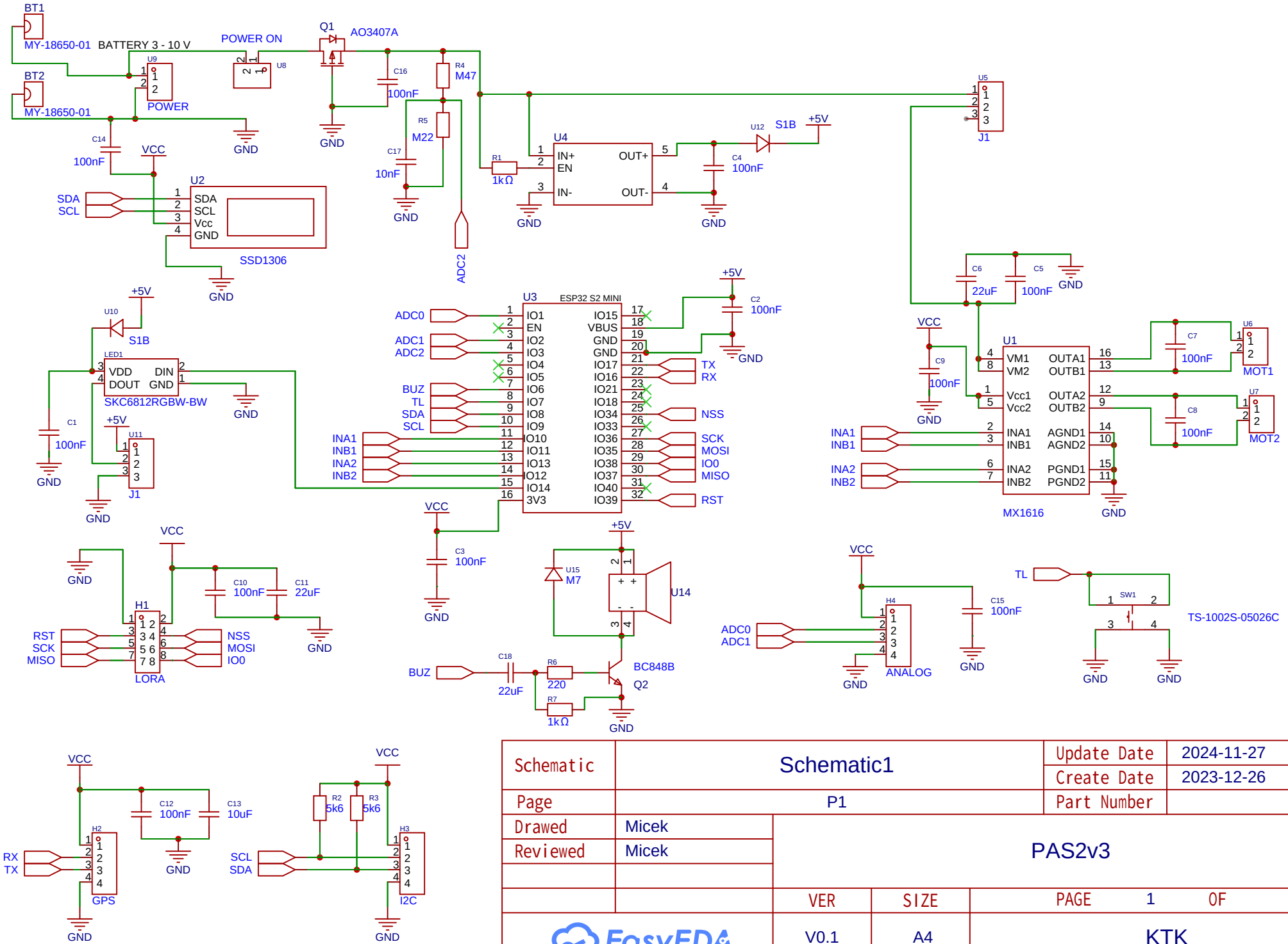

Schematic	Schematic1	Update Date	2024-11-27
		Create Date	2023-12-26
Page	P1	Part Number	
Drawed	Micek	PAS2v3	
Reviewed	Micek		
		VER	SIZE	PAGE 1 OF 1
EasyEDA		V0.1	A4	KTK