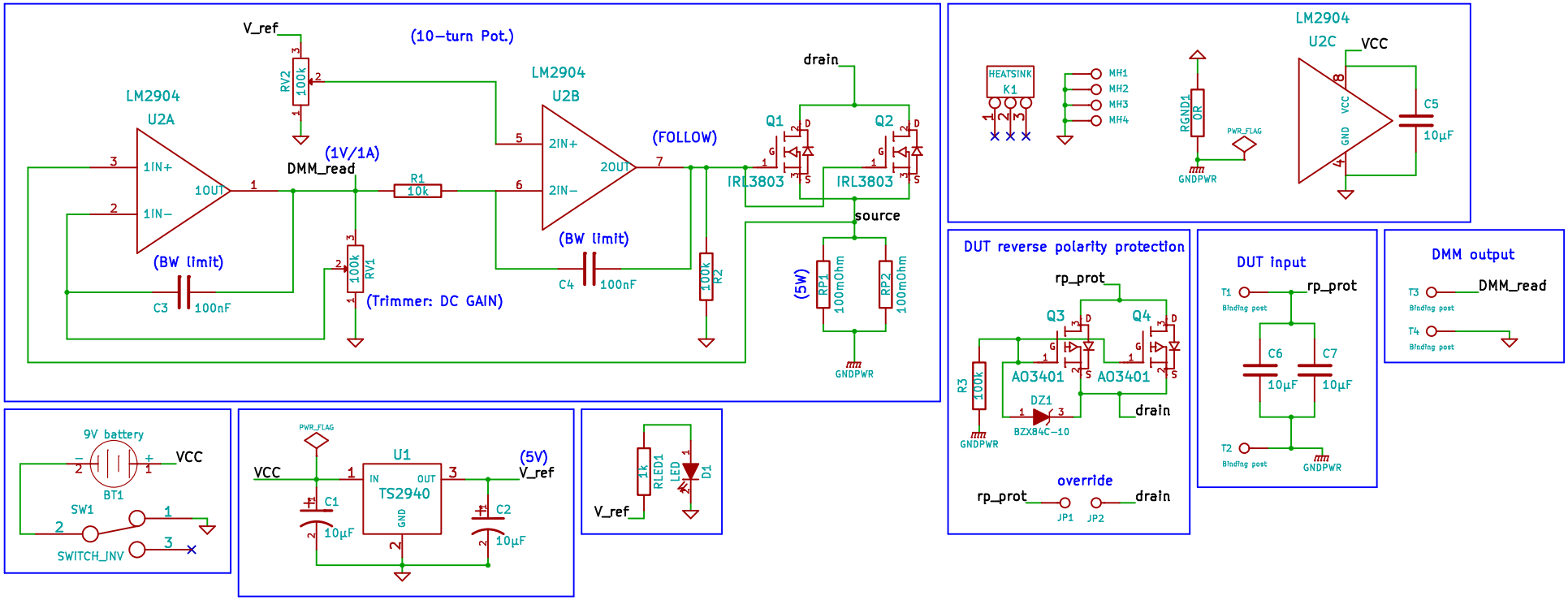


| | | |
|---|---|---|
| 2012 – My 2muF – blog.spitzenpfeil.org | | |
| File: YauDL.sch | | |
| Sheet: / | | |
| Title: (Yet) (a)nother (u)seless (D)ummy (Load) – YauDL | | |
| Size: A4 | Date: 13 jun 2012 | Rev: 0.2 |
| KiCad E.D.A. eeschema (2012-jan-04)-stable | | Id: 1/1 |