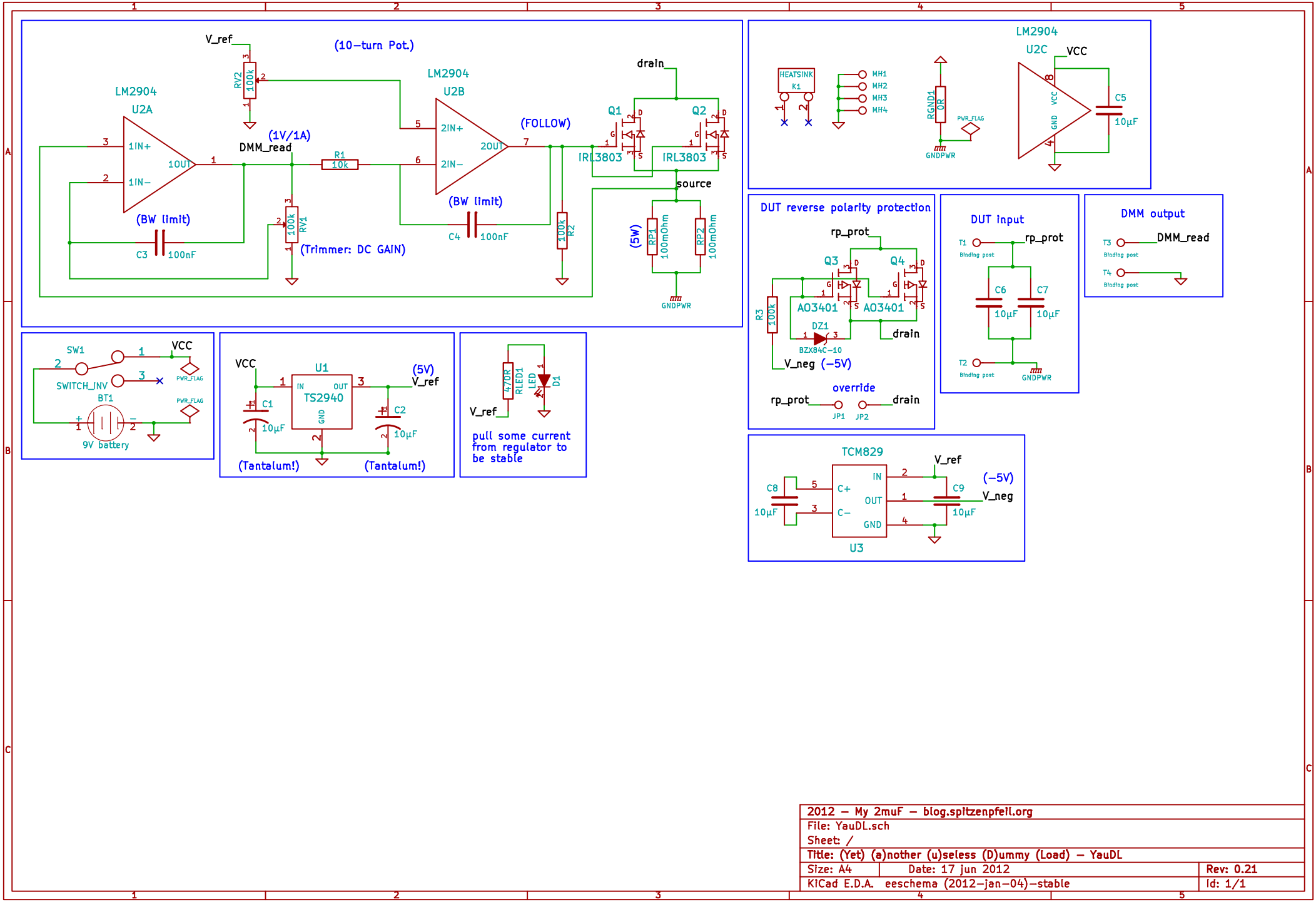

2012 – My 2muF – blog.spitzenpfeil.org		
File: YauDL.sch		
Sheet: /		
Title: (Yet) (a)nother (u)seless (D)ummy (Load) – YauDL		
Size: A4	Date: 17 jun 2012	Rev: 0.21
KiCad E.D.A. eeschema (2012-jan-04)-stable		Id: 1/1