Channel A

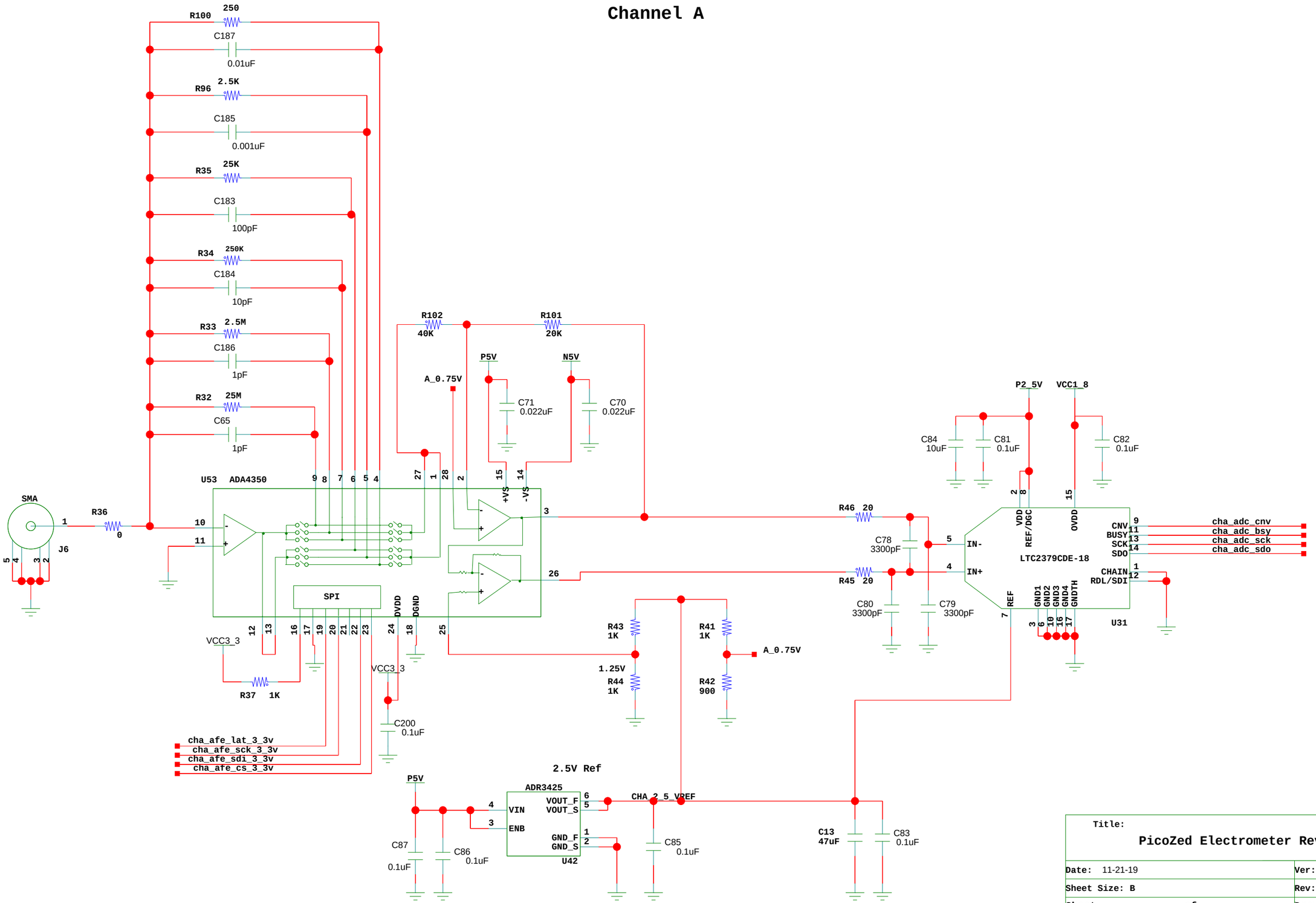

Title: PicoZed Electrometer RevB	
Date: 11-21-19	Ver:
Sheet Size: B	Rev:
Sheet 1 of 19	Drawn By J. Mead

Channel B

R123 250
C133 0.01uF
R122 2.5K
C131 0.001uF
R66 25K
C129 100pF
R65 250K
C130 10pF
R64 2.5M
C132 1pF
R63 25M
C116 1pF

R125 40K
R124 20K
P5V
N5V
B_0.75V
C118 0.022uF
C117 0.022uF

P2_5V
VCC1_8
C125 10uF
C122 0.1uF
C123 0.1uF

SMA
J7
R67 0
U51 ADA4350
SPI
VCC3_3
R74 1K
C134 0.1uF
chb_afe_lat_3_3v
chb_afe_sck_3_3v
chb_afe_sdi_3_3v
chb_afe_cs_3_3v

R73 20
C119 3300pF
R72 20
C121 3300pF
C120 3300pF
LTC2379CDE-18
U11
chb_adc_cnv
chb_adc_bsy
chb_adc_sck
chb_adc_sdo

R70 1K
1.25V
R71 1K
R68 2K
R69 900
B_0.75V

2.5V Ref
ADR3425
U45
C128 0.1uF
C127 0.1uF
CHB_2_5_VREF
C126 0.1uF
C20 47uF
C124 0.1uF

Title: PicoZed Electrometer RevB	
Date: 11-21-19	Ver:
Sheet Size: B	Rev:
Sheet 2 of 19	Drawn By J. Mead

Channel C

R127 250
C152 0.01uF
R126 2.5K
C150 0.001uF
R78 25K
C148 100pF
R77 250K
C149 10pF
R76 2.5M
C151 1pF
R75 25M
C135 1pF

R129 40K
R128 20K
P5V
N5V
C_0.75V
C137 0.022uF
C136 0.022uF

P2_5V
VCC1_8
C144 10uF
C141 0.1uF
C142 0.1uF

SMA
J8
R79 0
U52 ADA4350
SPI
DVDD
DGND
+VS
-VS

R85 20
C138 3300pF
R84 20
C140 3300pF
C139 3300pF
IN-
IN+
REF
VDD
REF/DGC
OVDD
LTC2379CDE-18
GND1
GND2
GND3
GND4
GNDTH
U13
CNV
BUSY
SCK
SDO
CHAIN
RDL/SDI
chc_adc_cnv
chc_adc_bsy
chc_adc_sck
chc_adc_sdo

R82 1K
R83 1K
1.25V
R80 2K
R81 900
C_0.75V

VCC3_3
R86 1K
C153 0.1uF
chc_afe_lat_3_3v
chc_afe_sck_3_3v
chc_afe_sdi_3_3v
chc_afe_cs_3_3v

2.5V Ref
ADR3425
VIN
ENB
VOUT_F
VOUT_S
GND_F
GND_S
U46
CHC_2_5_VREF
C147 0.1uF
C146 0.1uF
C145 0.1uF
C21 47uF
C143 0.1uF

Title: PicoZed Electrometer RevB	
Date: 11-21-19	Ver:
Sheet Size: B	Rev:
Sheet 3 of 19	Drawn By J. Mead

Channel D

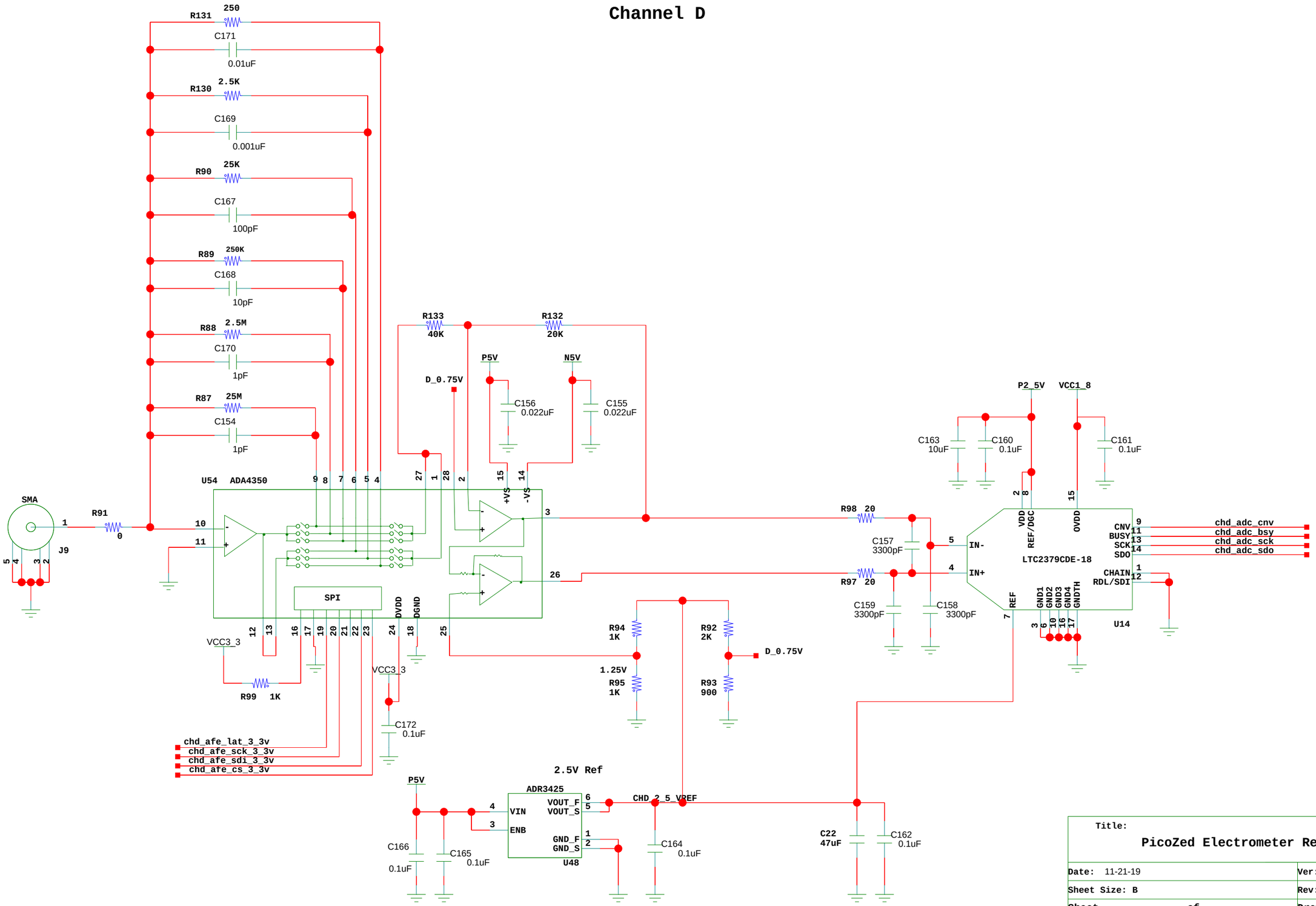

Title: PicoZed Electrometer RevB

Date: 11-21-19	Ver:
Sheet Size: B	Rev:
Sheet 4 of 19	Drawn By J. Mead

Expansion Connector

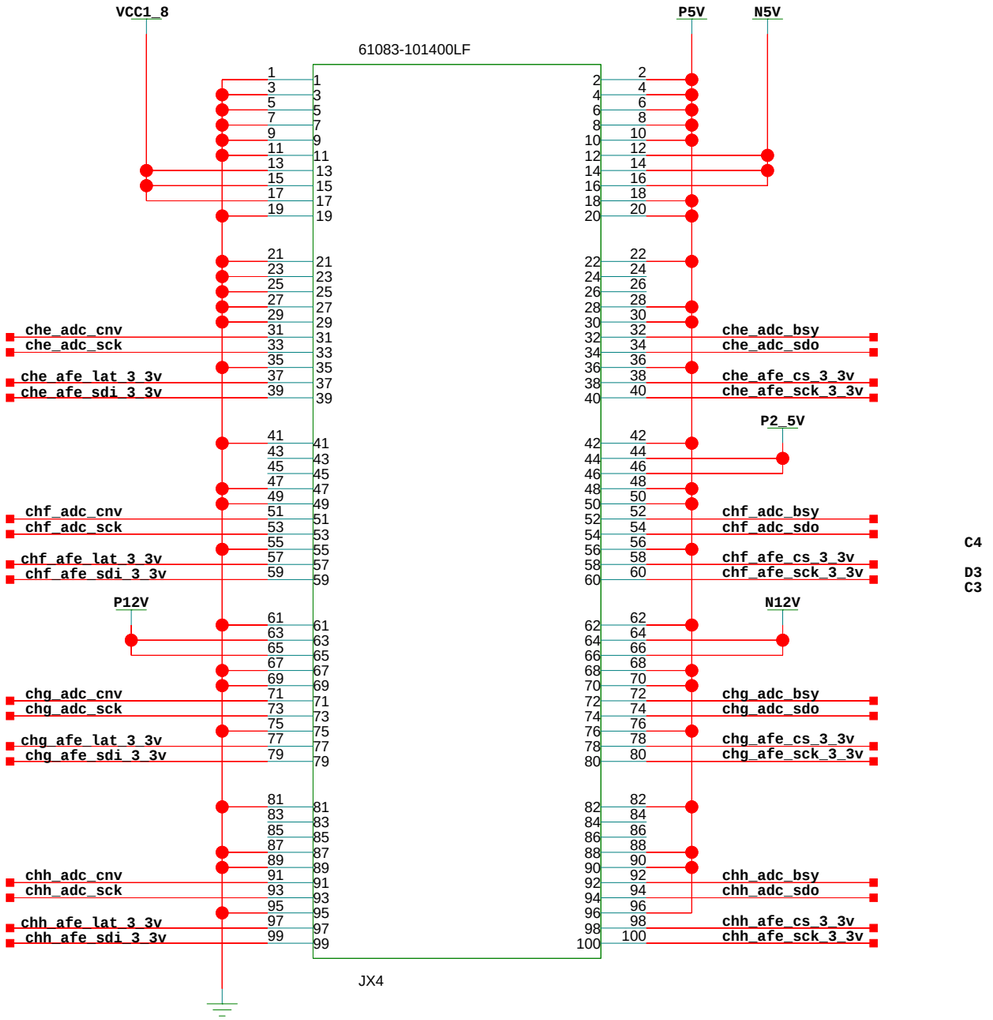

H4
H3
E7
C4
D3
C3

Title: PicoZed Electrometer RevB	
Date: 11-21-19	Ver:
Sheet Size: B	Rev:
Sheet 5 of 19	Drawn By J. Mead

3.3v to 1.8v level translator

Front End to picoZed

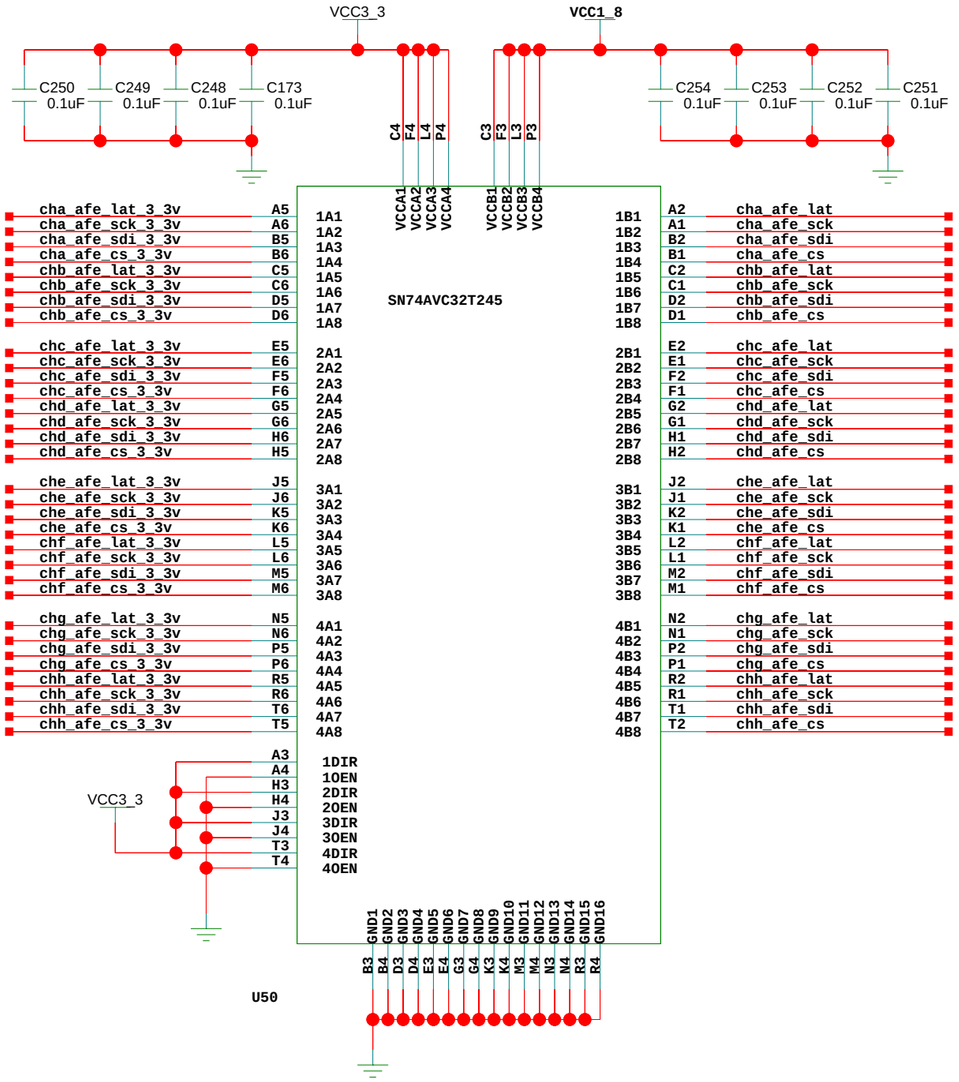

Front panel GPIO

3.3v to 5v level translator

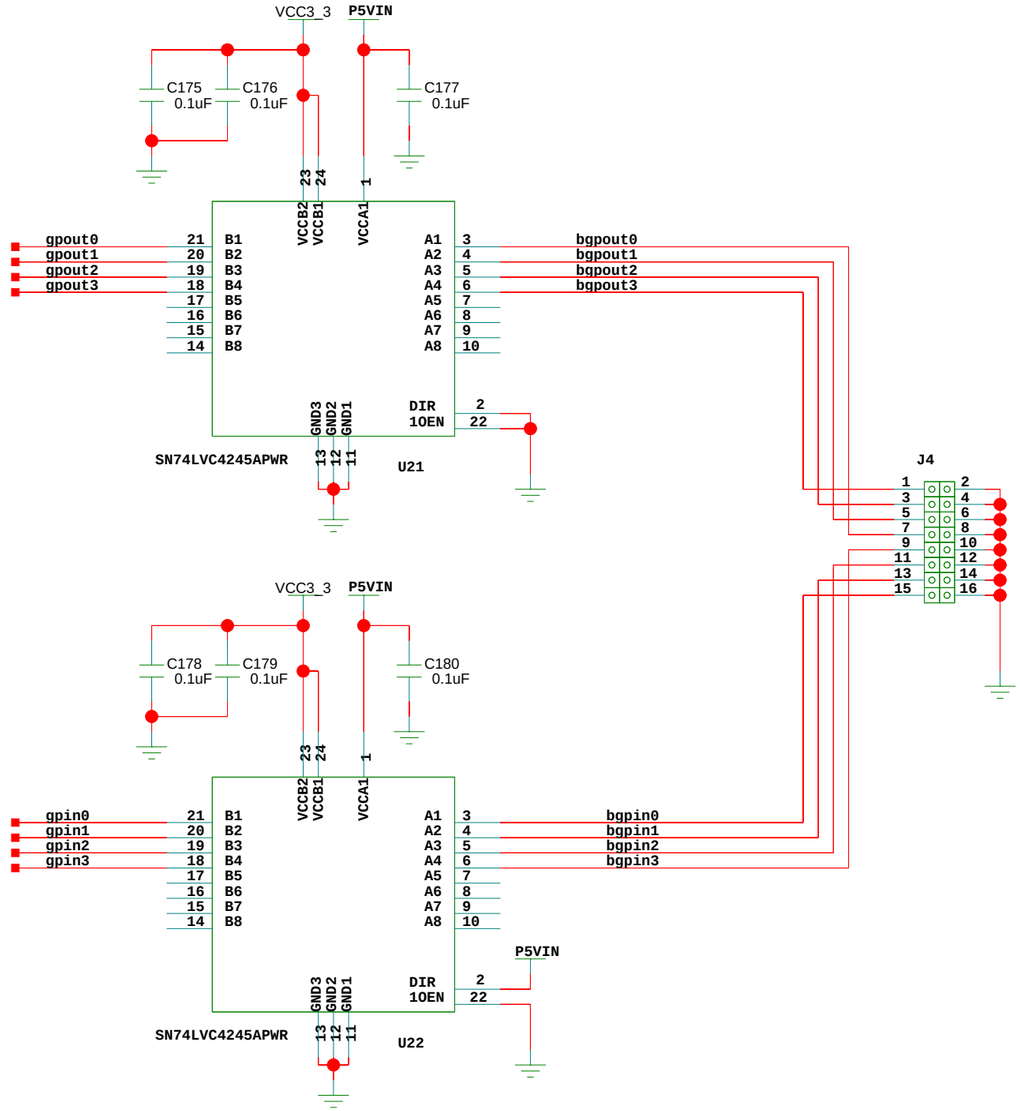

Title: PicoZed Electrometer RevB	
Date: 11-21-19	Ver:
Sheet Size: B	Rev:
Sheet 6 of 19	Drawn By J. Mead

Detector BIAS

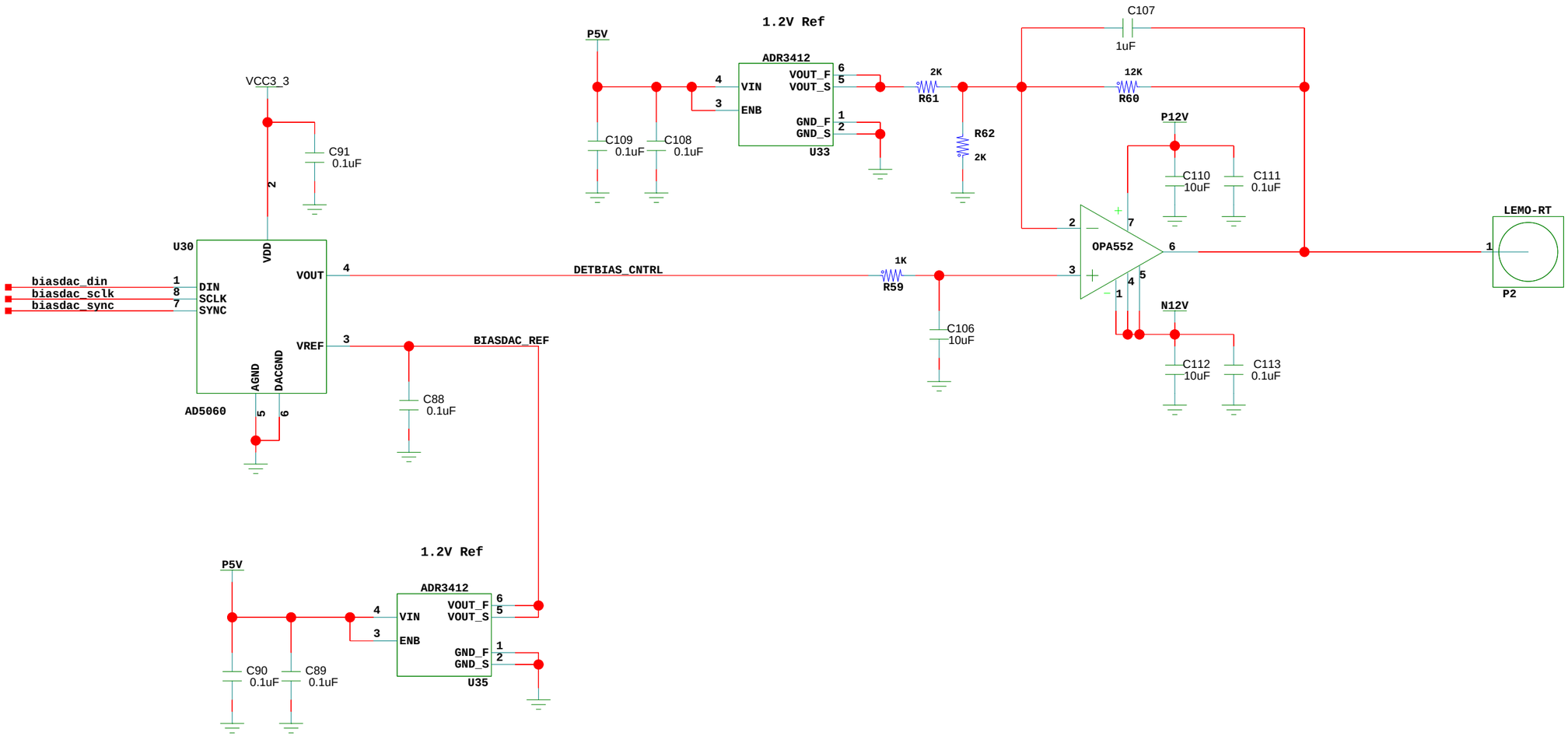

Title: PicoZed Electrometer RevB	
Date: 11-21-19	Ver:
Sheet Size: B	Rev:
Sheet 7 of 19	Drawn By J. Mead

Motion Feedback DAC Outputs

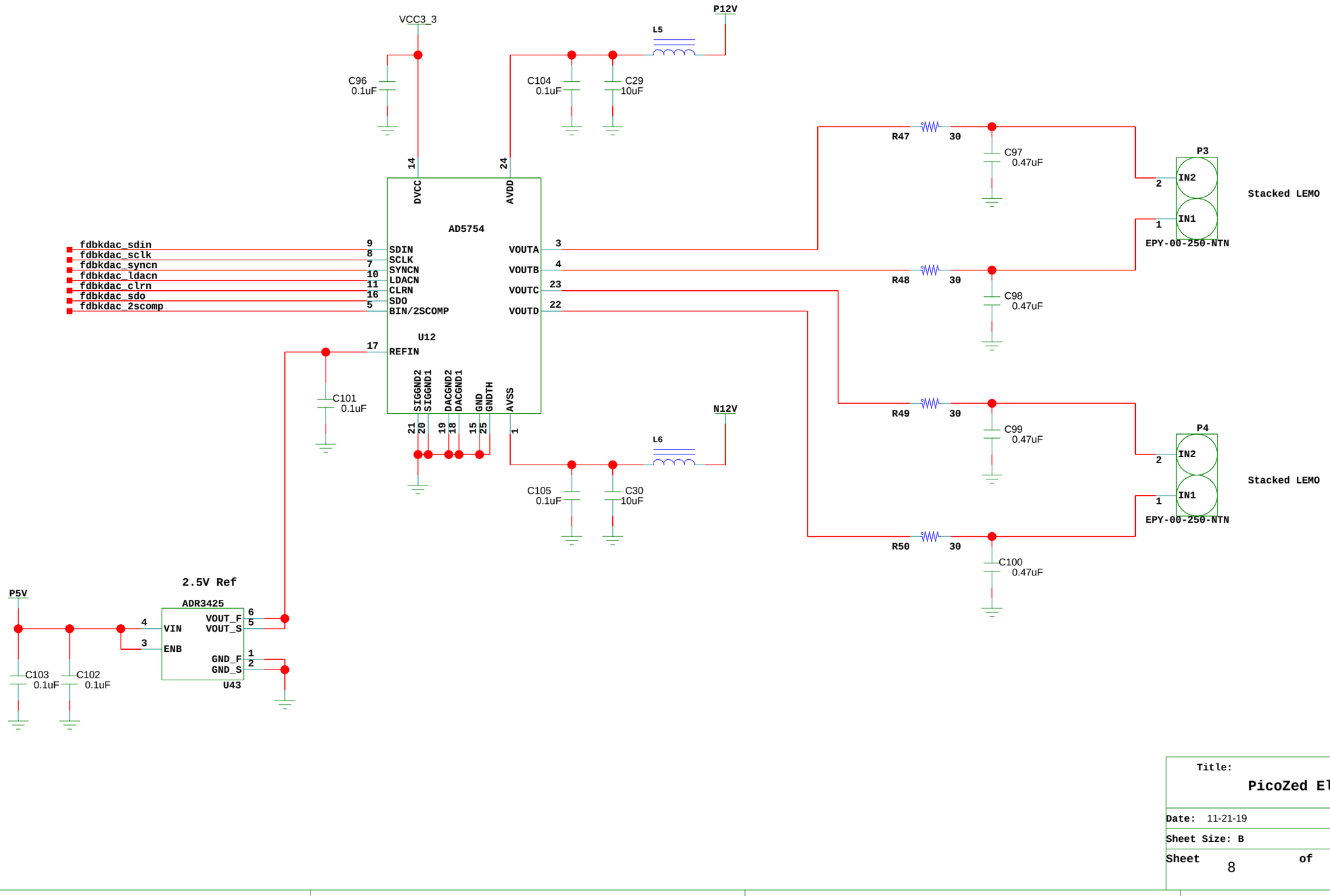

Title: PicoZed Electrometer RevB	
Date: 11-21-19	Ver:
Sheet Size: B	Rev:
Sheet 8 of 19	Drawn By J. Mead

Temperature Control: Thermistor Readback

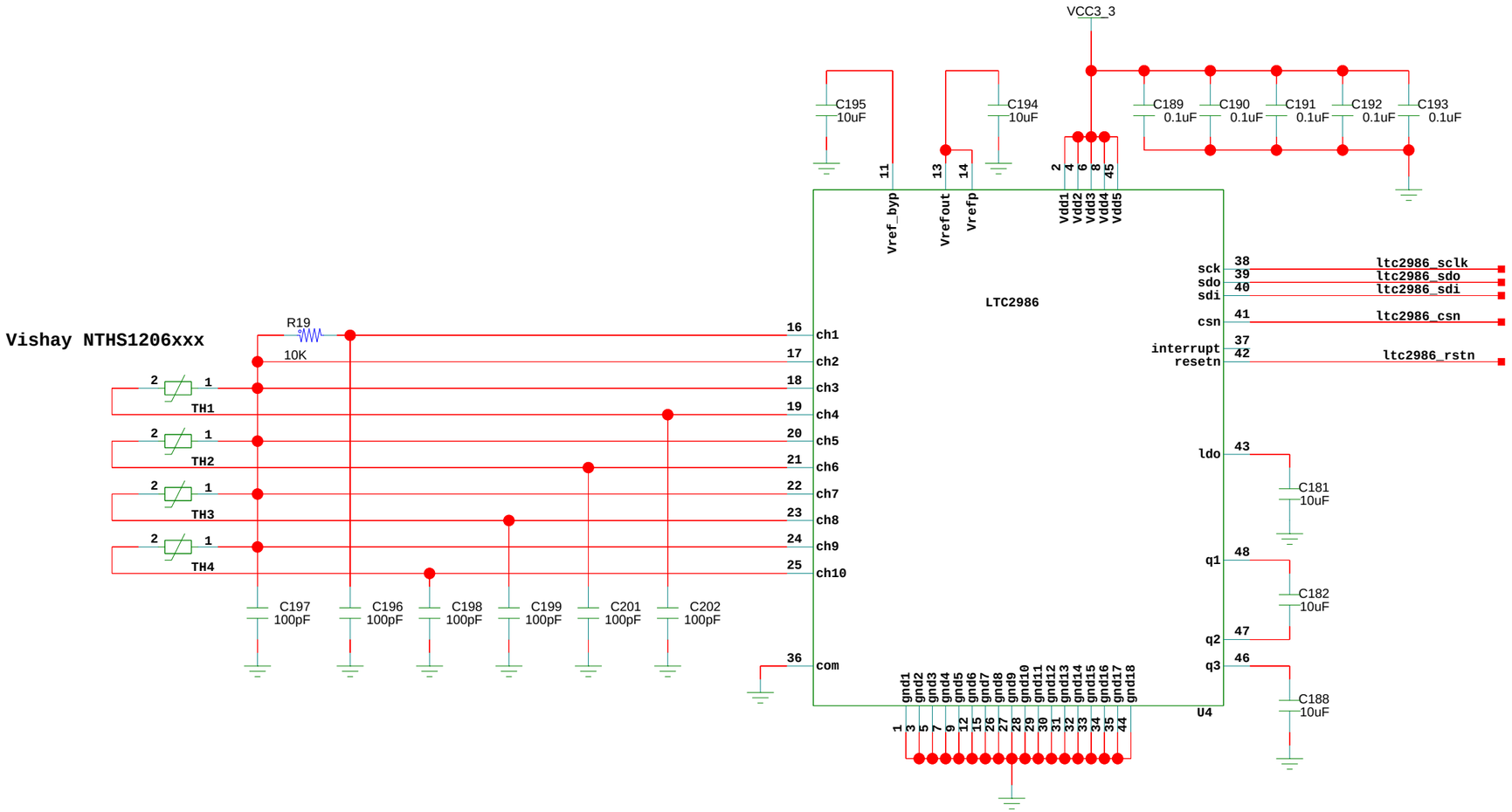

Title: PicoZed Electrometer RevB	
Date: 11-21-19	Ver:
Sheet Size: B	Rev:
Sheet 9 of 19	Drawn By J. Mead

Temperature Control : DAC Outputs with Resistor Heaters

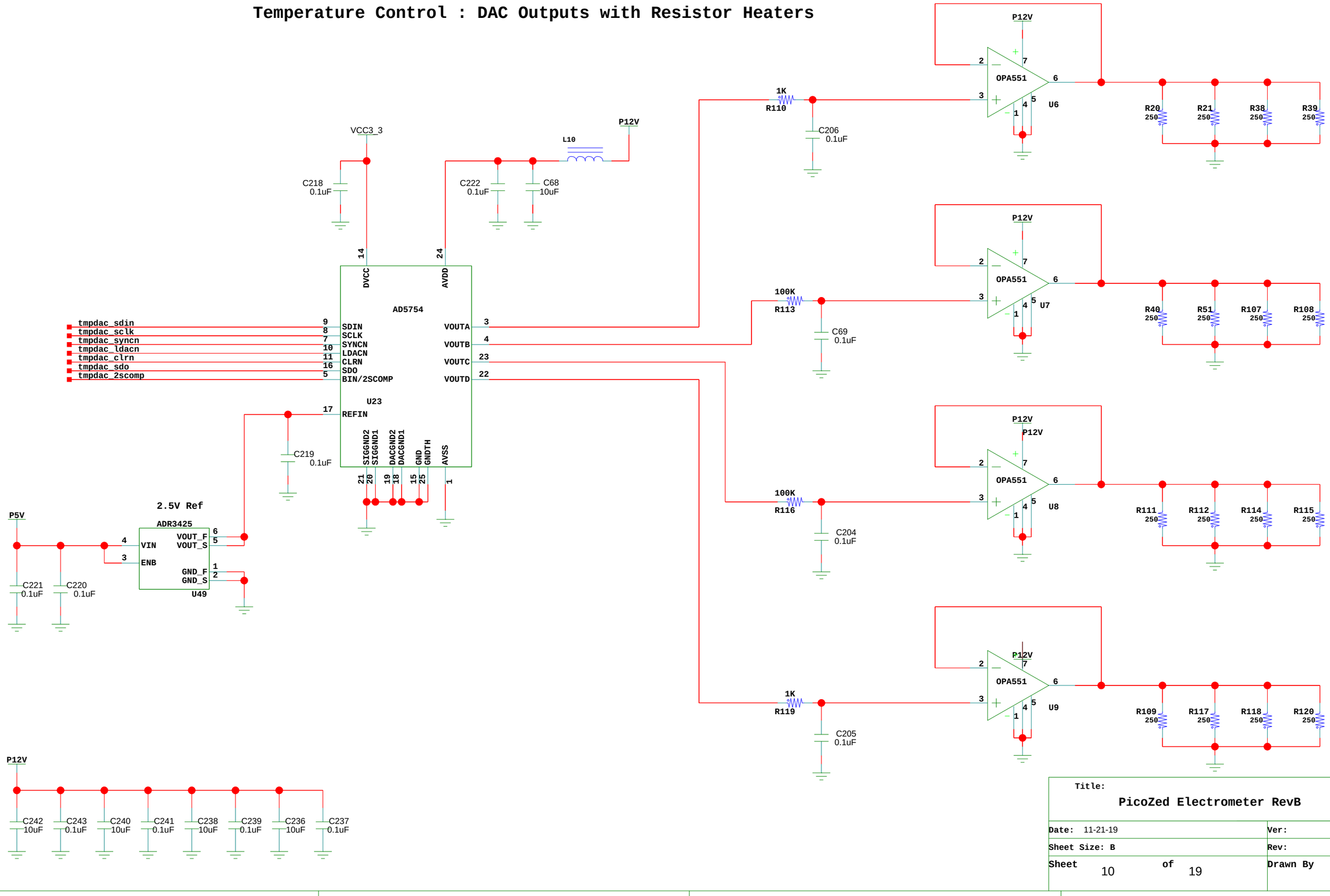

Title: PicoZed Electrometer RevB	
Date: 11-21-19	Ver:
Sheet Size: B	Rev:
Sheet 10 of 19	Drawn By J. Mead

picoZED Connectors JX1 & JX2

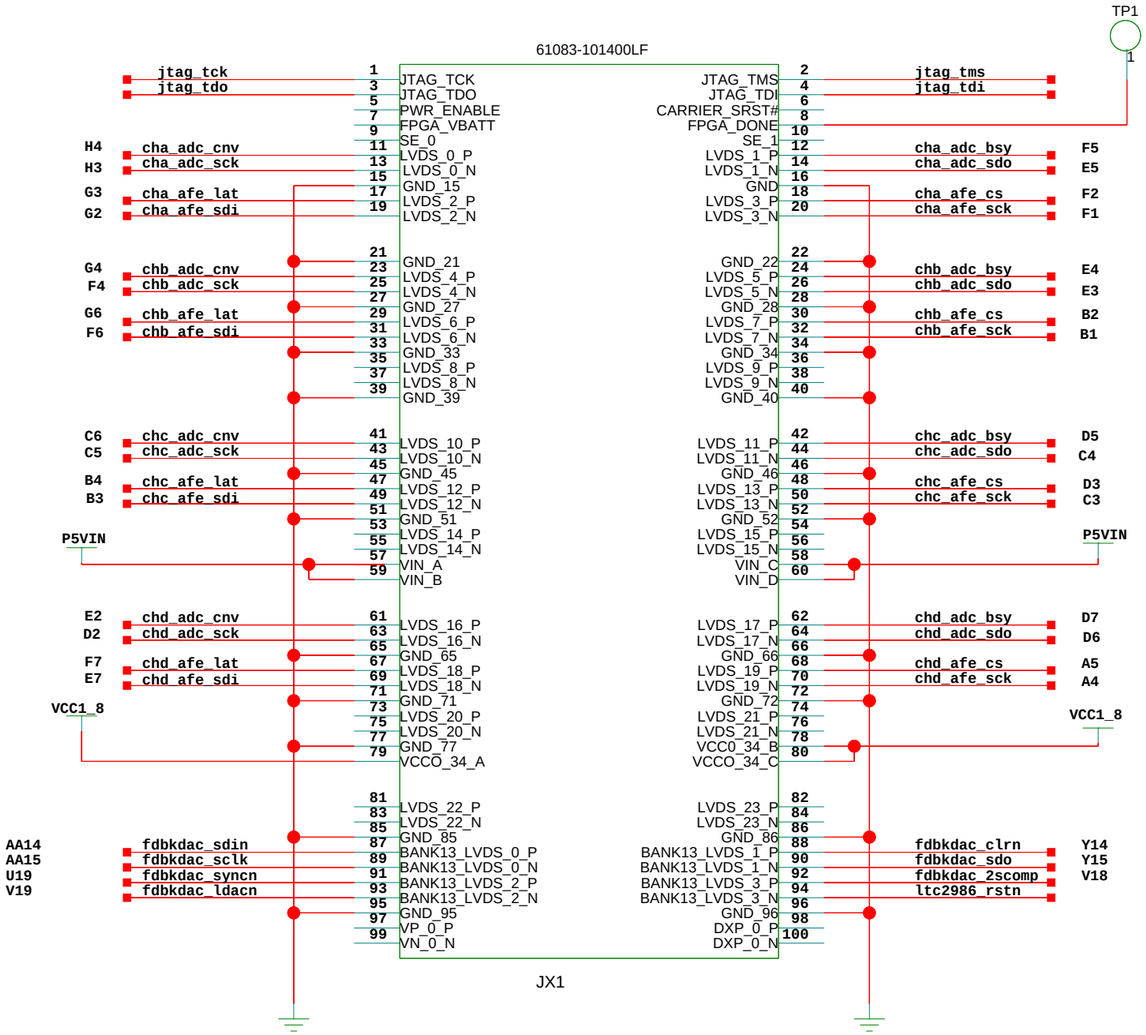

Connects to BANK 35 (1.8V) LVDS

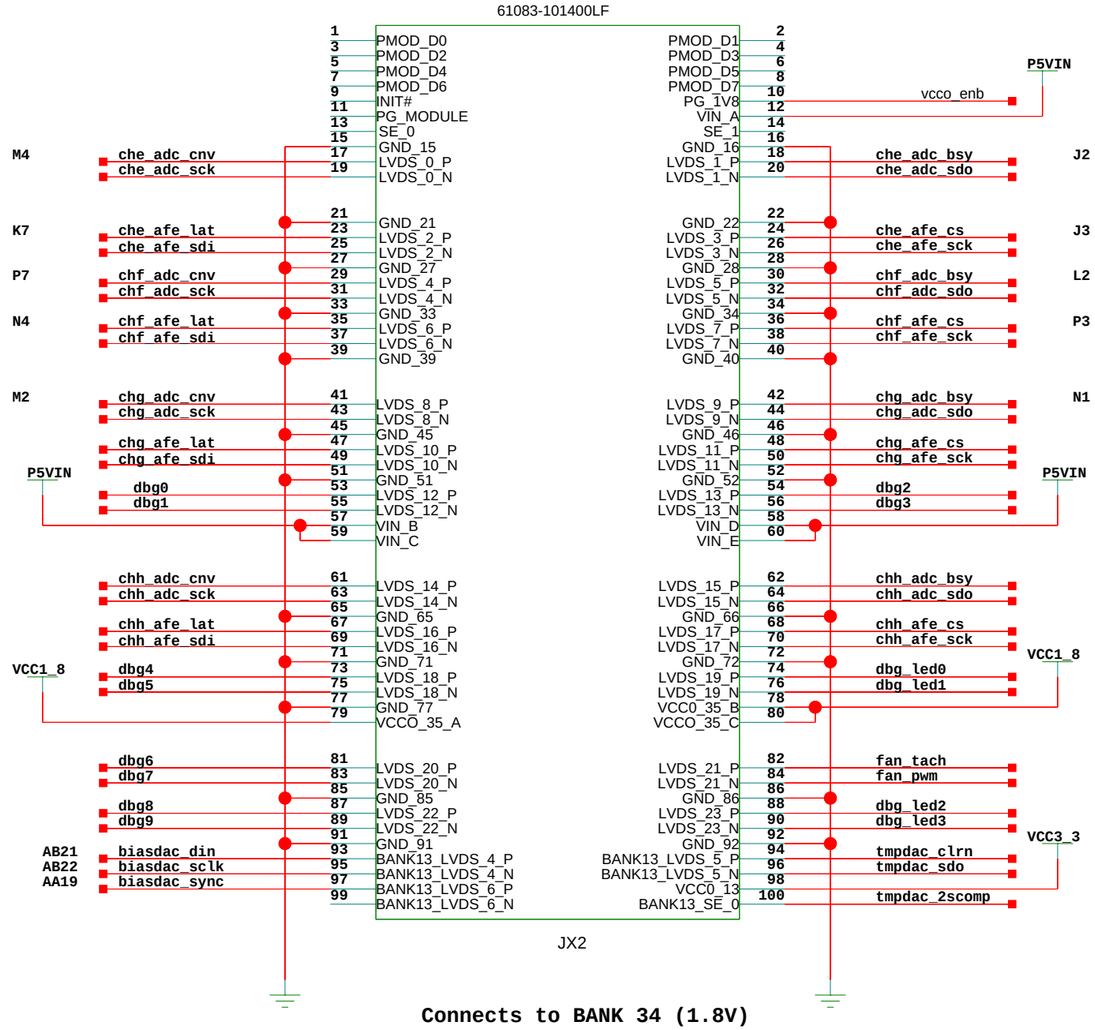

Connects to BANK 34 (1.8V)

Title: PicoZed Electrometer RevB	
Date: 11-21-19	**Ver:**
Sheet Size: B	**Rev:**
Sheet 11 **of** 19	**Drawn By** J. Mead

picoZED Connector JX3

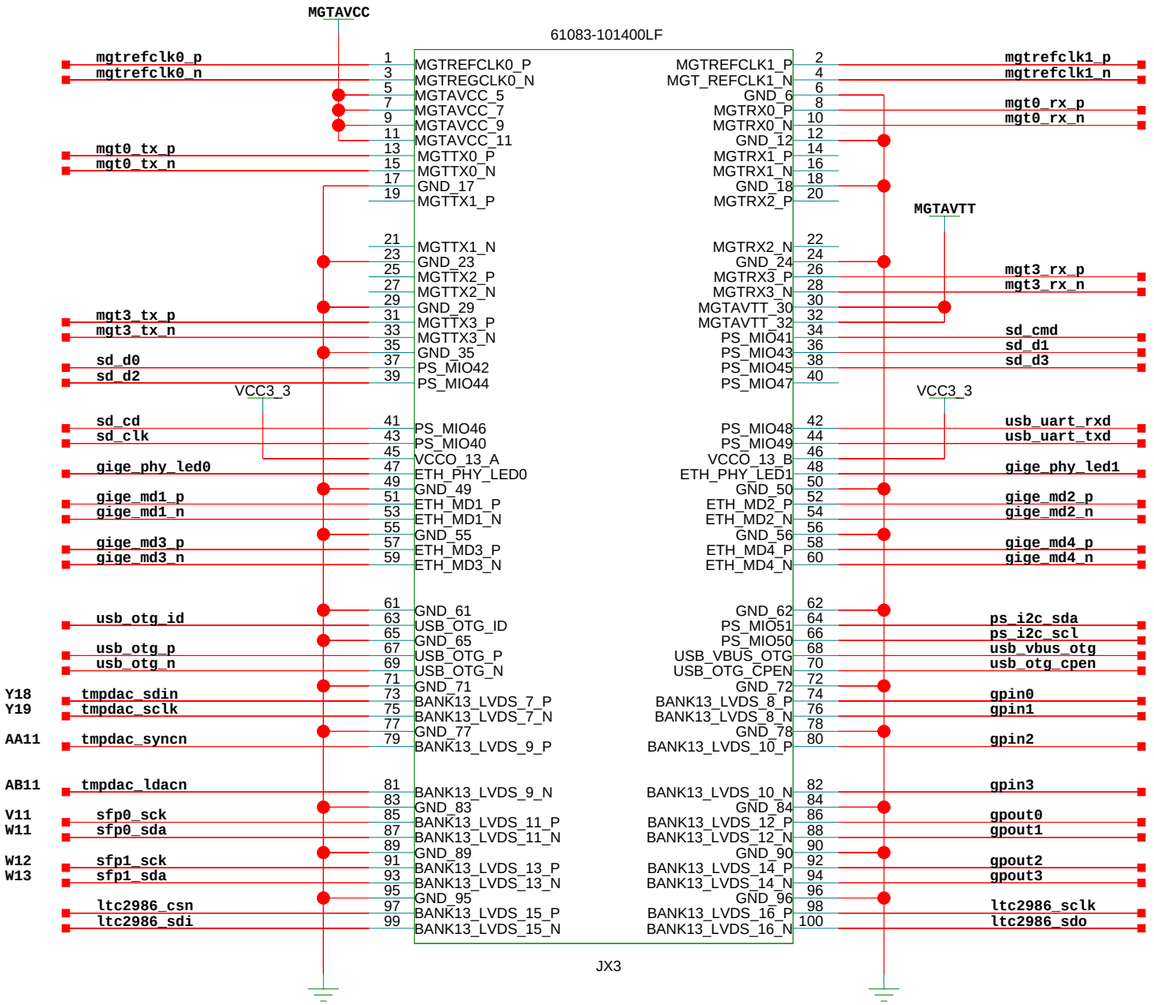

Title: PicoZed Electrometer RevB	
Date: 11-21-19	Ver:
Sheet Size: B	Rev:
Sheet 12 of 19	Drawn By J. Mead

Digital Power Regulators

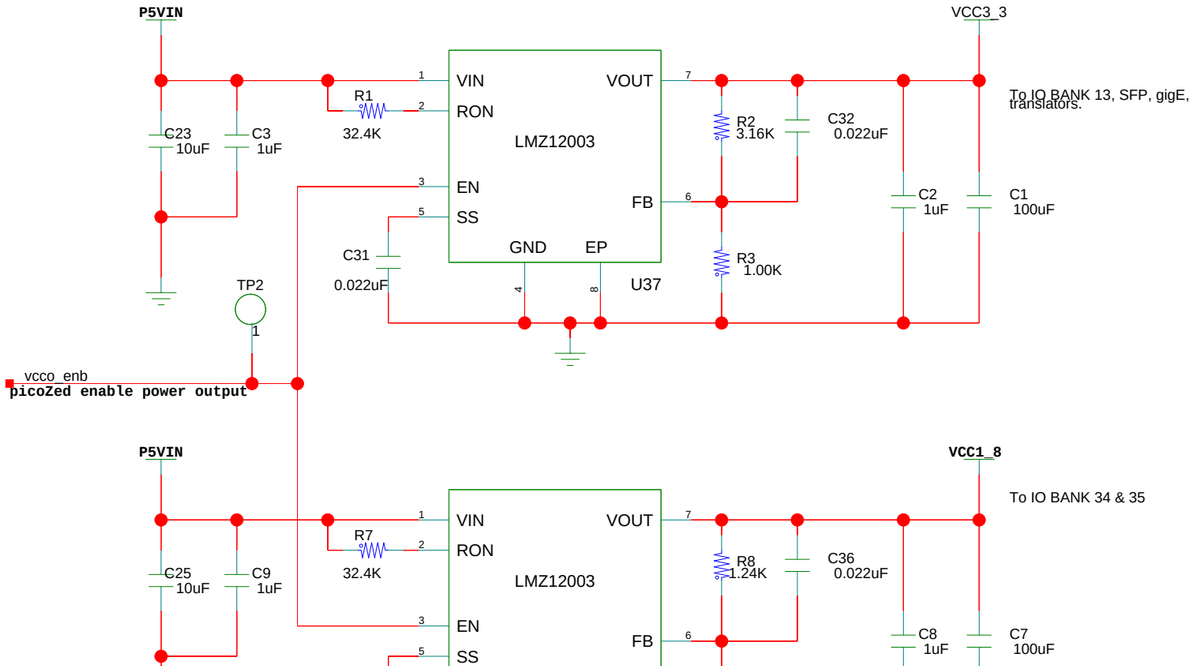

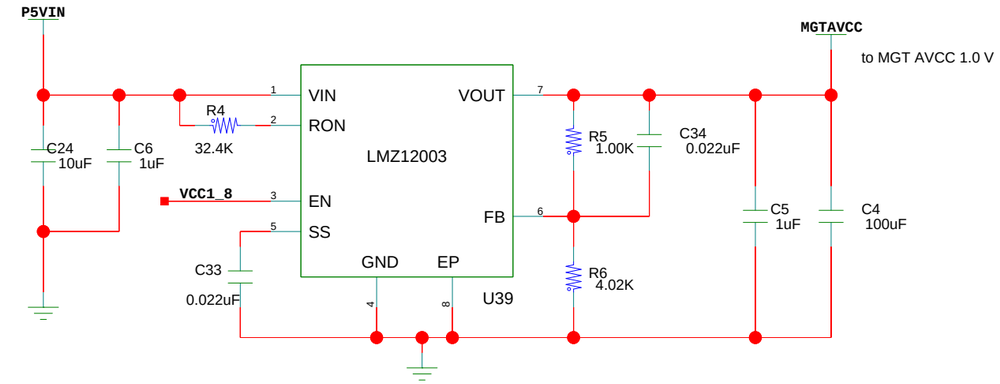

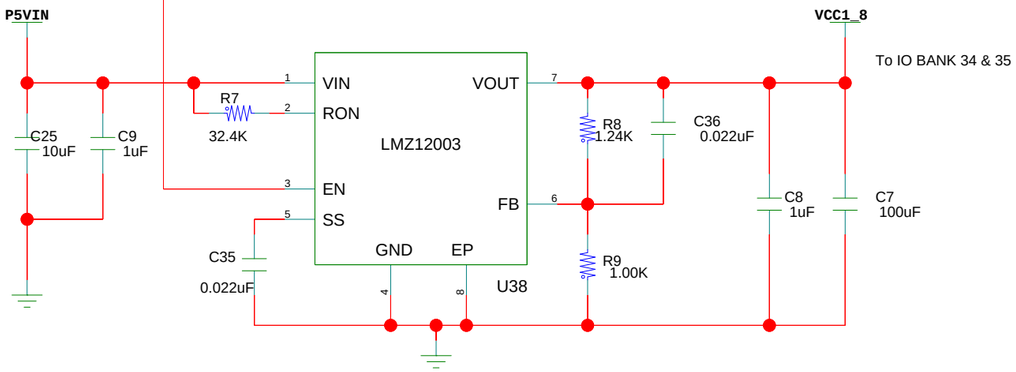

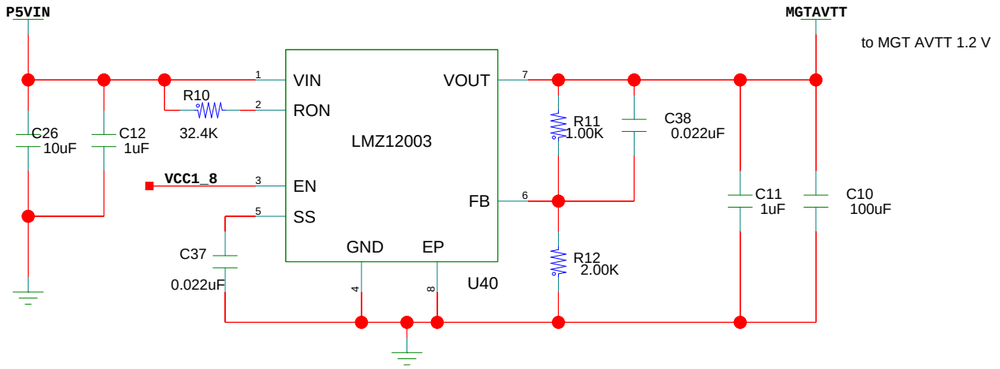

Title: PicoZed Electrometer RevB	
Date: 11-21-19	**Ver:**
Sheet Size: B	**Rev:**
Sheet 13 **of** 19	**Drawn By** J. Mead

Front End Regulators

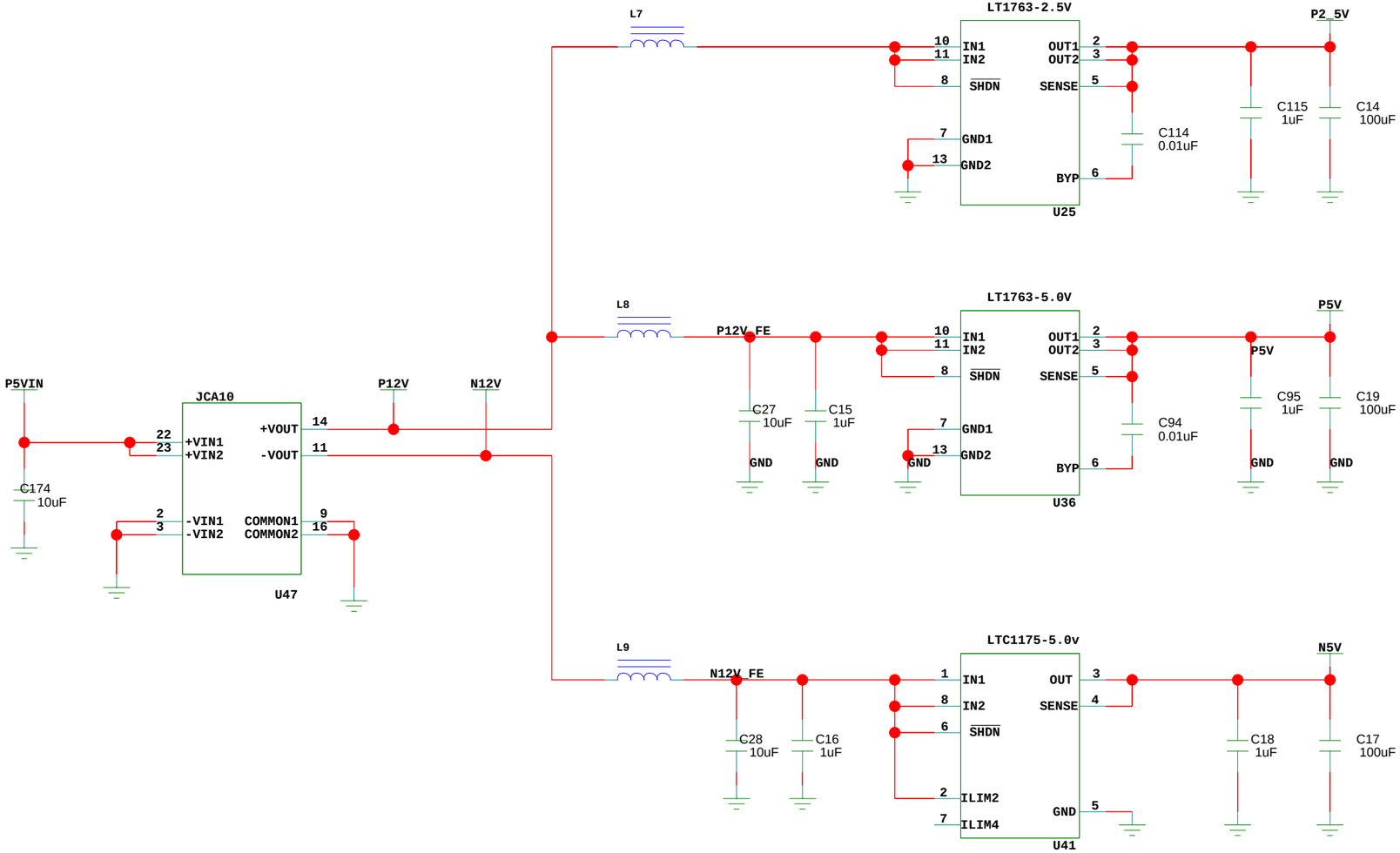

Title: PicoZed Electrometer RevB	
Date: 11-21-19	Ver:
Sheet Size: B	Rev:
Sheet 14 of 19	Drawn By J. Mead

Miscellaneous

2.1 mm Power Jack

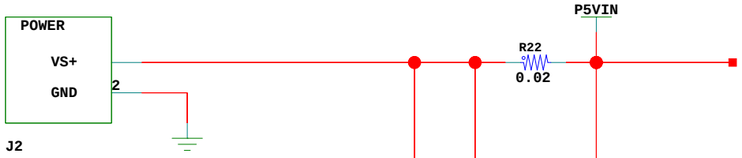

Debug Header

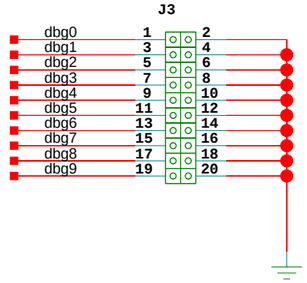

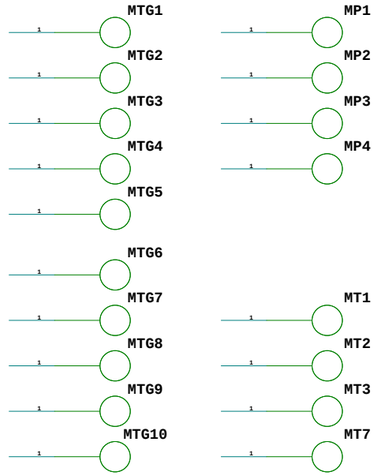

VI Readback

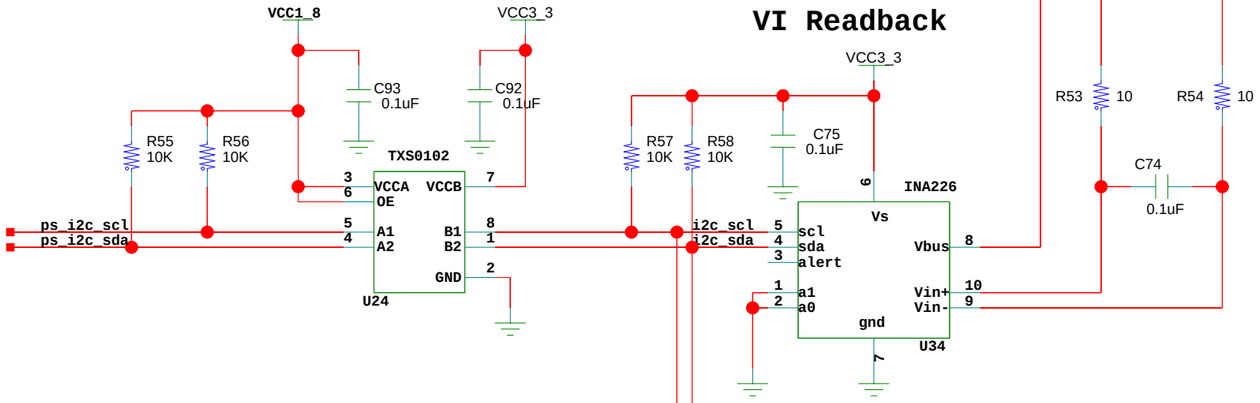

JTAG Header

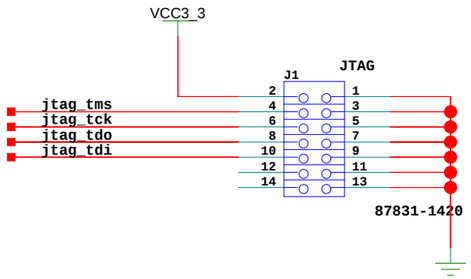

Temp Sensors

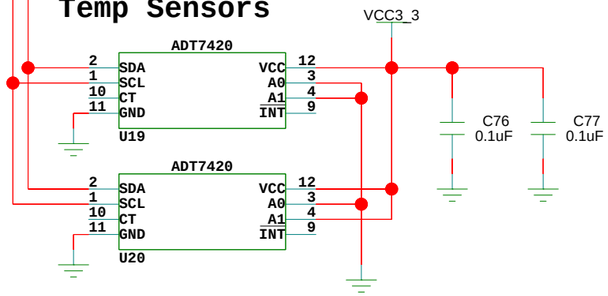

Fan Connector
4 wire with PWM control

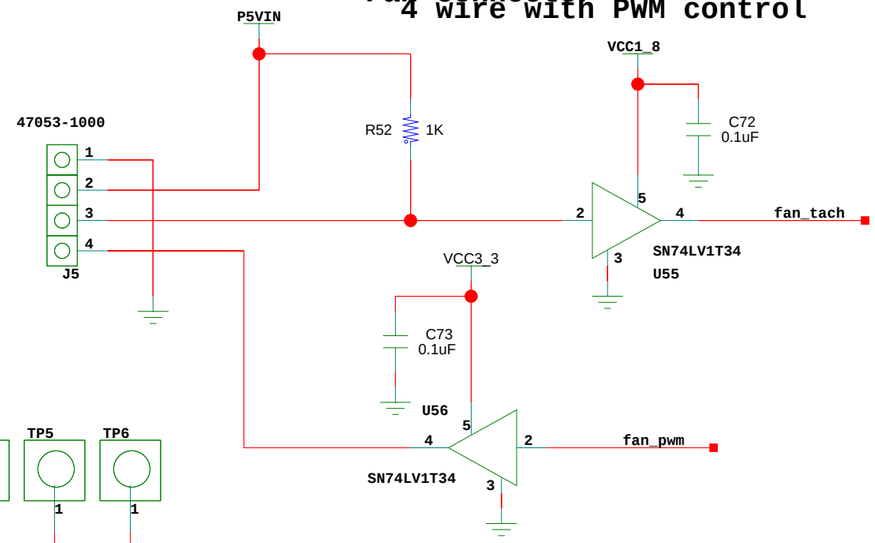

Front Panel Leds

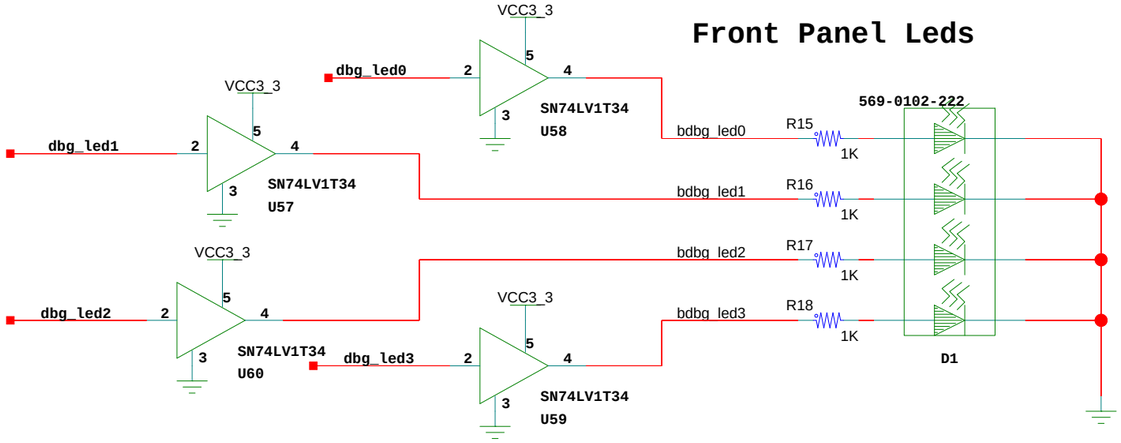

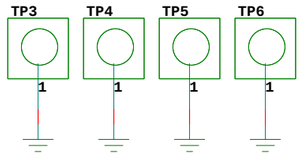

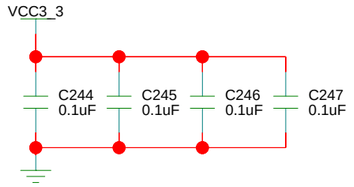

Title: PicoZed Electrometer RevB	
Date: 11-21-19	Ver:
Sheet Size: B	Rev:
Sheet 15 of 19	Drawn By J. Mead

SFP Connecters

Event Receiver

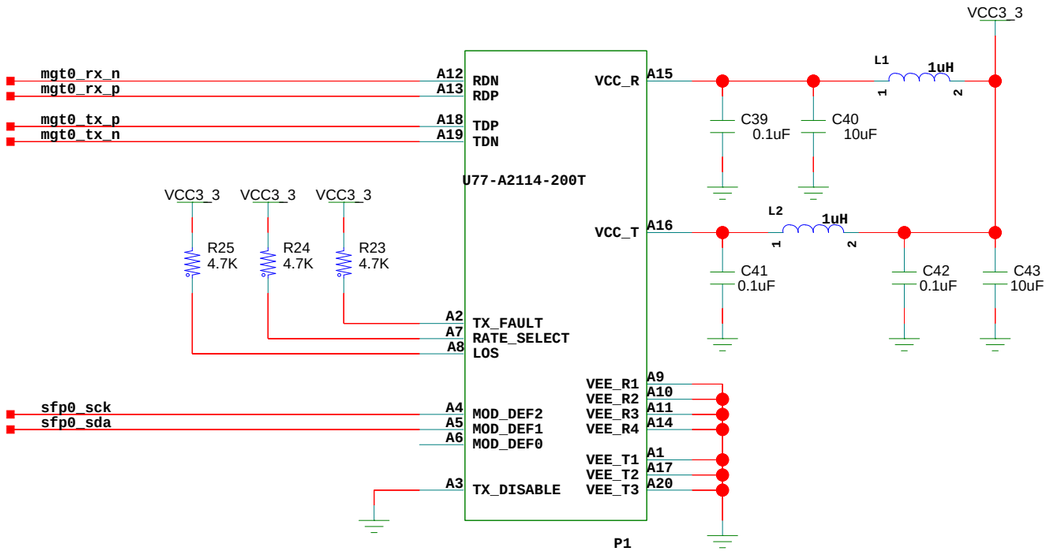

124.92MHz

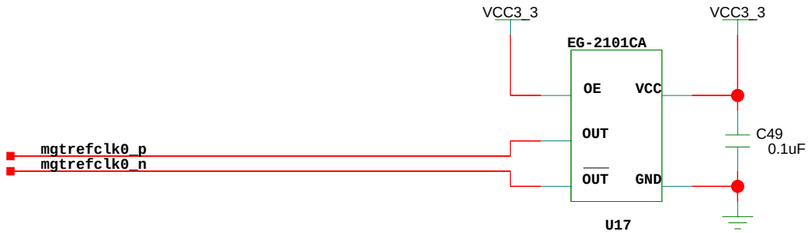

Data Transceiver

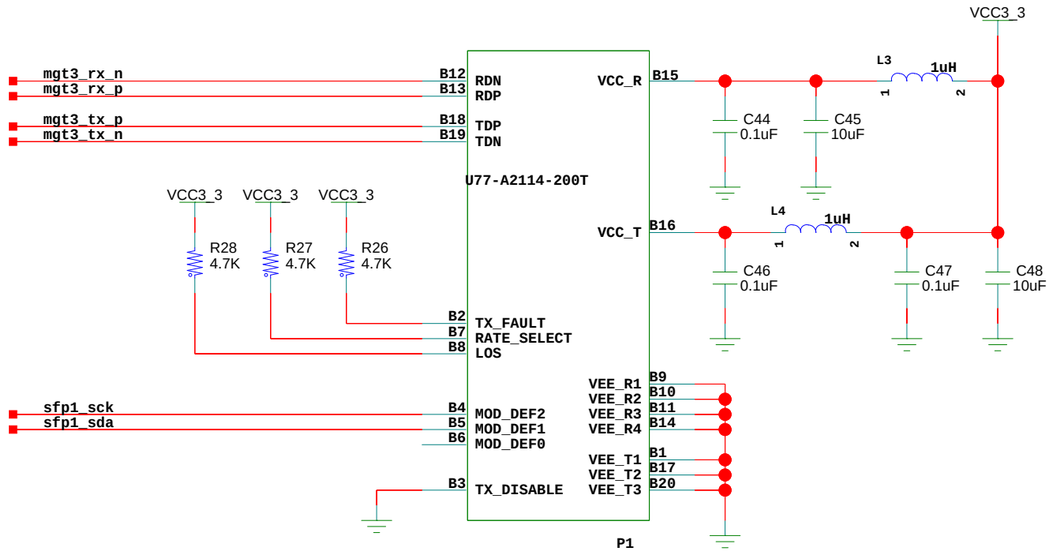

200MHz

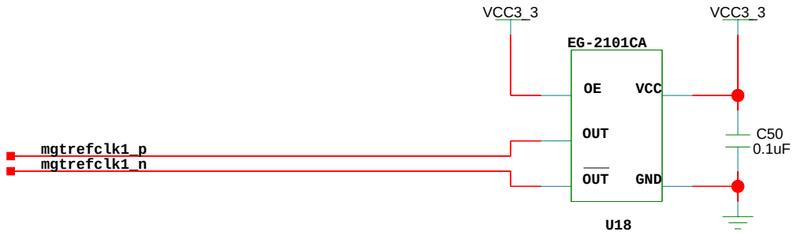

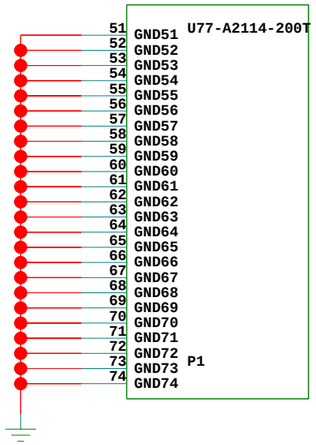

Title: PicoZed Electrometer RevB	
Date: 11-21-19	Ver:
Sheet Size: B	Rev:
Sheet 16 of 19	Drawn By J. Mead

Zynq Peripherals : SDCARD / UART

USB UART

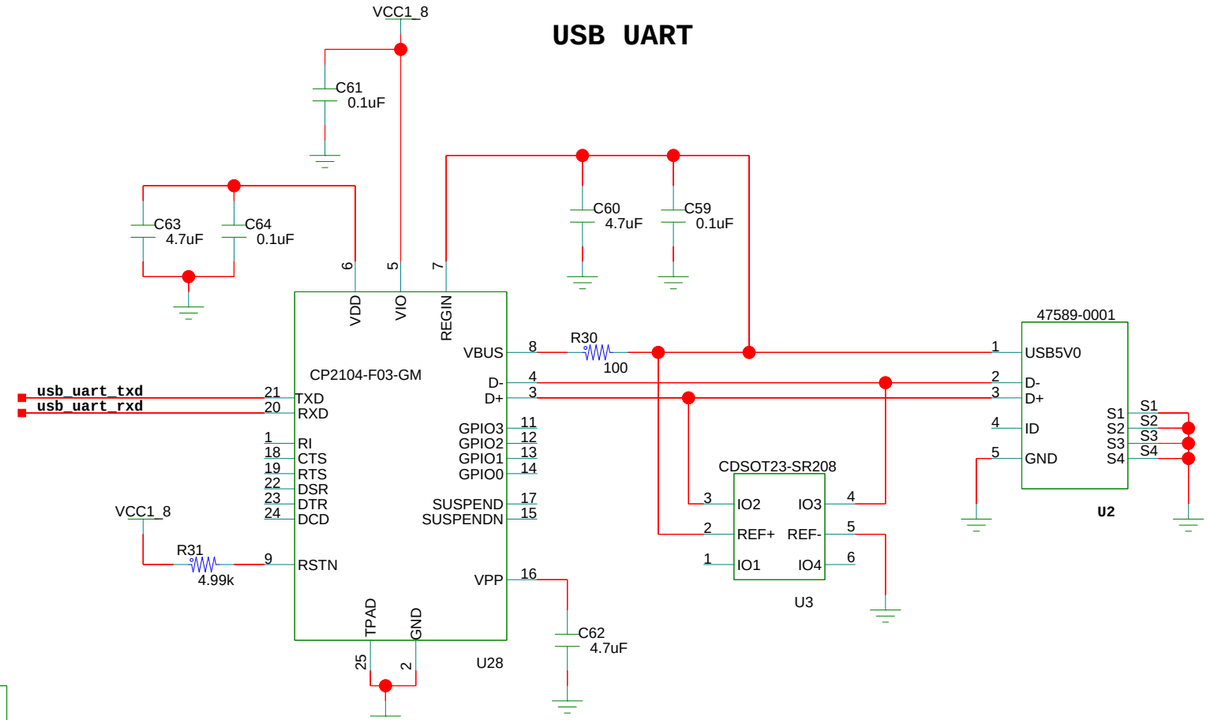

SD card

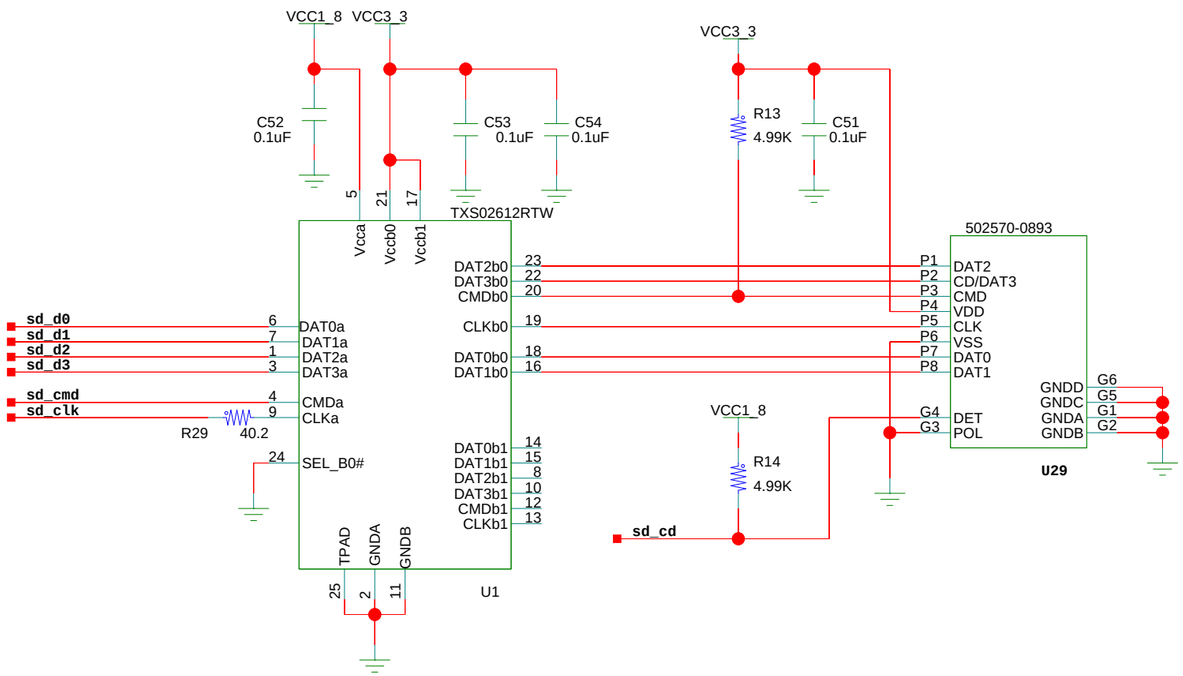

Title: PicoZed Electrometer RevB	
Date: 11-21-19	**Ver:**
Sheet Size: B	**Rev:**
Sheet 17 **of** 19	**Drawn By** J. Mead

Zynq Peripherals : Gigabit Ethernet / USB

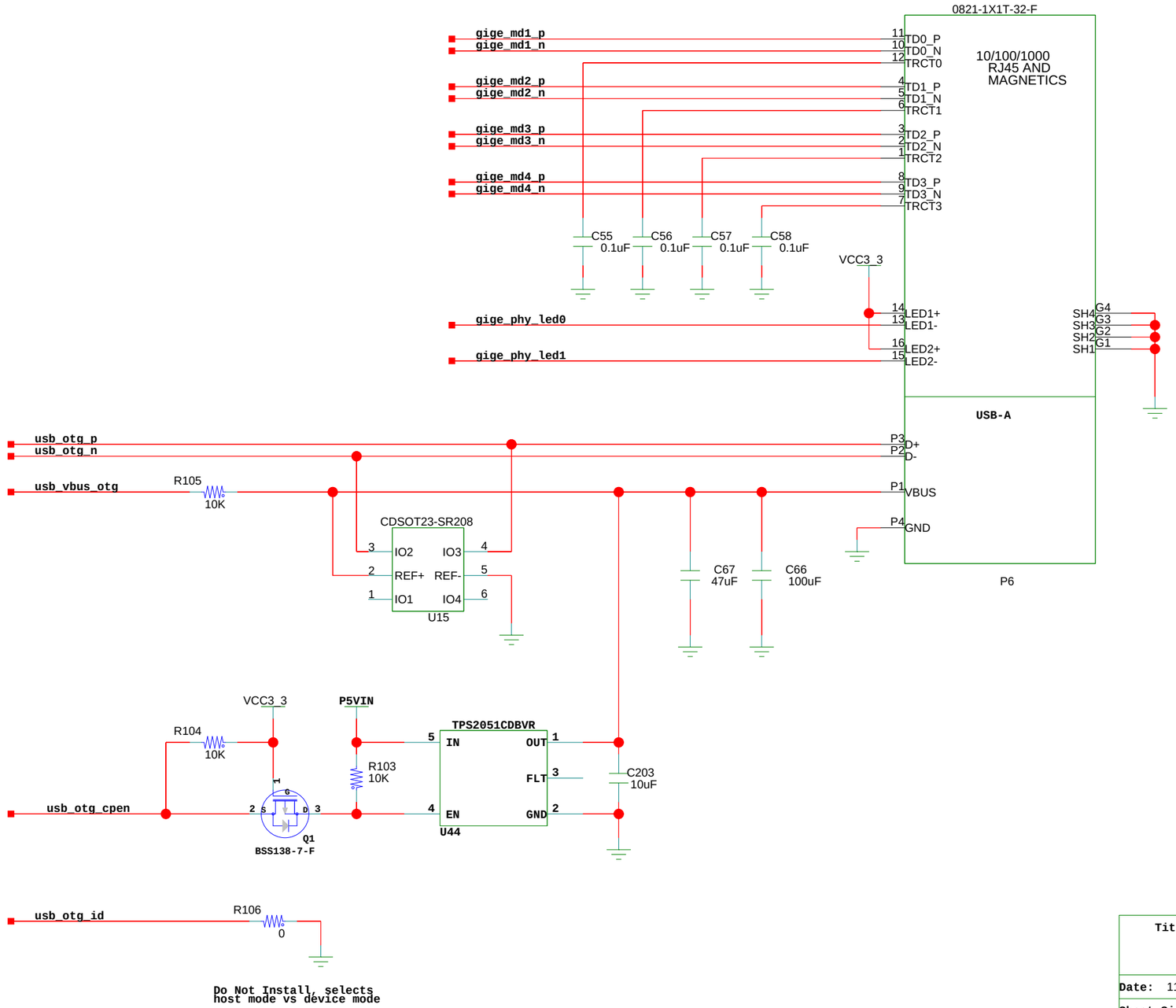

Title: PicoZed Electrometer RevB	
Date: 11-21-19	Ver:
Sheet Size: B	Rev:
Sheet 18 of 19	Drawn By J. Mead

Title: PicoZed Electrometer RevB			
Date: 11-21-19		**Ver:**	
Sheet Size: B		**Rev:**	
Sheet 19	**of** 19	**Drawn By** J. Mead	