RL78/G13

RENESAS MCU

R01DS0131EJ0330
Rev.3.30
Mar 31, 2016

True Low Power Platform (as low as 66 μA/MHz, and 0.57 μA for RTC + LVD), 1.6 V to 5.5 V operation, 16 to 512 Kbyte Flash, 41 DMIPS at 32 MHz, for General Purpose Applications

1. OUTLINE

1.1 Features

Ultra-low power consumption technology
- V_{DD} = single power supply voltage of 1.6 to 5.5 V
- HALT mode
- STOP mode
- SNOOZE mode

RL78 CPU core
- CISC architecture with 3-stage pipeline
- Minimum instruction execution time: Can be changed from high speed (0.03125 μs: @ 32 MHz operation with high-speed on-chip oscillator) to ultra-low speed (30.5 μs: @ 32.768 kHz operation with subsystem clock)
- Address space: 1 MB
- General-purpose registers: (8-bit register × 8) × 4 banks
- On-chip RAM: 2 to 32 KB

Code flash memory
- Code flash memory: 16 to 512 KB
- Block size: 1 KB
- Prohibition of block erase and rewriting (security function)
- On-chip debug function
- Self-programming (with boot swap function/flash shield window function)

Data Flash Memory
- Data flash memory: 4 KB to 8 KB
- Back ground operation (BGO): Instructions can be executed from the program memory while rewriting the data flash memory.
- Number of rewrites: 1,000,000 times (TYP.)
- Voltage of rewrites: V_{DD} = 1.8 to 5.5 V

High-speed on-chip oscillator
- Select from 32 MHz, 24 MHz, 16 MHz, 12 MHz, 8 MHz, 6 MHz, 4 MHz, 3 MHz, 2 MHz, and 1 MHz
- High accuracy: +/- 1.0 % (V_{DD} = 1.8 to 5.5 V, T_A = -20 to +85°C)

Operating ambient temperature
- T_A = -40 to +85°C (A: Consumer applications, D: Industrial applications)
- T_A = -40 to +105°C (G: Industrial applications)

Power management and reset function
- On-chip power-on-reset (POR) circuit
- On-chip voltage detector (LVD) (Select interrupt and reset from 14 levels)

DMA (Direct Memory Access) controller
- 2/4 channels
- Number of clocks during transfer between 8/16-bit SFR and internal RAM: 2 clocks

Multiplier and divider/multiply-accumulator
- 16 bits × 16 bits = 32 bits (Unsigned or signed)
- 32 bits ÷ 32 bits = 32 bits (Unsigned)
- 16 bits × 16 bits + 32 bits = 32 bits (Unsigned or signed)

Serial interface
- CSI: 2 to 8 channels
- UART/UART (LIN-bus supported): 2 to 4 channels
- I^2C/Simplified I^2C communication: 2 to 8 channels

Timer
- 16-bit timer: 8 to 16 channels
- 12-bit interval timer: 1 channel
- Real-time clock: 1 channel (calendar for 99 years, alarm function, and clock correction function)
- Watchdog timer: 1 channel (operable with the dedicated low-speed on-chip oscillator)

A/D converter
- 8/10-bit resolution A/D converter (V_{DD} = 1.6 to 5.5 V)
- Analog input: 6 to 26 channels
- Internal reference voltage (1.45 V) and temperature sensor [Note 1]

I/O port
- I/O port: 16 to 120 (N-ch open drain I/O [withstand voltage of 6 V]: 0 to 4, N-ch open drain I/O [V_{DD} withstand voltage [Note 2]/EV_{DD} withstand voltage [Note 3]]: 5 to 25)
- Can be set to N-ch open drain, TTL input buffer, and on-chip pull-up resistor
- Different potential interface: Can connect to a 1.8/2.5/3 V device
- On-chip key interrupt function
- On-chip clock output/buzzer output controller

Others
- On-chip BCD (binary-coded decimal) correction circuit

Notes 1. Can be selected only in HS (high-speed main) mode
2. Products with 20 to 52 pins
3. Products with 64 to 128 pins

Remark The functions mounted depend on the product. See 1.6 Outline of Functions.

○ ROM, RAM capacities

Flash ROM	Data flash	RAM	RL78/G13					
			20 pins	24 pins	25 pins	30 pins	32 pins	36 pins
128 KB	8 KB	12 KB	–	–	–	R5F100AG	R5F100BG	R5F100CG
	–		–	–	–	R5F101AG	R5F101BG	R5F101CG
96 KB	8 KB	8 KB	–	–	–	R5F100AF	R5F100BF	R5F100CF
	–		–	–	–	R5F101AF	R5F101BF	R5F101CF
64 KB	4 KB	4 KB Note	R5F1006E	R5F1007E	R5F1008E	R5F100AE	R5F100BE	R5F100CE
	–		R5F1016E	R5F1017E	R5F1018E	R5F101AE	R5F101BE	R5F101CE
48 KB	4 KB	3 KB Note	R5F1006D	R5F1007D	R5F1008D	R5F100AD	R5F100BD	R5F100CD
	–		R5F1016D	R5F1017D	R5F1018D	R5F101AD	R5F101BD	R5F101CD
32 KB	4 KB	2 KB	R5F1006C	R5F1007C	R5F1008C	R5F100AC	R5F100BC	R5F100CC
	–		R5F1016C	R5F1017C	R5F1018C	R5F101AC	R5F101BC	R5F101CC
16 KB	4 KB	2 KB	R5F1006A	R5F1007A	R5F1008A	R5F100AA	R5F100BA	R5F100CA
	–		R5F1016A	R5F1017A	R5F1018A	R5F101AA	R5F101BA	R5F101CA

Flash ROM	Data flash	RAM	RL78/G13							
			40 pins	44 pins	48 pins	52 pins	64 pins	80 pins	100 pins	128 pins
512 KB	8 KB	32 KB Note	–	R5F100FL	R5F100GL	R5F100JL	R5F100LL	R5F100ML	R5F100PL	R5F100SL
	–		–	R5F101FL	R5F101GL	R5F101JL	R5F101LL	R5F101ML	R5F101PL	R5F101SL
384 KB	8 KB	24 KB	–	R5F100FK	R5F100GK	R5F100JK	R5F100LK	R5F100MK	R5F100PK	R5F100SK
	–		–	R5F101FK	R5F101GK	R5F101JK	R5F101LK	R5F101MK	R5F101PK	R5F101SK
256 KB	8 KB	20 KB Note	–	R5F100FJ	R5F100GJ	R5F100JJ	R5F100LJ	R5F100MJ	R5F100PJ	R5F100SJ
	–		–	R5F101FJ	R5F101GJ	R5F101JJ	R5F101LJ	R5F101MJ	R5F101PJ	R5F101SJ
192 KB	8 KB	16 KB	R5F100EH	R5F100FH	R5F100GH	R5F100JH	R5F100LH	R5F100MH	R5F100PH	R5F100SH
	–		R5F101EH	R5F101FH	R5F101GH	R5F101JH	R5F101LH	R5F101MH	R5F101PH	R5F101SH
128 KB	8 KB	12 KB	R5F100EG	R5F100FG	R5F100GG	R5F100JG	R5F100LG	R5F100MG	R5F100PG	–
	–		R5F101EG	R5F101FG	R5F101GG	R5F101JG	R5F101LG	R5F101MG	R5F101PG	–
96 KB	8 KB	8 KB	R5F100EF	R5F100FF	R5F100GF	R5F100JF	R5F100LF	R5F100MF	R5F100PF	–
	–		R5F101EF	R5F101FF	R5F101GF	R5F101JF	R5F101LF	R5F101MF	R5F101PF	–
64 KB	4 KB	4 KB Note	R5F100EE	R5F100FE	R5F100GE	R5F100JE	R5F100LE	–	–	–
	–		R5F101EE	R5F101FE	R5F101GE	R5F101JE	R5F101LE	–	–	–
48 KB	4 KB	3 KB Note	R5F100ED	R5F100FD	R5F100GD	R5F100JD	R5F100LD	–	–	–
	–		R5F101ED	R5F101FD	R5F101GD	R5F101JD	R5F101LD	–	–	–
32 KB	4 KB	2 KB	R5F100EC	R5F100FC	R5F100GC	R5F100JC	R5F100LC	–	–	–
	–		R5F101EC	R5F101FC	R5F101GC	R5F101JC	R5F101LC	–	–	–
16 KB	4 KB	2 KB	R5F100EA	R5F100FA	R5F100GA	–	–	–	–	–
	–		R5F101EA	R5F101FA	R5F101GA	–	–	–	–	–

Note The flash library uses RAM in self-programming and rewriting of the data flash memory.
The target products and start address of the RAM areas used by the flash library are shown below.

R5F100xD, R5F101xD (x = 6 to 8, A to C, E to G, J, L): Start address FF300H
R5F100xE, R5F101xE (x = 6 to 8, A to C, E to G, J, L): Start address FEF00H
R5F100xJ, R5F101xJ (x = F, G, J, L, M, P): Start address FAF00H
R5F100xL, R5F101xL (x = F, G, J, L, M, P, S): Start address F7F00H

For the RAM areas used by the flash library, see **Self RAM list of Flash Self-Programming Library for RL78 Family (R20UT2944)**.

1.2 List of Part Numbers

Figure 1-1. Part Number, Memory Size, and Package of RL78/G13

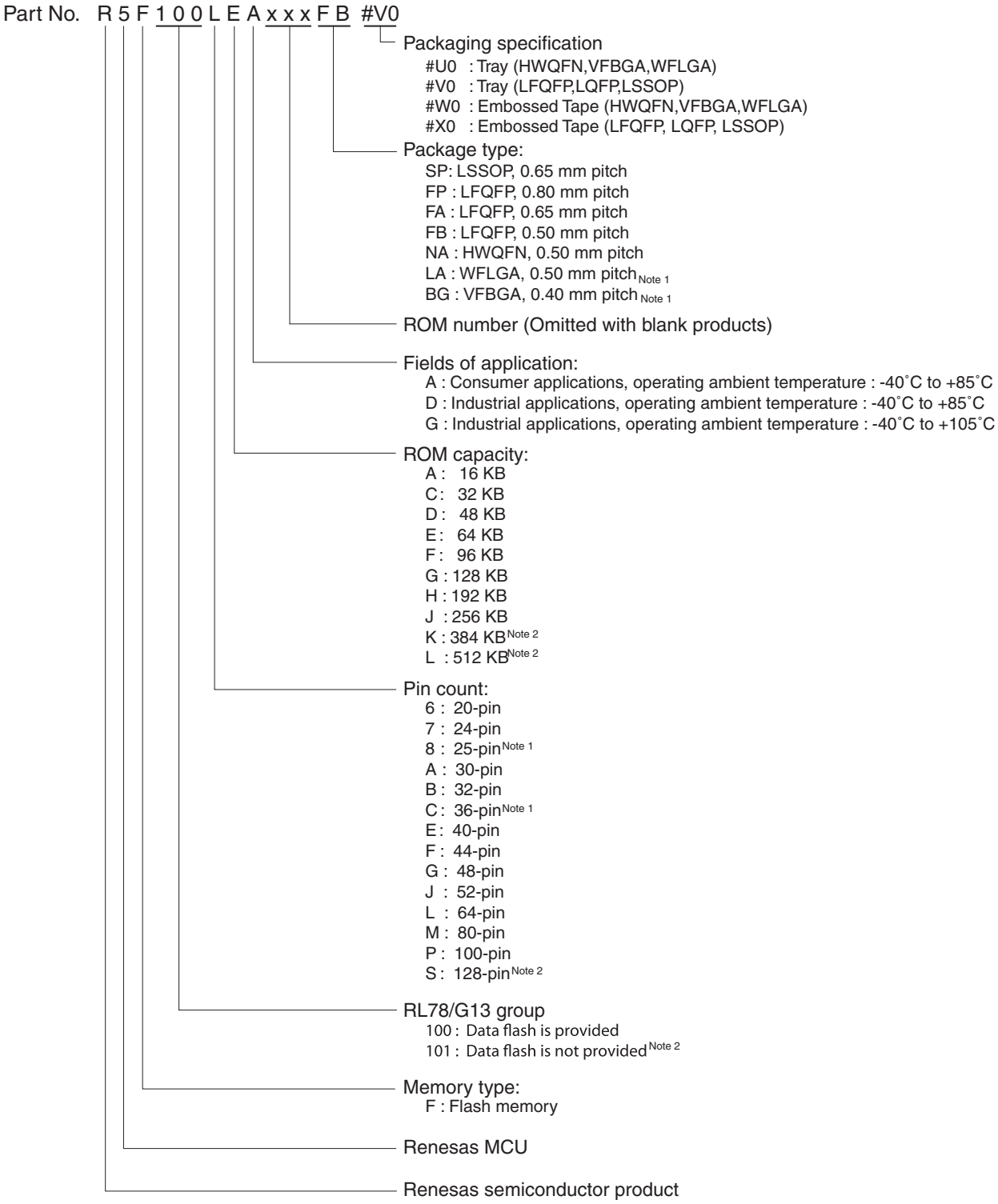

Notes

1. Products only for “A: Consumer applications (T_A = −40 to +85°C)”, and "G: Industrial applications (T_A = −40 to +105°C)"
2. Products only for “A: Consumer applications (T_A = −40 to +85°C)”, and "D: Industrial applications (T_A = −40 to +85°C)"

Table 1-1. List of Ordering Part Numbers

(1/12)

Pin count	Package	Data flash	Fields of Application [Note]	Ordering Part Number
20 pins	20-pin plastic LSSOP (7.62 mm (300), 0.65 mm pitch)	Mounted	A	R5F1006AASP#V0, R5F1006CASP#V0, R5F1006DASP#V0, R5F1006EASP#V0 R5F1006AASP#X0, R5F1006CASP#X0, R5F1006DASP#X0, R5F1006EASP#X0
			D	R5F1006ADSP#V0, R5F1006CDSP#V0, R5F1006DDSP#V0, R5F1006EDSP#V0 R5F1006ADSP#X0, R5F1006CDSP#X0, R5F1006DDSP#X0, R5F1006EDSP#X0
			G	R5F1006AGSP#V0, R5F1006CGSP#V0, R5F1006DGSP#V0, R5F1006EGSP#V0 R5F1006AGSP#X0, R5F1006CGSP#X0, R5F1006DGSP#X0, R5F1006EGSP#X0
		Not mounted	A	R5F1016AASP#V0, R5F1016CASP#V0, R5F1016DASP#V0, R5F1016EASP#V0 R5F1016AASP#X0, R5F1016CASP#X0, R5F1016DASP#X0, R5F1016EASP#X0
			D	R5F1016ADSP#V0, R5F1016CDSP#V0, R5F1016DDSP#V0, R5F1016EDSP#V0 R5F1016ADSP#X0, R5F1016CDSP#X0, R5F1016DDSP#X0, R5F1016EDSP#X0
24 pins	24-pin plastic HWQFN (4 × 4mm, 0.5 mm pitch)	Mounted	A	R5F1007AANA#U0, R5F1007CANA#U0, R5F1007DANA#U0, R5F1007EANA#U0 R5F1007AANA#W0, R5F1007CANA#W0, R5F1007DANA#W0, R5F1007EANA#W0
			D	R5F1007ADNA#U0, R5F1007CDNA#U0, R5F1007DDNA#U0, R5F1007EDNA#U0 R5F1007ADNA#W0, R5F1007CDNA#W0, R5F1007DDNA#W0, R5F1007EDNA#W0
			G	R5F1007AGNA#U0, R5F1007CGNA#U0, R5F1007DGNA#U0, R5F1007EGNA#U0 R5F1007AGNA#W0, R5F1007CGNA#W0, R5F1007DGNA#W0, R5F1007EGNA#W0
		Not mounted	A	R5F1017AANA#U0, R5F1017CANA#U0, R5F1017DANA#U0, R5F1017EANA#U0 R5F1017AANA#W0, R5F1017CANA#W0, R5F1017DANA#W0, R5F1017EANA#W0
			D	R5F1017ADNA#U0, R5F1017CDNA#U0, R5F1017DDNA#U0, R5F1017EDNA#U0 R5F1017ADNA#W0, R5F1017CDNA#W0, R5F1017DDNA#W0, R5F1017EDNA#W0

Note For the fields of application, refer to **Figure 1-1 Part Number, Memory Size, and Package of RL78/G13**.

Caution The ordering part numbers represent the numbers at the time of publication. For the latest ordering part numbers, refer to the target product page of the Renesas Electronics website.

Table 1-1. List of Ordering Part Numbers

(2/12)

Pin count	Package	Data flash	Fields of Application Note	Ordering Part Number
25 pins	25-pin plastic WFLGA (3 × 3 mm, 0.5 mm pitch)	Mounted	A	R5F1008AALA#U0, R5F1008CALA#U0, R5F1008DALA#U0, R5F1008EALA#U0 R5F1008AALA#W0, R5F1008CALA#W0, R5F1008DALA#W0, R5F1008EALA#W0
			G	R5F1008AGLA#U0, R5F1008CGLA#U0, R5F1008DGLA#U0, R5F1008EGLA#U0 R5F1008AGLA#W0, R5F1008CGLA#W0, R5F1008DGLA#W0, R5F1008EGLA#W0
		Not mounted	A	R5F1018AALA#U0, R5F1018CALA#U0, R5F1018DALA#U0, R5F1018EALA#U0 R5F1018AALA#W0, R5F1018CALA#W0, R5F1018DALA#W0, R5F1018EALA#W0
30 pins	30-pin plastic LSSOP (7.62 mm (300), 0.65 mm pitch)	Mounted	A	R5F100AAASP#V0, R5F100ACASP#V0, R5F100ADASP#V0, R5F100AEASP#V0, R5F100AFASP#V0, R5F100AGASP#V0 R5F100AAASP#X0, R5F100ACASP#X0, R5F100ADASP#X0 R5F100AEASP#X0, R5F100AFASP#X0, R5F100AGASP#X0
			D	R5F100AADSP#V0, R5F100ACDSP#V0, R5F100ADDSP#V0, R5F100AEDSP#V0, R5F100AFDSP#V0, R5F100AGDSP#V0 R5F100AADSP#X0, R5F100ACDSP#X0, R5F100ADDSP#X0, R5F100AEDSP#X0, R5F100AFDSP#X0, R5F100AGDSP#X0
			G	R5F100AAGSP#V0, R5F100ACGSP#V0, R5F100ADGSP#V0,R5F100AEGSP#V0, R5F100AFGSP#V0, R5F100AGGSP#V0 R5F100AAGSP#X0, R5F100ACGSP#X0, R5F100ADGSP#X0,R5F100AEGSP#X0, R5F100AFGSP#X0, R5F100AGGSP#X0
		Not mounted	A	R5F101AAASP#V0, R5F101ACASP#V0, R5F101ADASP#V0, R5F101AEASP#V0, R5F101AFASP#V0, R5F101AGASP#V0 R5F101AAASP#X0, R5F101ACASP#X0, R5F101ADASP#X0, R5F101AEASP#X0, R5F101AFASP#X0, R5F101AGASP#X0
			D	R5F101AADSP#V0, R5F101ACDSP#V0, R5F101ADDSP#V0, R5F101AEDSP#V0, R5F101AFDSP#V0, R5F101AGDSP#V0 R5F101AADSP#X0, R5F101ACDSP#X0, R5F101ADDSP#X0, R5F101AEDSP#X0, R5F101AFDSP#X0, R5F101AGDSP#X0
32 pins	32-pin plastic HWQFN (5 × 5 mm, 0.5 mm pitch)	Mounted	A	R5F100BAANA#U0, R5F100BCANA#U0, R5F100BDANA#U0, R5F100BEANA#U0, R5F100BFANA#U0, R5F100BGANA#U0 R5F100BAANA#W0, R5F100BCANA#W0, R5F100BDANA#W0, R5F100BEANA#W0, R5F100BFANA#W0, R5F100BGANA#W0
			D	R5F100BADNA#U0, R5F100BCDNA#U0, R5F100BDDNA#U0, R5F100BEDNA#U0, R5F100BFDNA#U0, R5F100BGDNA#U0 R5F100BADNA#W0, R5F100BCDNA#W0, R5F100BDDNA#W0, R5F100BEDNA#W0, R5F100BFDNA#W0, R5F100BGDNA#W0
			G	R5F100BAGNA#U0, R5F100BCGNA#U0, R5F100BDGNA#U0, R5F100BEGNA#U0, R5F100BFGNA#U0, R5F100BGGNA#U0 R5F100BAGNA#W0, R5F100BCGNA#W0, R5F100BDGNA#W0, R5F100BEGNA#W0, R5F100BFGNA#W0, R5F100BGGNA#W0
		Not mounted	A	R5F101BAANA#U0, R5F101BCANA#U0, R5F101BDANA#U0, R5F101BEANA#U0, R5F101BFANA#U0, R5F101BGANA#U0 R5F101BAANA#W0, R5F101BCANA#W0, R5F101BDANA#W0, R5F101BEANA#W0, R5F101BFANA#W0, R5F101BGANA#W0
			D	R5F101BADNA#U0, R5F101BCDNA#U0, R5F101BDDNA#U0, R5F101BEDNA#U0, R5F101BFDNA#U0, R5F101BGDNA#U0 R5F101BADNA#W0, R5F101BCDNA#W0, R5F101BDDNA#W0, R5F101BEDNA#W0, R5F101BFDNA#W0, R5F101BGDNA#W0

Note For the fields of application, refer to **Figure 1-1 Part Number, Memory Size, and Package of RL78/G13**.

Caution The ordering part numbers represent the numbers at the time of publication. For the latest ordering part numbers, refer to the target product page of the Renesas Electronics website.

Table 1-1. List of Ordering Part Numbers

(3/12)

Pin count	Package	Data flash	Fields of Application Note	Ordering Part Number
36 pins	36-pin plastic WFLGA (4 × 4 mm, 0.5 mm pitch)	Mounted	A	R5F100CAALA#U0, R5F100CCALA#U0, R5F100CDALA#U0, R5F100CEALA#U0, R5F100CFALA#U0, R5F100CGALA#U0 R5F100CAALA#W0, R5F100CCALA#W0, R5F100CDALA#W0, R5F100CEALA#W0, R5F100CFALA#W0, R5F100CGALA#W0
			G	R5F100CAGLA#U0, R5F100CCGLA#U0, R5F100CDGLA#U0, R5F100CEGLA#U0, R5F100CFGLA#U0, R5F100CGGLA#U0 R5F100CAGLA#W0, R5F100CCGLA#W0, R5F100CDGLA#W0, R5F100CEGLA#W0, R5F100CFGLA#W0, R5F100CGGLA#W0
		Not mounted	A	R5F101CAALA#U0, R5F101CCALA#U0, R5F101CDALA#U0, R5F101CEALA#U0, R5F101CFALA#U0, R5F101CGALA#U0 R5F101CAALA#W0, R5F101CCALA#W0, R5F101CDALA#W0, R5F101CEALA#W0, R5F101CFALA#W0, R5F101CGALA#W0
40 pins	40-pin plastic HWQFN (6 × 6 mm, 0.5 mm pitch)	Mounted	A	R5F100EAANA#U0, R5F100ECANA#U0, R5F100EDANA#U0, R5F100EEANA#U0, R5F100EFANA#U0, R5F100EGANA#U0, R5F100EHANA#U0 R5F100EAANA#W0, R5F100ECANA#W0, R5F100EDANA#W0, R5F100EEANA#W0, R5F100EFANA#W0, R5F100EGANA#W0, R5F100EHANA#W0
			D	R5F100EADNA#U0, R5F100ECDNA#U0, R5F100EDDNA#U0, R5F100EEDNA#U0, R5F100EFDNA#U0, R5F100EGDNA#U0, R5F100EHDNA#U0 R5F100EADNA#W0, R5F100ECDNA#W0, R5F100EDDNA#W0, R5F100EEDNA#W0, R5F100EFDNA#W0, R5F100EGDNA#W0, R5F100EHDNA#W0
			G	R5F100EAGNA#U0, R5F100ECGNA#U0, R5F100EDGNA#U0, R5F100EEGNA#U0, R5F100EFGNA#U0, R5F100EGGNA#U0, R5F100EHGNA#U0 R5F100EAGNA#W0, R5F100ECGNA#W0, R5F100EDGNA#W0, R5F100EEGNA#W0, R5F100EFGNA#W0, R5F100EGGNA#W0, R5F100EHGNA#W0
		Not mounted	A	R5F101EAANA#U0, R5F101ECANA#U0, R5F101EDANA#U0, R5F101EEANA#U0, R5F101EFANA#U0, R5F101EGANA#U0, R5F101EHANA#U0 R5F101EAANA#W0, R5F101ECANA#W0, R5F101EDANA#W0, R5F101EEANA#W0, R5F101EFANA#W0, R5F101EGANA#W0, R5F101EHANA#W0
			D	R5F101EADNA#U0, R5F101ECDNA#U0, R5F101EDDNA#U0, R5F101EEDNA#U0, R5F101EFDNA#U0, R5F101EGDNA#U0, R5F101EHDNA#U0 R5F101EADNA#W0, R5F101ECDNA#W0, R5F101EDDNA#W0, R5F101EEDNA#W0, R5F101EFDNA#W0, R5F101EGDNA#W0, R5F101EHDNA#W0

Note For the fields of application, refer to **Figure 1-1 Part Number, Memory Size, and Package of RL78/G13**.

Caution The ordering part numbers represent the numbers at the time of publication. For the latest ordering part numbers, refer to the target product page of the Renesas Electronics website.

Table 1-1. List of Ordering Part Numbers

(4/12)

Pin count	Package	Data flash	Fields of Application Note	Ordering Part Number
44 pins	44-pin plastic LQFP (10 × 10 mm, 0.8 mm pitch)	Mounted	A	R5F100FAAFP#V0, R5F100FCAFP#V0, R5F100FDAFP#V0, R5F100FEAFP#V0, R5F100FFAFP#V0, R5F100FGAFP#V0, R5F100FHAFP#V0, R5F100FJAFP#V0, R5F100FKAFP#V0, R5F100FLAFP#V0 R5F100FAAFP#X0, R5F100FCAFP#X0, R5F100FDAFP#X0, R5F100FEAFP#X0, R5F100FFAFP#X0, R5F100FGAFP#X0, R5F100FHAFP#X0, R5F100FJAFP#X0, R5F100FKAFP#X0, R5F100FLAFP#X0
			D	R5F100FADFP#V0, R5F100FCDFP#V0, R5F100FDDFP#V0, R5F100FEDFP#V0, R5F100FFDFP#V0, R5F100FGDFP#V0, R5F100FHDFP#V0, R5F100FJDFP#V0, R5F100FKDFP#V0, R5F100FLDFP#V0 R5F100FADFP#X0, R5F100FCDFP#X0, R5F100FDDFP#X0, R5F100FEDFP#X0, R5F100FFDFP#X0, R5F100FGDFP#X0, R5F100FHDFP#X0, R5F100FJDFP#X0, R5F100FKDFP#X0, R5F100FLDFP#X0
			G	R5F100FAGFP#V0, R5F100FCGFP#V0, R5F100FDGFP#V0, R5F100FEGFP#V0, R5F100FFGFP#V0, R5F100FGGFP#V0, R5F100FHGFP#V0, R5F100FJGFP#V0 R5F100FAGFP#X0, R5F100FCGFP#X0, R5F100FDGFP#X0, R5F100FEGFP#X0, R5F100FFGFP#X0, R5F100FGGFP#X0, R5F100FHGFP#X0, R5F100FJGFP#X0
		Not mounted	A	R5F101FAAFP#V0, R5F101FCAFP#V0, R5F101FDAFP#V0, R5F101FEAFP#V0, R5F101FFAFP#V0, R5F101FGAFP#V0, R5F101FHAFP#V0, R5F101FJAFP#V0, R5F101FKAFP#V0, R5F101FLAFP#V0 R5F101FAAFP#X0, R5F101FCAFP#X0, R5F101FDAFP#X0, R5F101FEAFP#X0, R5F101FFAFP#X0, R5F101FGAFP#X0, R5F101FHAFP#X0, R5F101FJAFP#X0, R5F101FKAFP#X0, R5F101FLAFP#X0
			D	R5F101FADFP#V0, R5F101FCDFP#V0, R5F101FDDFP#V0, R5F101FEDFP#V0, R5F101FFDFP#V0, R5F101FGDFP#V0, R5F101FHDFP#V0, R5F101FJDFP#V0, R5F101FKDFP#V0, R5F101FLDFP#V0 R5F101FADFP#X0, R5F101FCDFP#X0, R5F101FDDFP#X0, R5F101FEDFP#X0, R5F101FFDFP#X0, R5F101FGDFP#X0, R5F101FHDFP#X0, R5F101FJDFP#X0, R5F101FKDFP#X0, R5F101FLDFP#X0

Note For the fields of application, refer to **Figure 1-1 Part Number, Memory Size, and Package of RL78/G13**.

Caution The ordering part numbers represent the numbers at the time of publication. For the latest ordering part numbers, refer to the target product page of the Renesas Electronics website.

Table 1-1. List of Ordering Part Numbers

(5/12)

Pin count	Package	Data flash	Fields of Application Note	Ordering Part Number
48 pins	48-pin plastic LFQFP (7 × 7 mm, 0.5 mm pitch)	Mounted	A	R5F100GAAFB#V0, R5F100GCAFB#V0, R5F100GDAFB#V0, R5F100GEAFB#V0, R5F100GFAFB#V0, R5F100GGAFB#V0, R5F100GHAFB#V0, R5F100GJAFB#V0, R5F100GKAFB#V0, R5F100GLAFB#V0 R5F100GAAFB#X0, R5F100GCAFB#X0, R5F100GDAFB#X0, R5F100GEAFB#X0, R5F100GFAFB#X0, R5F100GGAFB#X0, R5F100GHAFB#X0, R5F100GJAFB#X0, R5F100GKAFB#X0, R5F100GLAFB#X0
			D	R5F100GADFB#V0, R5F100GCDFB#V0, R5F100GDDFB#V0, R5F100GEDFB#V0, R5F100GFDFB#V0, R5F100GGDFB#V0, R5F100GHDFB#V0, R5F100GJDFB#V0, R5F100GKDFB#V0, R5F100GLDFB#V0 R5F100GADFB#X0, R5F100GCDFB#X0, R5F100GDDFB#X0, R5F100GEDFB#X0, R5F100GFDFB#X0, R5F100GGDFB#X0, R5F100GHDFB#X0, R5F100GJDFB#X0, R5F100GKDFB#X0, R5F100GLDFB#X0
			G	R5F100GAGFB#V0, R5F100GCGFB#V0, R5F100GDGFB#V0, R5F100GEGFB#V0, R5F100GFGFB#V0, R5F100GGGFB#V0, R5F100GHGFB#V0, R5F100GJGFB#V0 R5F100GAGFB#X0, R5F100GCGFB#X0, R5F100GDGFB#X0, R5F100GEGFB#X0, R5F100GFGFB#X0, R5F100GGGFB#X0, R5F100GHGFB#X0, R5F100GJGFB#X0
		Not mounted	A	R5F101GAAFB#V0, R5F101GCAFB#V0, R5F101GDAFB#V0, R5F101GEAFB#V0, R5F101GFAFB#V0, R5F101GGAFB#V0, R5F101GHAFB#V0, R5F101GJAFB#V0, R5F101GKAFB#V0, R5F101GLAFB#V0 R5F101GAAFB#X0, R5F101GCAFB#X0, R5F101GDAFB#X0, R5F101GEAFB#X0, R5F101GFAFB#X0, R5F101GGAFB#X0, R5F101GHAFB#X0, R5F101GJAFB#X0, R5F101GKAFB#X0, R5F101GLAFB#X0
			D	R5F101GADFB#V0, R5F101GCDFB#V0, R5F101GDDFB#V0, R5F101GEDFB#V0, R5F101GFDFB#V0, R5F101GGDFB#V0, R5F101GHDFB#V0, R5F101GJDFB#V0, R5F101GKDFB#V0, R5F101GLDFB#V0 R5F101GADFB#X0, R5F101GCDFB#X0, R5F101GDDFB#X0, R5F101GEDFB#X0, R5F101GFDFB#X0, R5F101GGDFB#X0, R5F101GHDFB#X0, R5F101GJDFB#X0, R5F101GKDFB#X0, R5F101GLDFB#X0

Note For the fields of application, refer to **Figure 1-1 Part Number, Memory Size, and Package of RL78/G13**.

Caution The ordering part numbers represent the numbers at the time of publication. For the latest ordering part numbers, refer to the target product page of the Renesas Electronics website.

Table 1-1. List of Ordering Part Numbers

(6/12)

Pin count	Package	Data flash	Fields of Application Note	Ordering Part Number
48 pins	48-pin plastic HWQFN (7 × 7 mm, 0.5 mm pitch)	Mounted	A	R5F100GAANA#U0, R5F100GCANA#U0, R5F100GDANA#U0, R5F100GEANA#U0, R5F100GFANA#U0, R5F100GGANA#U0, R5F100GHANA#U0, R5F100GJANA#U0, R5F100GKANA#U0, R5F100GLANA#U0 R5F100GAANA#W0, R5F100GCANA#W0, R5F100GDANA#W0, R5F100GEANA#W0, R5F100GFANA#W0, R5F100GGANA#W0, R5F100GHANA#W0, R5F100GJANA#W0, R5F100GKANA#W0, R5F100GLANA#W0
			D	R5F100GADNA#U0, R5F100GCDNA#U0, R5F100GDDNA#U0, R5F100GEDNA#U0, R5F100GFDNA#U0, R5F100GGDNA#U0, R5F100GHDNA#U0, R5F100GJDNA#U0, R5F100GKDNA#U0, R5F100GLDNA#U0 R5F100GADNA#W0, R5F100GCDNA#W0, R5F100GDDNA#W0, R5F100GEDNA#W0, R5F100GFDNA#W0, R5F100GGDNA#W0, R5F100GHDNA#W0, R5F100GJDNA#W0, R5F100GKDNA#W0, R5F100GLDNA#W0
			G	R5F100GAGNA#U0, R5F100GCGNA#U0, R5F100GDGNA#U0, R5F100GEGNA#U0, R5F100GFGNA#U0, R5F100GGGNA#U0, R5F100GHGNA#U0, R5F100GJGNA#U0 R5F100GAGNA#W0, R5F100GCGNA#W0, R5F100GDGNA#W0, R5F100GEGNA#W0, R5F100GFGNA#W0, R5F100GGGNA#W0, R5F100GHGNA#W0, R5F100GJGNA#W0
		Not mounted	A	R5F101GAANA#U0, R5F101GCANA#U0, R5F101GDANA#U0, R5F101GEANA#U0, R5F101GFANA#U0, R5F101GGANA#U0, R5F101GHANA#U0, R5F101GJANA#U0, R5F101GKANA#U0, R5F101GLANA#U0 R5F101GAANA#W0, R5F101GCANA#W0, R5F101GDANA#W0, R5F101GEANA#W0, R5F101GFANA#W0, R5F101GGANA#W0, R5F101GHANA#W0, R5F101GJANA#W0, R5F101GKANA#W0, R5F101GLANA#W0
			D	R5F101GADNA#U0, R5F101GCDNA#U0, R5F101GDDNA#U0, R5F101GEDNA#U0, R5F101GFDNA#U0, R5F101GGDNA#U0, R5F101GHDNA#U0, R5F101GJDNA#U0, R5F101GKDNA#U0, R5F101GLDNA#U0 R5F101GADNA#W0, R5F101GCDNA#W0, R5F101GDDNA#W0, R5F101GEDNA#W0, R5F101GFDNA#W0, R5F101GGDNA#W0, R5F101GHDNA#W0, R5F101GJDNA#W0, R5F101GKDNA#W0, R5F101GLDNA#W0

Note For the fields of application, refer to **Figure 1-1 Part Number, Memory Size, and Package of RL78/G13**.

Caution The ordering part numbers represent the numbers at the time of publication. For the latest ordering part numbers, refer to the target product page of the Renesas Electronics website.

Table 1-1. List of Ordering Part Numbers

(7/12)

Pin count	Package	Data flash	Fields of Application Note	Ordering Part Number
52 pins	52-pin plastic LQFP (10 × 10 mm, 0.65 mm pitch)	Mounted	A	R5F100JCAFA#V0, R5F100JDAFA#V0, R5F100JEAFA#V0, R5F100JFAFA#V0, R5F100JGAFA#V0, R5F100JHAFA#V0, R5F100JJAFA#V0, R5F100JKAFA#V0, R5F100JLAFA#V0 R5F100JCAFA#X0, R5F100JDAFA#X0, R5F100JEAFA#X0, R5F100JFAFA#X0, R5F100JGAFA#X0, R5F100JHAFA#X0, R5F100JJAFA#X0, R5F100JKAFA#X0, R5F100JLAFA#X0
			D	R5F100JCDFA#V0, R5F100JDDFA#V0, R5F100JEDFA#V0, R5F100JFDFA#V0, R5F100JGDFA#V0, R5F100JHDFA#V0, R5F100JJDFA#V0, R5F100JKDFA#V0, R5F100JLDFA#V0 R5F100JCDFA#X0, R5F100JDDFA#X0, R5F100JEDFA#X0, R5F100JFDFA#X0, R5F100JGDFA#X0, R5F100JHDFA#X0, R5F100JJDFA#X0, R5F100JKDFA#X0, R5F100JLDFA#X0
			G	R5F100JCGFA#V0, R5F100JDGFA#V0, R5F100JEGFA#V0, R5F100JFGFA#V0,R5F100JGGFA#V0, R5F100JHGFA#V0, R5F100JJGFA#V0 R5F100JCGFA#X0, R5F100JDGFA#X0, R5F100JEGFA#X0, R5F100JFGFA#X0,R5F100JGGFA#X0, R5F100JHGFA#X0, R5F100JJGFA#X0
		Not mounted	A	R5F101JCAFA#V0, R5F101JDAFA#V0, R5F101JEAFA#V0, R5F101JFAFA#V0, R5F101JGAFA#V0, R5F101JHAFA#V0, R5F101JJAFA#V0, R5F101JKAFA#V0, R5F101JLAFA#V0 R5F101JCAFA#X0, R5F101JDAFA#X0, R5F101JEAFA#X0, R5F101JFAFA#X0, R5F101JGAFA#X0, R5F101JHAFA#X0, R5F101JJAFA#X0, R5F101JKAFA#X0, R5F101JLAFA#X0
			D	R5F101JCDFA#V0, R5F101JDDFA#V0, R5F101JEDFA#V0, R5F101JFDFA#V0, R5F101JGDFA#V0, R5F101JHDFA#V0, R5F101JJDFA#V0, R5F101JKDFA#V0, R5F101JLDFA#V0 R5F101JCDFA#X0, R5F101JDDFA#X0, R5F101JEDFA#X0, R5F101JFDFA#X0, R5F101JGDFA#X0, R5F101JHDFA#X0, R5F101JJDFA#X0, R5F101JKDFA#X0, R5F101JLDFA#X0

Note For the fields of application, refer to **Figure 1-1 Part Number, Memory Size, and Package of RL78/G13**.

Caution The ordering part numbers represent the numbers at the time of publication. For the latest ordering part numbers, refer to the target product page of the Renesas Electronics website.

Table 1-1. List of Ordering Part Numbers

(8/12)

Pin count	Package	Data flash	Fields of Application [Note]	Ordering Part Number
64 pins	64-pin plastic LQFP (12 × 12 mm, 0.65 mm pitch)	Mounted	A	R5F100LCAFA#V0, R5F100LDAFA#V0, R5F100LEAFA#V0, R5F100LFAFA#V0, R5F100LGAFA#V0, R5F100LHAFA#V0, R5F100LJAFA#V0, R5F100LKAFA#V0, R5F100LLAFA#V0 R5F100LCAFA#X0, R5F100LDAFA#X0, R5F100LEAFA#X0, R5F100LFAFA#X0,
			D	R5F100LGAFA#X0, R5F100LHAFA#X0, R5F100LJAFA#X0, R5F100LKAFA#X0, R5F100LLAFA#X0 R5F100LCDFA#V0, R5F100LDDFA#V0, R5F100LEDFA#V0, R5F100LFDFA#V0, R5F100LGDFA#V0, R5F100LHDFA#V0, R5F100LJDFA#V0, R5F100LKDFA#V0, R5F100LLDFA#V0
			G	R5F100LCDFA#X0, R5F100LDDFA#X0, R5F100LEDFA#X0, R5F100LFDFA#X0, R5F100LGDFA#X0, R5F100LHDFA#X0, R5F100LJDFA#X0, R5F100LKDFA#X0, R5F100LLDFA#X0 R5F100LCGFA#V0, R5F100LDGFA#V0, R5F100LEGFA#V0, R5F100LFGFA#V0 R5F100LCGFA#X0, R5F100LDGFA#X0, R5F100LEGFA#X0, R5F100LFGFA#X0 R5F100LGGFA#V0, R5F100LHGFA#V0, R5F100LJGFA#V0 R5F100LGGFA#X0, R5F100LHGFA#X0, R5F100LJGFA#X0
		Not mounted	A	R5F101LCAFA#V0, R5F101LDAFA#V0, R5F101LEAFA#V0, R5F101LFAFA#V0, R5F101LGAFA#V0, R5F101LHAFA#V0, R5F101LJAFA#V0, R5F101LKAFA#V0, R5F101LLAFA#V0 R5F101LCAFA#X0, R5F101LDAFA#X0, R5F101LEAFA#X0, R5F101LFAFA#X0,
			D	R5F101LGAFA#X0, R5F101LHAFA#X0, R5F101LJAFA#X0, R5F101LKAFA#X0, R5F101LLAFA#X0 R5F101LCDFA#V0, R5F101LDDFA#V0, R5F101LEDFA#V0, R5F101LFDFA#V0, R5F101LGDFA#V0, R5F101LHDFA#V0, R5F101LJDFA#V0, R5F101LKDFA#V0, R5F101LLDFA#V0 R5F101LCDFA#X0, R5F101LDDFA#X0, R5F101LEDFA#X0, R5F101LFDFA#X0, R5F101LGDFA#X0, R5F101LHDFA#X0, R5F101LJDFA#X0, R5F101LKDFA#X0, R5F101LLDFA#X0

Note For the fields of application, refer to **Figure 1-1 Part Number, Memory Size, and Package of RL78/G13**.

Caution The ordering part numbers represent the numbers at the time of publication. For the latest ordering part numbers, refer to the target product page of the Renesas Electronics website.

Table 1-1. List of Ordering Part Numbers

(9/12)

Pin count	Package	Data flash	Fields of Application Note	Ordering Part Number
64 pins	64-pin plastic LFQFP (10 × 10 mm, 0.5 mm pitch)	Mounted	A	R5F100LCAFB#V0, R5F100LDAFB#V0, R5F100LEAFB#V0, R5F100LFAFB#V0, R5F100LGAFB#V0, R5F100LHAFB#V0, R5F100LJAFB#V0, R5F100LKAFB#V0, R5F100LLAFB#V0 R5F100LCAFB#X0, R5F100LDAFB#X0, R5F100LEAFB#X0, R5F100LFAFB#X0, R5F100LGAFB#X0, R5F100LHAFB#X0, R5F100LJAFB#X0, R5F100LKAFB#X0, R5F100LLAFB#X0
			D	R5F100LCDFB#V0, R5F100LDDFB#V0, R5F100LEDFB#V0, R5F100LFDFB#V0, R5F100LGDFB#V0, R5F100LHDFB#V0, R5F100LJDFB#V0, R5F100LKDFB#V0, R5F100LLDFB#V0 R5F100LCDFB#X0, R5F100LDDFB#X0, R5F100LEDFB#X0, R5F100LFDFB#X0, R5F100LGDFB#X0, R5F100LHDFB#X0, R5F100LJDFB#X0, R5F100LKDFB#X0, R5F100LLDFB#X0
			G	R5F100LCGFB#V0, R5F100LDGFB#V0, R5F100LEGFB#V0, R5F100LFGFB#V0 R5F100LCGFB#X0, R5F100LDGFB#X0, R5F100LEGFB#X0, R5F100LFGFB#X0 R5F100LGGFB#V0, R5F100LHGFB#V0, R5F100LJGFB#V0 R5F100LGGFB#X0, R5F100LHGFB#X0, R5F100LJGFB#X0
		Not mounted	A	R5F101LCAFB#V0, R5F101LDAFB#V0, R5F101LEAFB#V0, R5F101LFAFB#V0, R5F101LGAFB#V0, R5F101LHAFB#V0, R5F101LJAFB#V0, R5F101LKAFB#V0, R5F101LLAFB#V0 R5F101LCAFB#X0, R5F101LDAFB#X0, R5F101LEAFB#X0, R5F101LFAFB#X0, R5F101LGAFB#X0, R5F101LHAFB#X0, R5F101LJAFB#X0, R5F101LKAFB#X0, R5F101LLAFB#X0
			D	R5F101LCDFB#V0, R5F101LDDFB#V0, R5F101LEDFB#V0, R5F101LFDFB#V0, R5F101LGDFB#V0, R5F101LHDFB#V0, R5F101LJDFB#V0, R5F101LKDFB#V0, R5F101LLDFB#V0 R5F101LCDFB#X0, R5F101LDDFB#X0, R5F101LEDFB#X0, R5F101LFDFB#X0, R5F101LGDFB#X0, R5F101LHDFB#X0, R5F101LJDFB#X0, R5F101LKDFB#X0, R5F101LLDFB#X0
	64-pin plastic VFBGA (4 × 4 mm, 0.4 mm pitch)	Mounted	A	R5F100LCABG#U0, R5F100LDABG#U0, R5F100LEABG#U0, R5F100LFABG#U0, R5F100LGABG#U0, R5F100LHABG#U0, R5F100LJABG#U0 R5F100LCABG#W0, R5F100LDABG#W0, R5F100LEABG#W0, R5F100LFABG#W0, R5F100LGABG#W0, R5F100LHABG#W0, R5F100LJABG#W0
			G	R5F100LCGBG#U0, R5F100LDGBG#U0, R5F100LEGBG#U0, R5F100LFGBG#U0, R5F100LGGBG#U0, R5F100LHGBG#U0, R5F100LJGBG#U0 R5F100LCGBG#W0, R5F100LDGBG#W0, R5F100LEGBG#W0, R5F100LFGBG#W0, R5F100LGGBG#W0, R5F100LHGBG#W0, R5F100LJGBG#W0
		Not mounted	A	R5F101LCABG#U0, R5F101LDABG#U0, R5F101LEABG#U0, R5F101LFABG#U0, R5F101LGABG#U0, R5F101LHABG#U0, R5F101LJABG#U0 R5F101LCABG#W0, R5F101LDABG#W0, R5F101LEABG#W0, R5F101LFABG#W0, R5F101LGABG#W0, R5F101LHABG#W0, R5F101LJABG#W0

Note For the fields of application, refer to **Figure 1-1 Part Number, Memory Size, and Package of RL78/G13**.

Caution The ordering part numbers represent the numbers at the time of publication. For the latest ordering part numbers, refer to the target product page of the Renesas Electronics website.

Table 1-1. List of Ordering Part Numbers

(10/12)

Pin count	Package	Data flash	Fields of Application Note	Ordering Part Number
80 pins	80-pin plastic LQFP (14 × 14 mm, 0.65 mm pitch)	Mounted	A	R5F100MFAFA#V0, R5F100MGAFA#V0, R5F100MHAFA#V0, R5F100MJAFA#V0, R5F100MKAFA#V0, R5F100MLAFA#V0 R5F100MFAFA#X0, R5F100MGAFA#X0, R5F100MHAFA#X0, R5F100MJAFA#X0, R5F100MKAFA#X0, R5F100MLAFA#X0
			D	R5F100MFDFA#V0, R5F100MGDFA#V0, R5F100MHDFA#V0, R5F100MJDFA#V0, R5F100MKDFA#V0, R5F100MLDFA#V0 R5F100MFDFA#X0, R5F100MGDFA#X0, R5F100MHDFA#X0, R5F100MJDFA#X0, R5F100MKDFA#X0, R5F100MLDFA#X0
			G	R5F100MFGFA#V0, R5F100MGGFA#V0, R5F100MHGFA#V0, R5F100MJGFA#V0 R5F100MFGFA#X0, R5F100MGGFA#X0, R5F100MHGFA#X0, R5F100MJGFA#X0
		Not mounted	A	R5F101MFAFA#V0, R5F101MGAFA#V0, R5F101MHAFA#V0, R5F101MJAFA#V0, R5F101MKAFA#V0, R5F101MLAFA#V0 R5F101MFAFA#X0, R5F101MGAFA#X0, R5F101MHAFA#X0, R5F101MJAFA#X0, R5F101MKAFA#X0, R5F101MLAFA#X0
			D	R5F101MFDFA#V0, R5F101MGDFA#V0, R5F101MHDFA#V0, R5F101MJDFA#V0, R5F101MKDFA#V0, R5F101MLDFA#V0 R5F101MFDFA#X0, R5F101MGDFA#X0, R5F101MHDFA#X0, R5F101MJDFA#X0, R5F101MKDFA#X0, R5F101MLDFA#X0
	80-pin plastic LFQFP (12 × 12 mm, 0.5 mm pitch)	Mounted	A	R5F100MFAFB#V0, R5F100MGAFB#V0, R5F100MHAFB#V0, R5F100MJAFB#V0, R5F100MKAFB#V0, R5F100MLAFB#V0 R5F100MFAFB#X0, R5F100MGAFB#X0, R5F100MHAFB#X0, R5F100MJAFB#X0, R5F100MKAFB#X0, R5F100MLAFB#X0
			D	R5F100MFDFB#V0, R5F100MGDFB#V0, R5F100MHDFB#V0, R5F100MJDFB#V0, R5F100MKDFB#V0, R5F100MLDFB#V0 R5F100MFDFB#X0, R5F100MGDFB#X0, R5F100MHDFB#X0, R5F100MJDFB#X0, R5F100MKDFB#X0, R5F100MLDFB#X0
			G	R5F100MFGFB#V0, R5F100MGGFB#V0, R5F100MHGFB#V0, R5F100MJGFB#V0 R5F100MFGFB#X0, R5F100MGGFB#X0, R5F100MHGFB#X0, R5F100MJGFB#X0
		Not mounted	A	R5F101MFAFB#V0, R5F101MGAFB#V0, R5F101MHAFB#V0, R5F101MJAFB#V0, R5F101MKAFB#V0, R5F101MLAFB#V0 R5F101MFAFB#X0, R5F101MGAFB#X0, R5F101MHAFB#X0, R5F101MJAFB#X0, R5F101MKAFB#X0, R5F101MLAFB#X0
			D	R5F101MFDFB#V0, R5F101MGDFB#V0, R5F101MHDFB#V0, R5F101MJDFB#V0, R5F101MKDFB#V0, R5F101MLDFB#V0 R5F101MFDFB#X0, R5F101MGDFB#X0, R5F101MHDFB#X0, R5F101MJDFB#X0, R5F101MKDFB#X0, R5F101MLDFB#X0

Note For the fields of application, refer to **Figure 1-1 Part Number, Memory Size, and Package of RL78/G13**.

Caution The ordering part numbers represent the numbers at the time of publication. For the latest ordering part numbers, refer to the target product page of the Renesas Electronics website.

Table 1-1. List of Ordering Part Numbers

(11/12)

Pin count	Package	Data flash	Fields of Application Note	Ordering Part Number
100 pins	100-pin plastic LFQFP (14 × 14 mm, 0.5 mm pitch)	Mounted	A	R5F100PFAFB#V0, R5F100PGAFB#V0, R5F100PHAFB#V0, R5F100PJAFB#V0, R5F100PKAFB#V0, R5F100PLAFB#V0 R5F100PFAFB#X0, R5F100PGAFB#X0, R5F100PHAFB#X0, R5F100PJAFB#X0, R5F100PKAFB#X0, R5F100PLAFB#X0
			D	R5F100PFDFB#V0, R5F100PGDFB#V0, R5F100PHDFB#V0, R5F100PJDFB#V0, R5F100PKDFB#V0, R5F100PLDFB#V0 R5F100PFDFB#X0, R5F100PGDFB#X0, R5F100PHDFB#X0, R5F100PJDFB#X0, R5F100PKDFB#X0, R5F100PLDFB#X0
			G	R5F100PFGFB#V0, R5F100PGGFB#V0, R5F100PHGFB#V0, R5F100PJGFB#V0 R5F100PFGFB#X0, R5F100PGGFB#X0, R5F100PHGFB#X0, R5F100PJGFB#X0
		Not mounted	A	R5F101PFAFB#V0, R5F101PGAFB#V0, R5F101PHAFB#V0, R5F101PJAFB#V0, R5F101PKAFB#V0, R5F101PLAFB#V0 R5F101PFAFB#X0, R5F101PGAFB#X0, R5F101PHAFB#X0, R5F101PJAFB#X0, R5F101PKAFB#X0, R5F101PLAFB#X0
			D	R5F101PFDFB#V0, R5F101PGDFB#V0, R5F101PHDFB#V0, R5F101PJDFB#V0, R5F101PKDFB#V0, R5F101PLDFB#V0 R5F101PFDFB#X0, R5F101PGDFB#X0, R5F101PHDFB#X0, R5F101PJDFB#X0, R5F101PKDFB#X0, R5F101PLDFB#X0
	100-pin plastic LQFP (14 × 20 mm, 0.65 mm pitch)	Mounted	A	R5F100PFAFA#V0, R5F100PGAFA#V0, R5F100PHAFA#V0, R5F100PJAFA#V0, R5F100PKAFA#V0, R5F100PLAFA#V0 R5F100PFAFA#X0, R5F100PGAFA#X0, R5F100PHAFA#X0, R5F100PJAFA#X0, R5F100PKAFA#X0, R5F100PLAFA#X0
			D	R5F100PFDFA#V0, R5F100PGDFA#V0, R5F100PHDFA#V0, R5F100PJDFA#V0, R5F100PKDFA#V0, R5F100PLDFA#V0 R5F100PFDFA#X0, R5F100PGDFA#X0, R5F100PHDFA#X0, R5F100PJDFA#X0, R5F100PKDFA#X0, R5F100PLDFA#X0
			G	R5F100PFGFA#V0, R5F100PGGFA#V0, R5F100PHGFA#V0, R5F100PJGFA#V0 R5F100PFGFA#X0, R5F100PGGFA#X0, R5F100PHGFA#X0, R5F100PJGFA#X0
		Not mounted	A	R5F101PFAFA#V0, R5F101PGAFA#V0, R5F101PHAFA#V0, R5F101PJAFA#V0, R5F101PKAFA#V0, R5F101PLAFA#V0 R5F101PFAFA#X0, R5F101PGAFA#X0, R5F101PHAFA#X0, R5F101PJAFA#X0, R5F101PKAFA#X0, R5F101PLAFA#X0
			D	R5F101PFDFA#V0, R5F101PGDFA#V0, R5F101PHDFA#V0, R5F101PJDFA#V0, R5F101PKDFA#V0, R5F101PLDFA#V0 R5F101PFDFA#X0, R5F101PGDFA#X0, R5F101PHDFA#X0, R5F101PJDFA#X0, R5F101PKDFA#X0, R5F101PLDFA#X0

Note For the fields of application, refer to **Figure 1-1 Part Number, Memory Size, and Package of RL78/G13**.

Caution The ordering part numbers represent the numbers at the time of publication. For the latest ordering part numbers, refer to the target product page of the Renesas Electronics website.

Table 1-1. List of Ordering Part Numbers

(12/12)

Pin count	Package	Data flash	Fields of Application [Note]	Ordering Part Number
128 pins	128-pin plastic LFQFP (14 × 20 mm, 0.5 mm pitch)	Mounted	A	R5F100SHAFB#V0, R5F100SJAFB#V0, R5F100SKAFB#V0, R5F100SLAFB#V0 R5F100SHAFB#X0, R5F100SJAFB#X0, R5F100SKAFB#X0, R5F100SLAFB#X0
			D	R5F100SHDFB#V0, R5F100SJDFB#V0, R5F100SKDFB#V0, R5F100SLDFB#V0 R5F100SHDFB#X0, R5F100SJDFB#X0, R5F100SKDFB#X0, R5F100SLDFB#X0
		Not mounted	A	R5F101SHAFB#V0, R5F101SJAFB#V0, R5F101SKAFB#V0, R5F101SLAFB#V0 R5F101SHAFB#X0, R5F101SJAFB#X0, R5F101SKAFB#X0, R5F101SLAFB#X0
			D	R5F101SHDFB#V0, R5F101SJDFB#V0, R5F101SKDFB#V0, R5F101SLDFB#V0 R5F101SHDFB#X0, R5F101SJDFB#X0, R5F101SKDFB#X0, R5F101SLDFB#X0

Note For the fields of application, refer to **Figure 1-1 Part Number, Memory Size, and Package of RL78/G13**.

Caution The ordering part numbers represent the numbers at the time of publication. For the latest ordering part numbers, refer to the target product page of the Renesas Electronics website.

1.3 Pin Configuration (Top View)

1.3.1 20-pin products

- 20-pin plastic LSSOP (7.62 mm (300), 0.65 mm pitch)

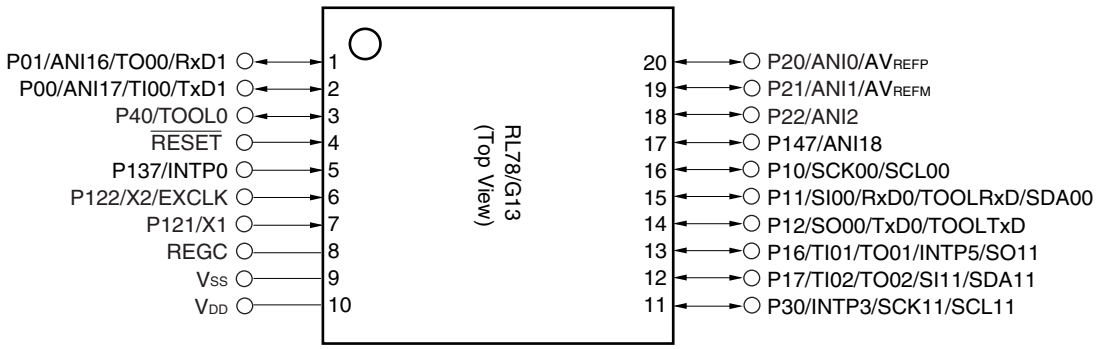

Caution Connect the REGC pin to Vss via a capacitor (0.47 to 1 μF).

Remark For pin identification, see **1.4 Pin Identification**.

1.3.2 24-pin products

- 24-pin plastic HWQFN (4 × 4 mm, 0.5 mm pitch)

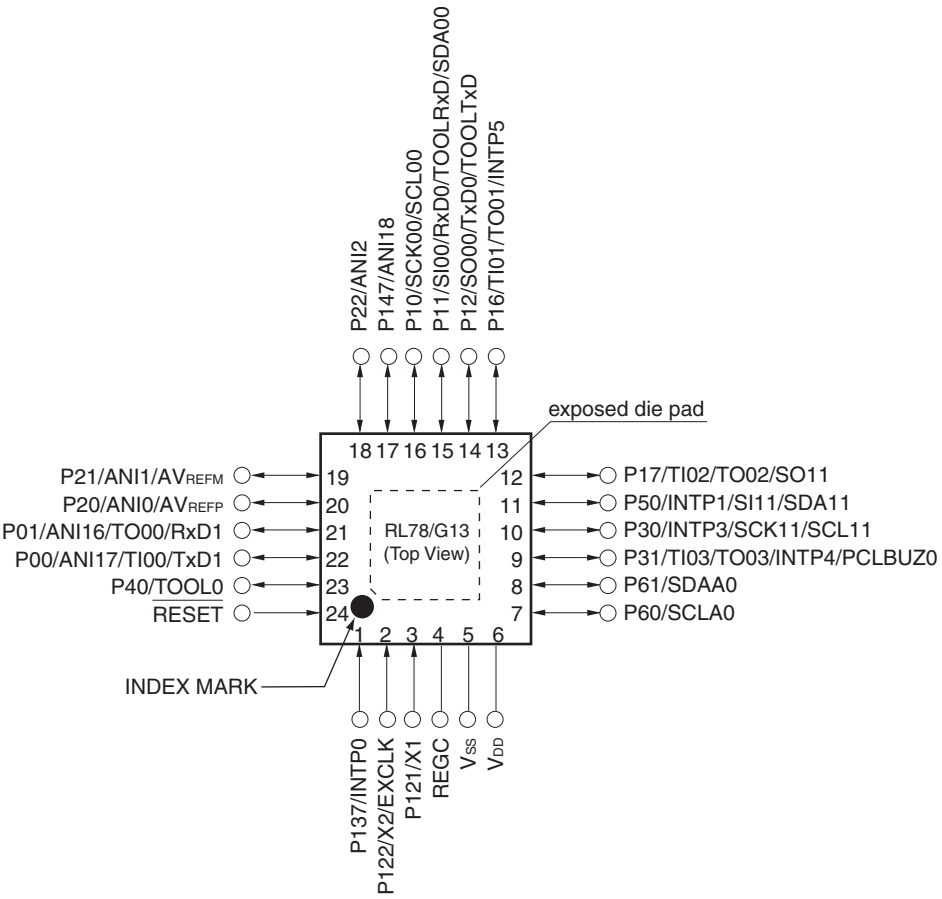

Caution Connect the REGC pin to Vss via a capacitor (0.47 to 1 μF).

Remarks 1. For pin identification, see **1.4 Pin Identification**.

2. It is recommended to connect an exposed die pad to V_{SS}.

1.3.3 25-pin products

- 25-pin plastic WFLGA (3 × 3 mm, 0.50 mm pitch)

<R>

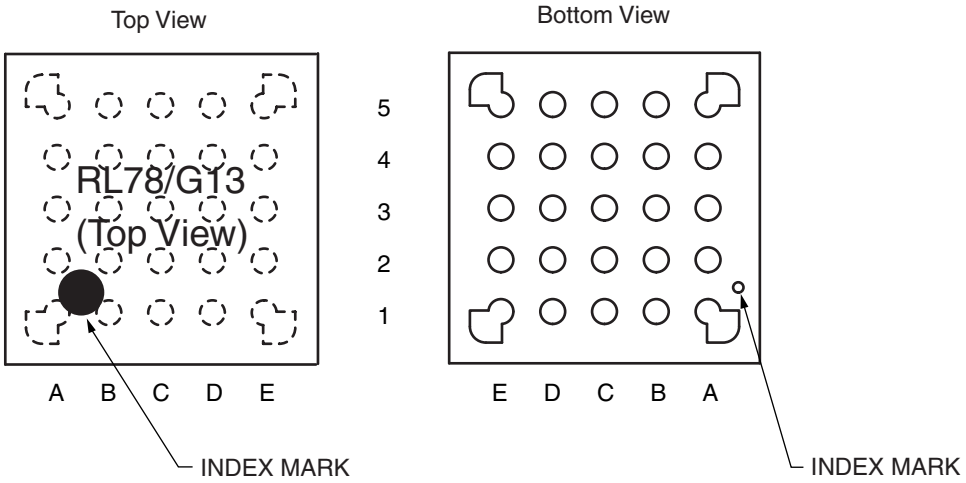

	A	B	C	D	E	
5	P40/TOOL0	$\overline{\text{RESET}}$	P01/ANI16/ TO00/RxD1	P22/ANI2	P147/ANI18	5
4	P122/X2/ EXCLK	P137/INTP0	P00/ANI17/ TI00/TxD1	P21/ANI1/ AV_{REFM}	P10/SCK00/ SCL00	4
3	P121/X1	V_{DD}	P20/ANI0/ AV_{REFP}	P12/SO00/ TxD0/ TOOLTxD	P11/SI00/ RxD0/ TOOLRxD/ SDA00	3
2	REGC	V_{SS}	P30/INTP3/ SCK11/SCL11	P17/TI02/ TO02/SO11	P50/INTP1/ SI11/SDA11	2
1	P60/SCLA0	P61/SDAA0	P31/TI03/ TO03/INTP4/ PCLBUZ0	P16/TI01/ TO01/INTP5	P130	1
	A	B	C	D	E	

Caution Connect the REGC pin to Vss via a capacitor (0.47 to 1 μF).

Remark For pin identification, see **1.4 Pin Identification**.

1.3.4 30-pin products

- 30-pin plastic LSSOP (7.62 mm (300), 0.65 mm pitch)

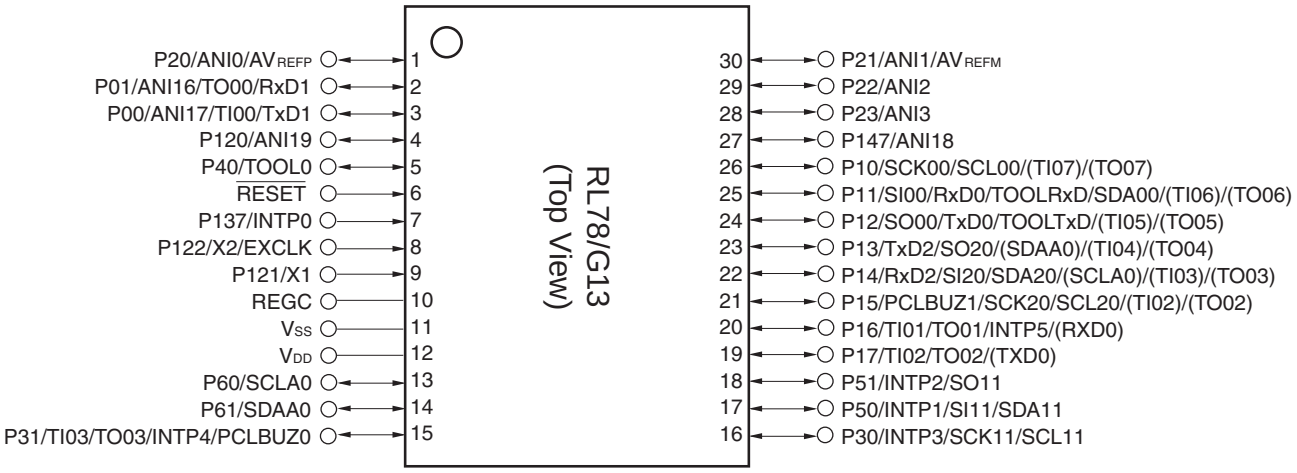

Caution Connect the REGC pin to Vss via a capacitor (0.47 to 1 μF).

Remarks 1. For pin identification, see **1.4 Pin Identification**.

2. Functions in parentheses in the above figure can be assigned via settings in the peripheral I/O redirection register (PIOR). Refer to **Figure 4-8 Format of Peripheral I/O Redirection Register (PIOR)** in the RL78/G13 User's Manual.

1.3.5 32-pin products

- 32-pin plastic HWQFN (5 × 5 mm, 0.5 mm pitch)

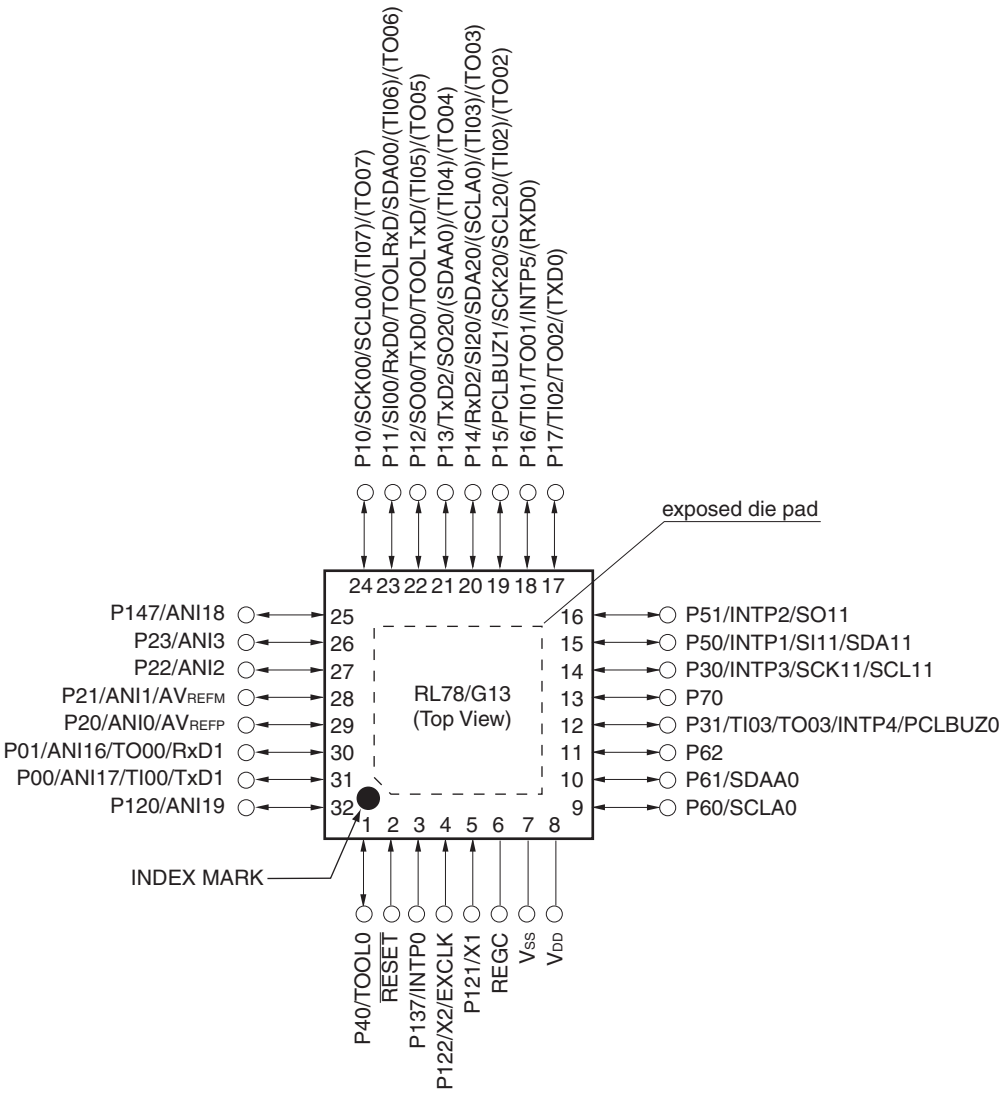

Caution Connect the REGC pin to Vss via a capacitor (0.47 to 1 μF).

Remarks 1. For pin identification, see **1.4 Pin Identification**.

2. Functions in parentheses in the above figure can be assigned via settings in the peripheral I/O redirection register (PIOR). Refer to **Figure 4-8 Format of Peripheral I/O Redirection Register (PIOR)** in the RL78/G13 User's Manual.

3. It is recommended to connect an exposed die pad to V_{SS}.

1.3.6 36-pin products

- 36-pin plastic WFLGA (4 × 4 mm, 0.5 mm pitch)

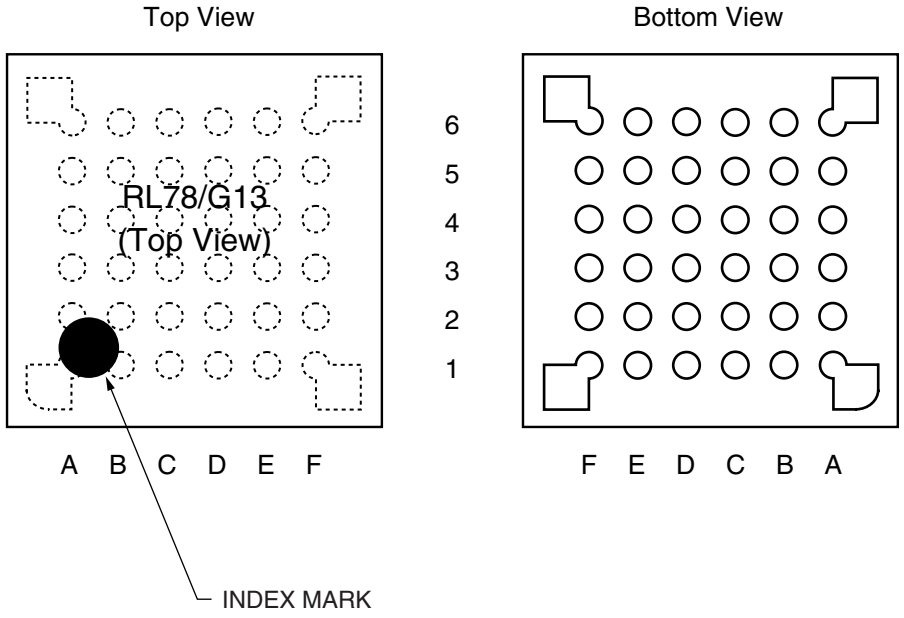

	A	B	C	D	E	F	
6	P60/SCLA0	V_{DD}	P121/X1	P122/X2/EXCLK	P137/INTP0	P40/TOOL0	6
5	P62	P61/SDAA0	V_{SS}	REGC	$\overline{\text{RESET}}$	P120/ANI19	5
4	P72/SO21	P71/SI21/ SDA21	P14/RxD2/SI20/ SDA20/(SCLA0) /(TI03)/(TO03)	P31/TI03/TO03/ INTP4/ PCLBUZ0	P00/TI00/TxD1	P01/TO00/RxD1	4
3	P50/INTP1/ SI11/SDA11	P70/SCK21/ SCL21	P15/PCLBUZ1/ SCK20/SCL20/ (TI02)/(TO02)	P22/ANI2	P20/ANI0/ AV_{REFP}	P21/ANI1/ AV_{REFM}	3
2	P30/INTP3/ SCK11/SCL11	P16/TI01/TO01/ INTP5/(RxD0)	P12/SO00/ TxD0/TOOLTxD /(TI05)/(TO05)	P11/SI00/RxD0/ TOOLRxD/ SDA00/(TI06)/ (TO06)	P24/ANI4	P23/ANI3	2
1	P51/INTP2/ SO11	P17/TI02/TO02/ (TxD0)	P13/TxD2/ SO20/(SDAA0)/ (TI04)/(TO04)	P10/SCK00/ SCL00/(TI07)/ (TO07)	P147/ANI18	P25/ANI5	1
	A	B	C	D	E	F	

Caution Connect the REGC pin to Vss via a capacitor (0.47 to 1 μF).

Remarks 1. For pin identification, see **1.4 Pin Identification**.

2. Functions in parentheses in the above figure can be assigned via settings in the peripheral I/O redirection register (PIOR). Refer to **Figure 4-8 Format of Peripheral I/O Redirection Register (PIOR)** in the RL78/G13 User's Manual.

1.3.7 40-pin products

- 40-pin plastic HWQFN (6 × 6 mm, 0.5 mm pitch)

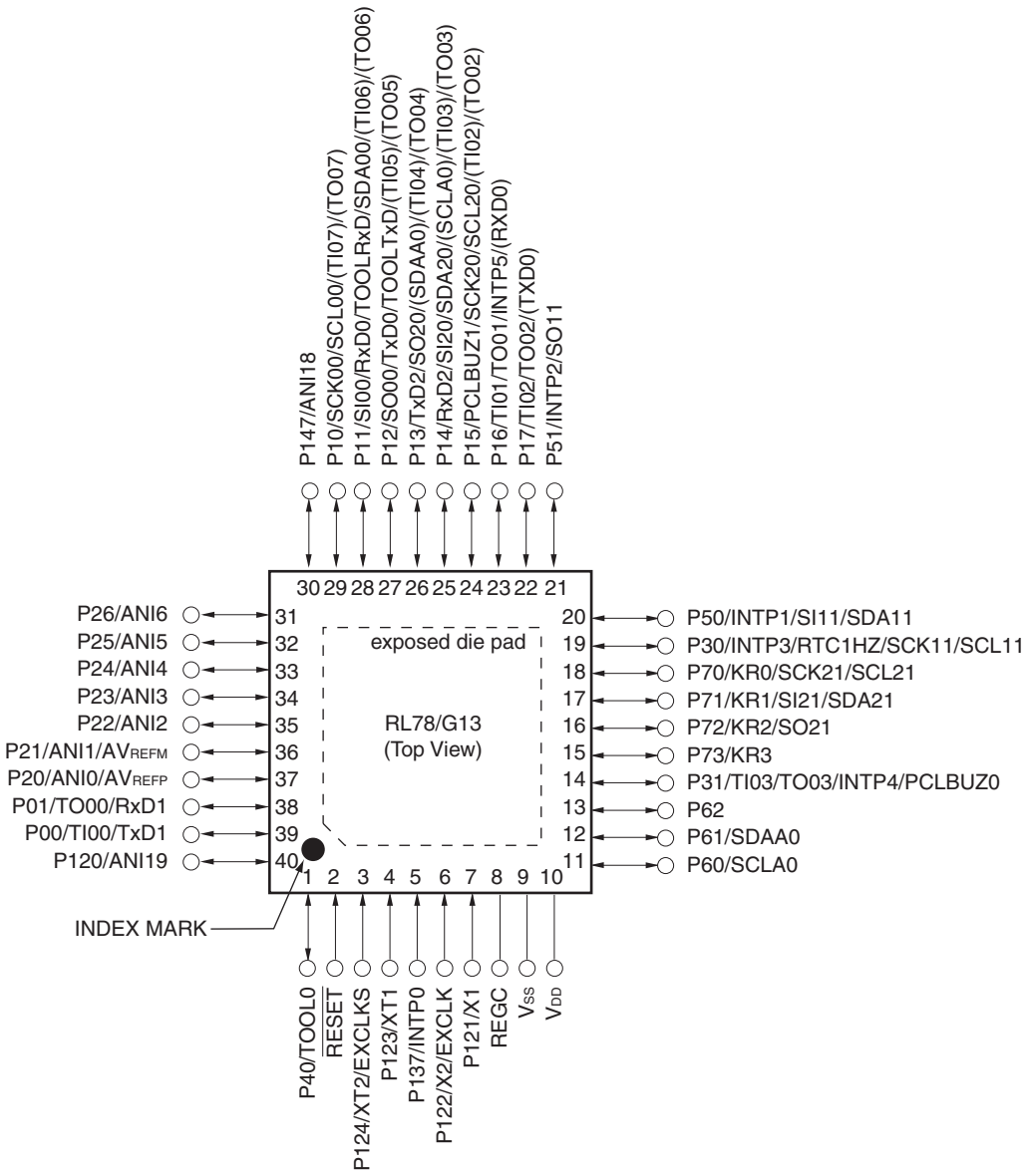

Caution Connect the REGC pin to Vss via a capacitor (0.47 to 1 μF).

Remarks 1. For pin identification, see **1.4 Pin Identification**.

2. Functions in parentheses in the above figure can be assigned via settings in the peripheral I/O redirection register (PIOR). Refer to **Figure 4-8 Format of Peripheral I/O Redirection Register (PIOR)** in the RL78/G13 User's Manual.

3. It is recommended to connect an exposed die pad to V_{SS}.

1.3.8 44-pin products

- 44-pin plastic LQFP (10 × 10 mm, 0.8 mm pitch)

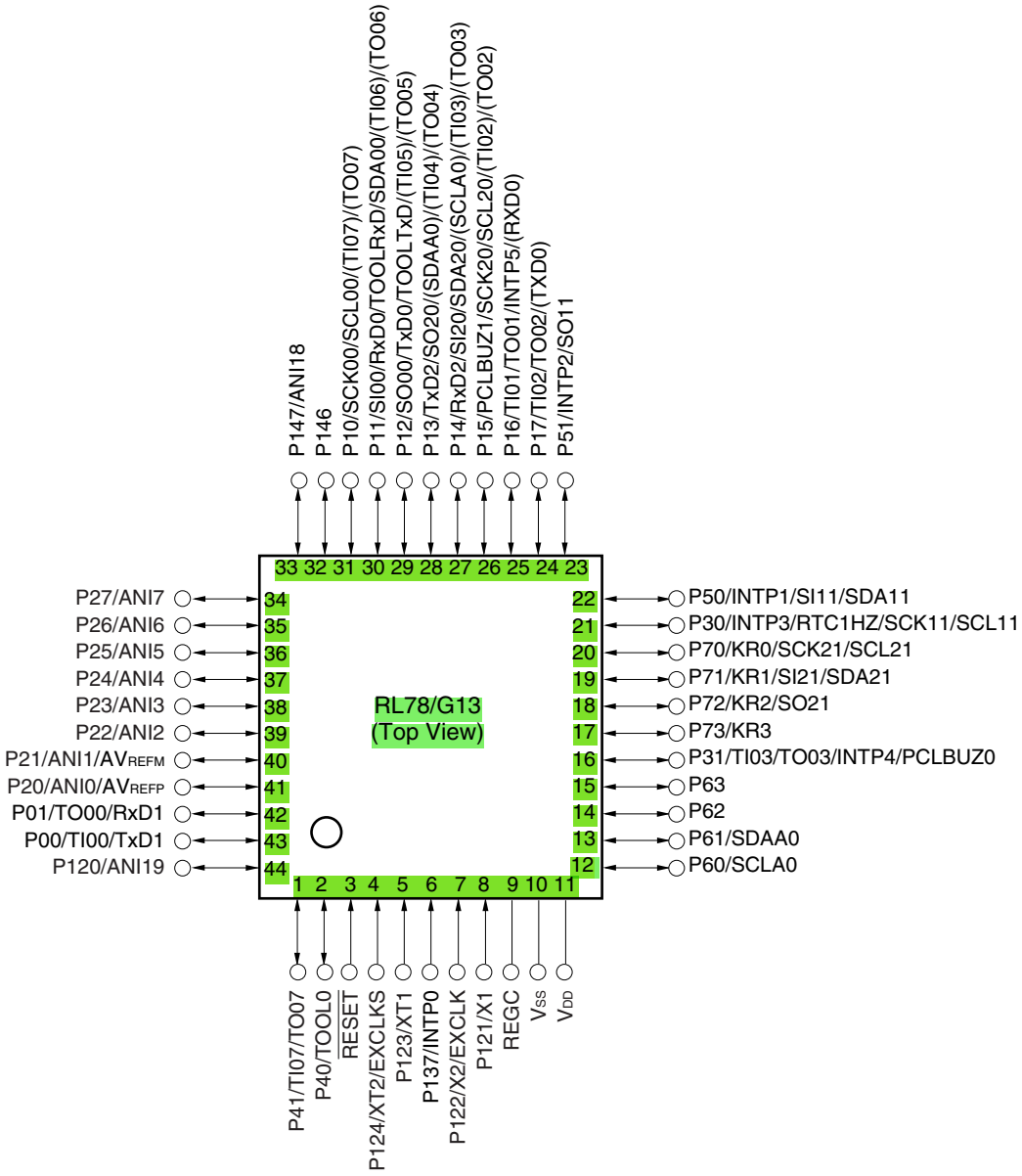

Caution Connect the REGC pin to Vss via a capacitor (0.47 to 1 μF).

Remarks 1. For pin identification, see **1.4 Pin Identification**.

2. Functions in parentheses in the above figure can be assigned via settings in the peripheral I/O redirection register (PIOR). Refer to **Figure 4-8 Format of Peripheral I/O Redirection Register (PIOR)** in the RL78/G13 User's Manual.

1.3.9 48-pin products

- 48-pin plastic LFQFP (7 × 7 mm, 0.5 mm pitch)

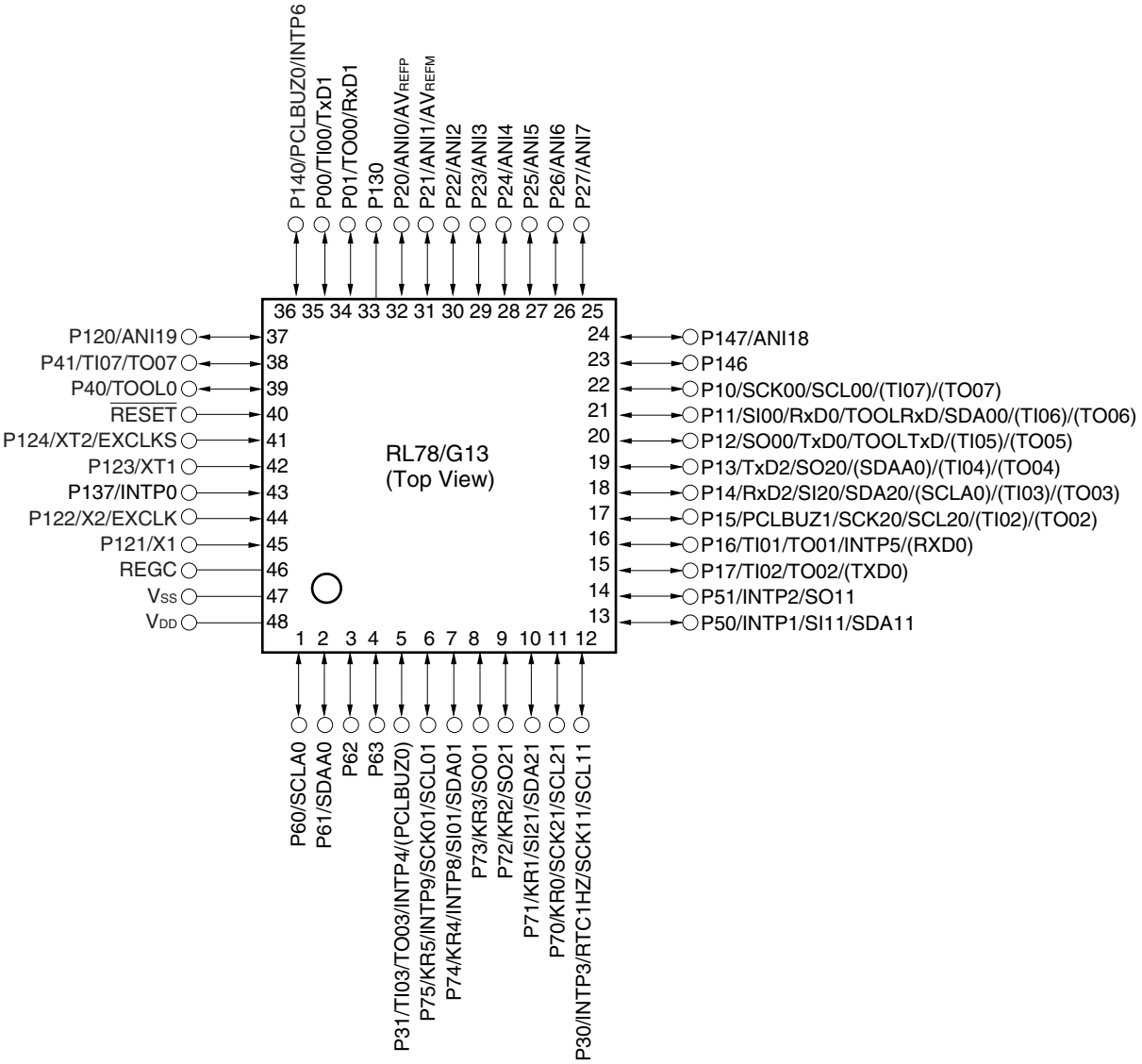

Caution Connect the REGC pin to Vss via a capacitor (0.47 to 1 μF).

Remarks 1. For pin identification, see **1.4 Pin Identification**.

2. Functions in parentheses in the above figure can be assigned via settings in the peripheral I/O redirection register (PIOR). Refer to **Figure 4-8 Format of Peripheral I/O Redirection Register (PIOR)** in the RL78/G13 User's Manual.

- 48-pin plastic HWQFN (7 × 7 mm, 0.5 mm pitch)

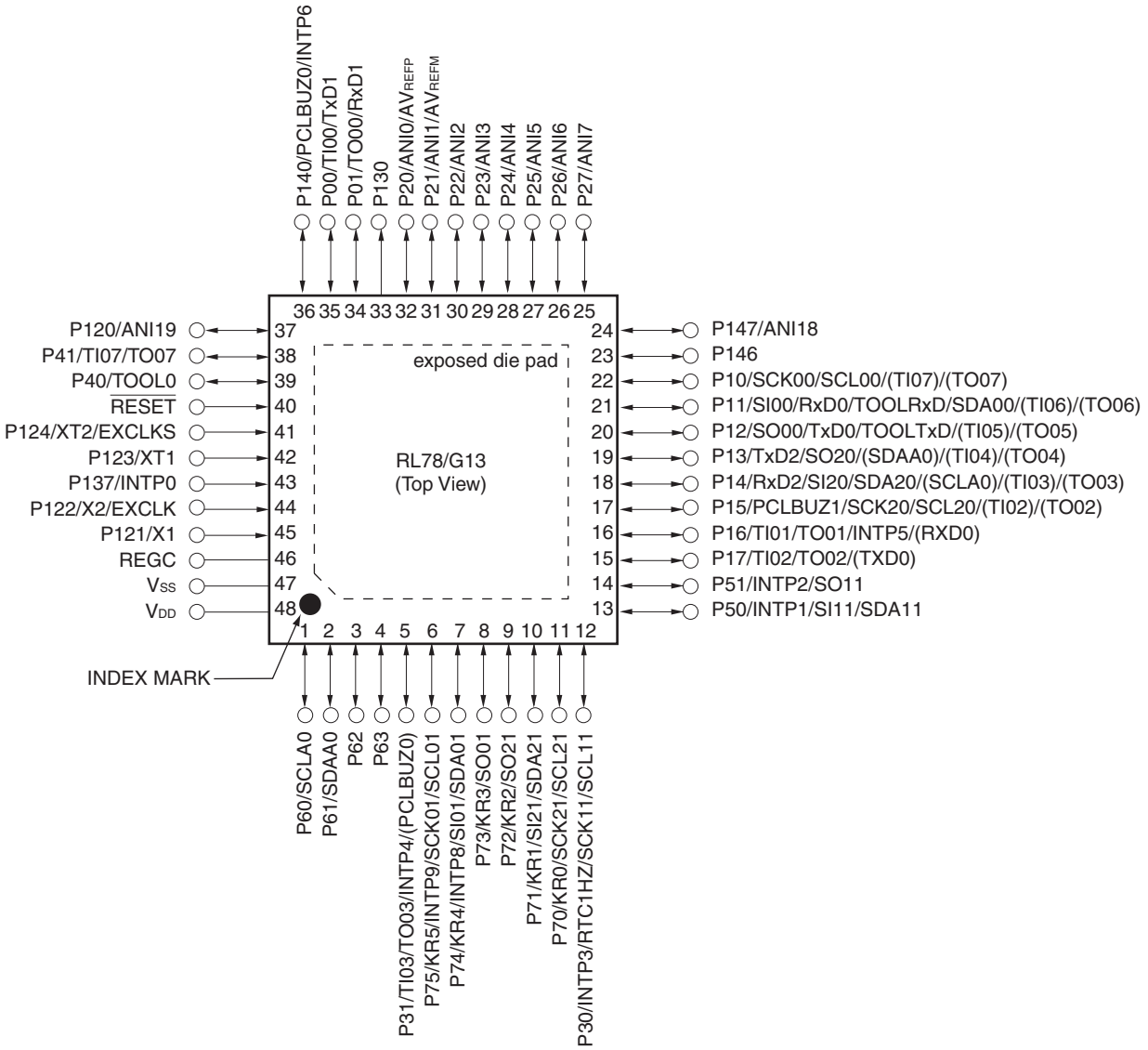

Caution Connect the REGC pin to Vss via a capacitor (0.47 to 1 μF).

Remarks 1. For pin identification, see **1.4 Pin Identification**.

2. Functions in parentheses in the above figure can be assigned via settings in the peripheral I/O redirection register (PIOR). Refer to **Figure 4-8 Format of Peripheral I/O Redirection Register (PIOR)** in the RL78/G13 User's Manual.

3. It is recommended to connect an exposed die pad to Vss.

1.3.10 52-pin products

- 52-pin plastic LQFP (10 × 10 mm, 0.65 mm pitch)

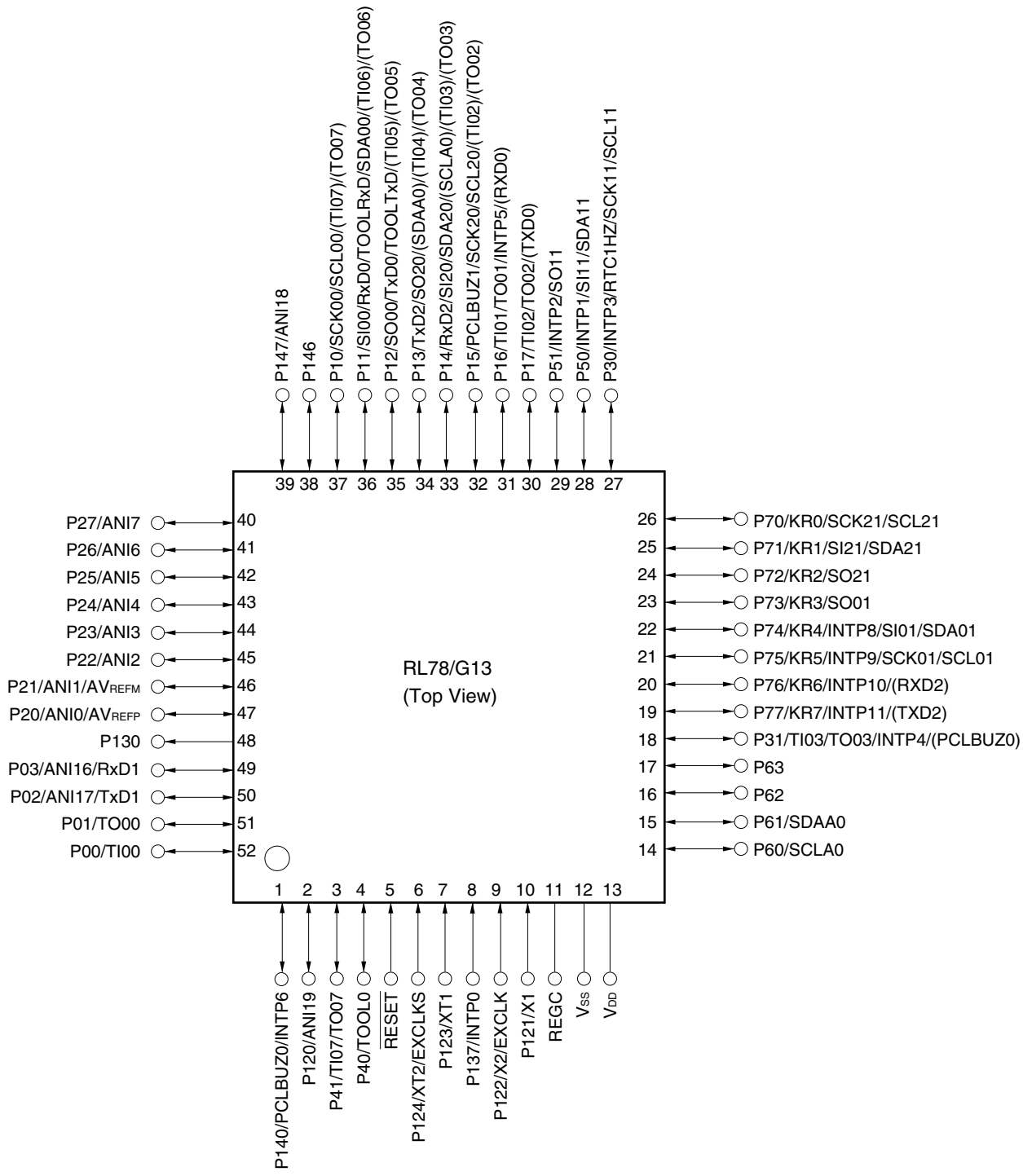

Caution Connect the REGC pin to Vss via a capacitor (0.47 to 1 μF).

Remarks 1. For pin identification, see **1.4 Pin Identification**.

2. Functions in parentheses in the above figure can be assigned via settings in the peripheral I/O redirection register (PIOR). Refer to **Figure 4-8 Format of Peripheral I/O Redirection Register (PIOR)** in the RL78/G13 User's Manual.

1.3.11 64-pin products

- 64-pin plastic LQFP (12 × 12 mm, 0.65 mm pitch)
- 64-pin plastic LFQFP (10 × 10 mm, 0.5 mm pitch)

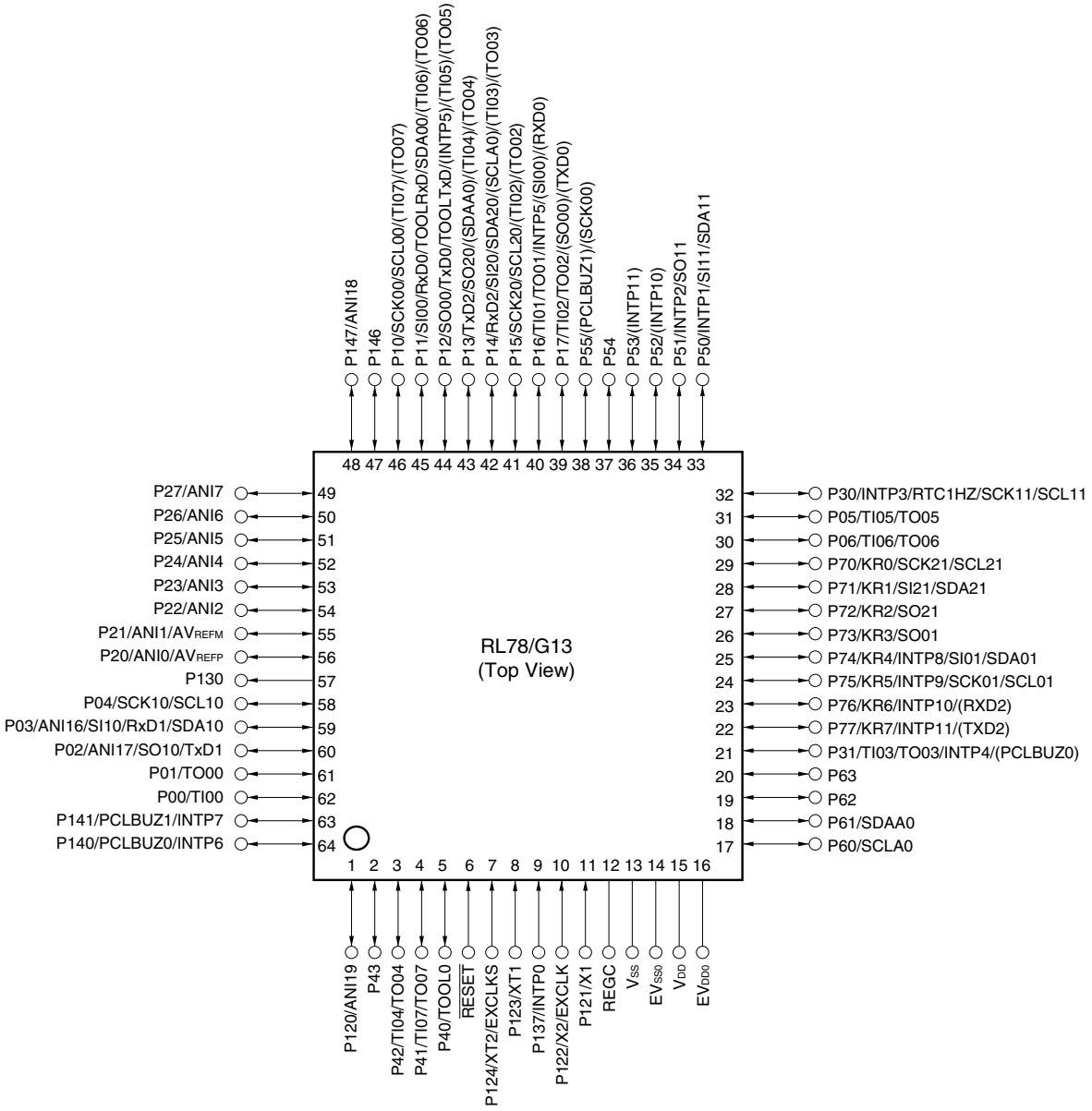

Cautions 1. Make EV_{SS0} pin the same potential as V_{SS} pin.

2. Make V_{DD} pin the potential that is higher than EV_{DD0} pin.

3. Connect the REGC pin to Vss via a capacitor (0.47 to 1 μF).

Remarks 1. For pin identification, see **1.4 Pin Identification**.

2. When using the microcontroller for an application where the noise generated inside the microcontroller must be reduced, it is recommended to supply separate powers to the V_{DD} and EV_{DD0} pins and connect the V_{SS} and EV_{SS0} pins to separate ground lines.

3. Functions in parentheses in the above figure can be assigned via settings in the peripheral I/O redirection register (PIOR). Refer to **Figure 4-8 Format of Peripheral I/O Redirection Register (PIOR)** in the RL78/G13 User's Manual.

- 64-pin plastic VFBGA (4 × 4 mm, 0.4 mm pitch)

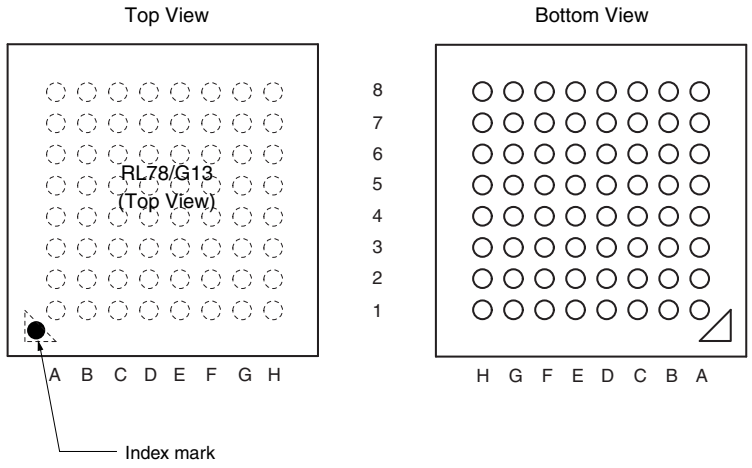

Pin No.	Name	Pin No.	Name	Pin No.	Name	Pin No.	Name
A1	P05/TI05/TO05	C1	P51/INTP2/SO11	E1	P13/TxD2/SO20/ (SDAA0)/(TI04)/(TO04)	G1	P146
A2	P30/INTP3/RTC1HZ /SCK11/SCL11	C2	P71/KR1/SI21/SDA21	E2	P14/RxD2/SI20/SDA20 /(SCLA0)/(TI03)/(TO03)	G2	P25/ANI5
A3	P70/KR0/SCK21 /SCL21	C3	P74/KR4/INTP8/SI01 /SDA01	E3	P15/SCK20/SCL20/ (TI02)/(TO02)	G3	P24/ANI4
A4	P75/KR5/INTP9 /SCK01/SCL01	C4	P52/(INTP10)	E4	P16/TI01/TO01/INTP5 /(SI00)/(RxD0)	G4	P22/ANI2
A5	P77/KR7/INTP11/ (TxD2)	C5	P53/(INTP11)	E5	P03/ANI16/SI10/RxD1 /SDA10	G5	P130
A6	P61/SDAA0	C6	P63	E6	P41/TI07/TO07	G6	P02/ANI17/SO10/TxD1
A7	P60/SCLA0	C7	V_{SS}	E7	$\overline{RESET}$	G7	P00/TI00
A8	EV_{DD0}	C8	P121/X1	E8	P137/INTP0	G8	P124/XT2/EXCLKS
B1	P50/INTP1/SI11 /SDA11	D1	P55/(PCLBUZ1)/ (SCK00)	F1	P10/SCK00/SCL00/ (TI07)/(TO07)	H1	P147/ANI18
B2	P72/KR2/SO21	D2	P06/TI06/TO06	F2	P11/SI00/RxD0 /TOOLRxD/SDA00/ (TI06)/(TO06)	H2	P27/ANI7
B3	P73/KR3/SO01	D3	P17/TI02/TO02/ (SO00)/(TxD0)	F3	P12/SO00/TxD0 /TOOLTxD/(INTP5)/ (TI05)/(TO05)	H3	P26/ANI6
B4	P76/KR6/INTP10/ (RxD2)	D4	P54	F4	P21/ANI1/AV_{REFM}	H4	P23/ANI3
B5	P31/TI03/TO03 /INTP4/(PCLBUZ0)	D5	P42/TI04/TO04	F5	P04/SCK10/SCL10	H5	P20/ANI0/AV_{REFP}
B6	P62	D6	P40/TOOL0	F6	P43	H6	P141/PCLBUZ1/INTP7
B7	V_{DD}	D7	REGC	F7	P01/TO00	H7	P140/PCLBUZ0/INTP6
B8	EV_{SS0}	D8	P122/X2/EXCLK	F8	P123/XT1	H8	P120/ANI19

Cautions 1. Make EV_{SS0} pin the same potential as V_{SS} pin.

2. Make V_{DD} pin the potential that is higher than EV_{DD0} pin.

3. Connect the REGC pin to Vss via a capacitor (0.47 to 1 μF).

Remarks 1. For pin identification, see **1.4 Pin Identification**.

2. When using the microcontroller for an application where the noise generated inside the microcontroller must be reduced, it is recommended to supply separate powers to the V_{DD} and EV_{DD0} pins and connect the V_{SS} and EV_{SS0} pins to separate ground lines.

3. Functions in parentheses in the above figure can be assigned via settings in the peripheral I/O redirection register (PIOR). Refer to **Figure 4-8 Format of Peripheral I/O Redirection Register (PIOR)** in the RL78/G13 User's Manual.

1.3.12 80-pin products

- 80-pin plastic LQFP (14 × 14 mm, 0.65 mm pitch)
- 80-pin plastic LFQFP (12 × 12 mm, 0.5 mm pitch)

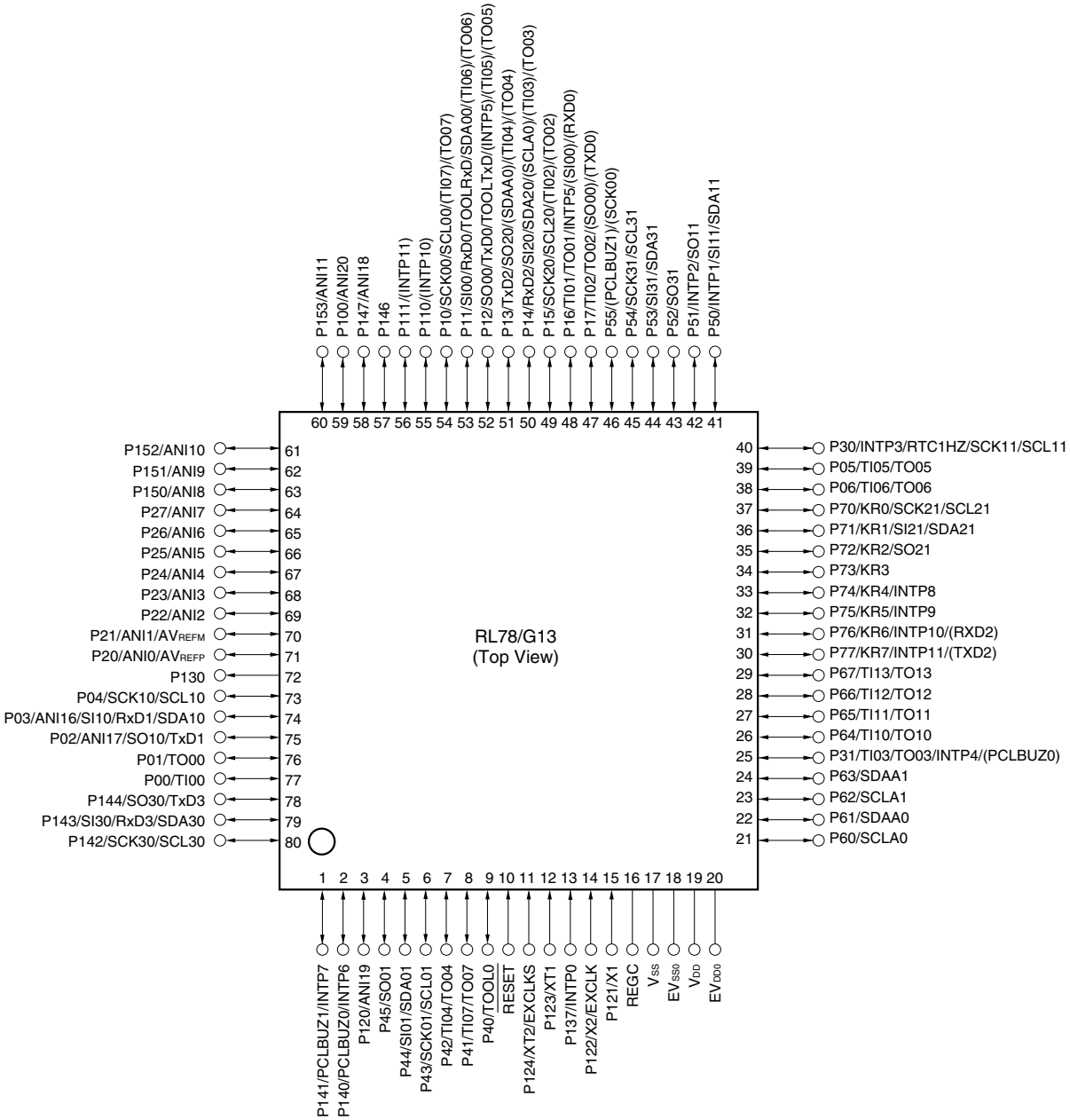

Cautions 1. Make EV_{SS0} pin the same potential as V_{SS} pin.

2. Make V_{DD} pin the potential that is higher than EV_{DD0} pin.

3. Connect the REGC pin to Vss via a capacitor (0.47 to 1 μF).

Remarks 1. For pin identification, see **1.4 Pin Identification**.

2. When using the microcontroller for an application where the noise generated inside the microcontroller must be reduced, it is recommended to supply separate powers to the V_{DD} and EV_{DD0} pins and connect the V_{SS} and EV_{SS0} pins to separate ground lines.

3. Functions in parentheses in the above figure can be assigned via settings in the peripheral I/O redirection register (PIOR). Refer to **Figure 4-8 Format of Peripheral I/O Redirection Register (PIOR)** in the RL78/G13 User's Manual.

1.3.13 100-pin products

- 100-pin plastic LQFP (14 × 14 mm, 0.5 mm pitch)

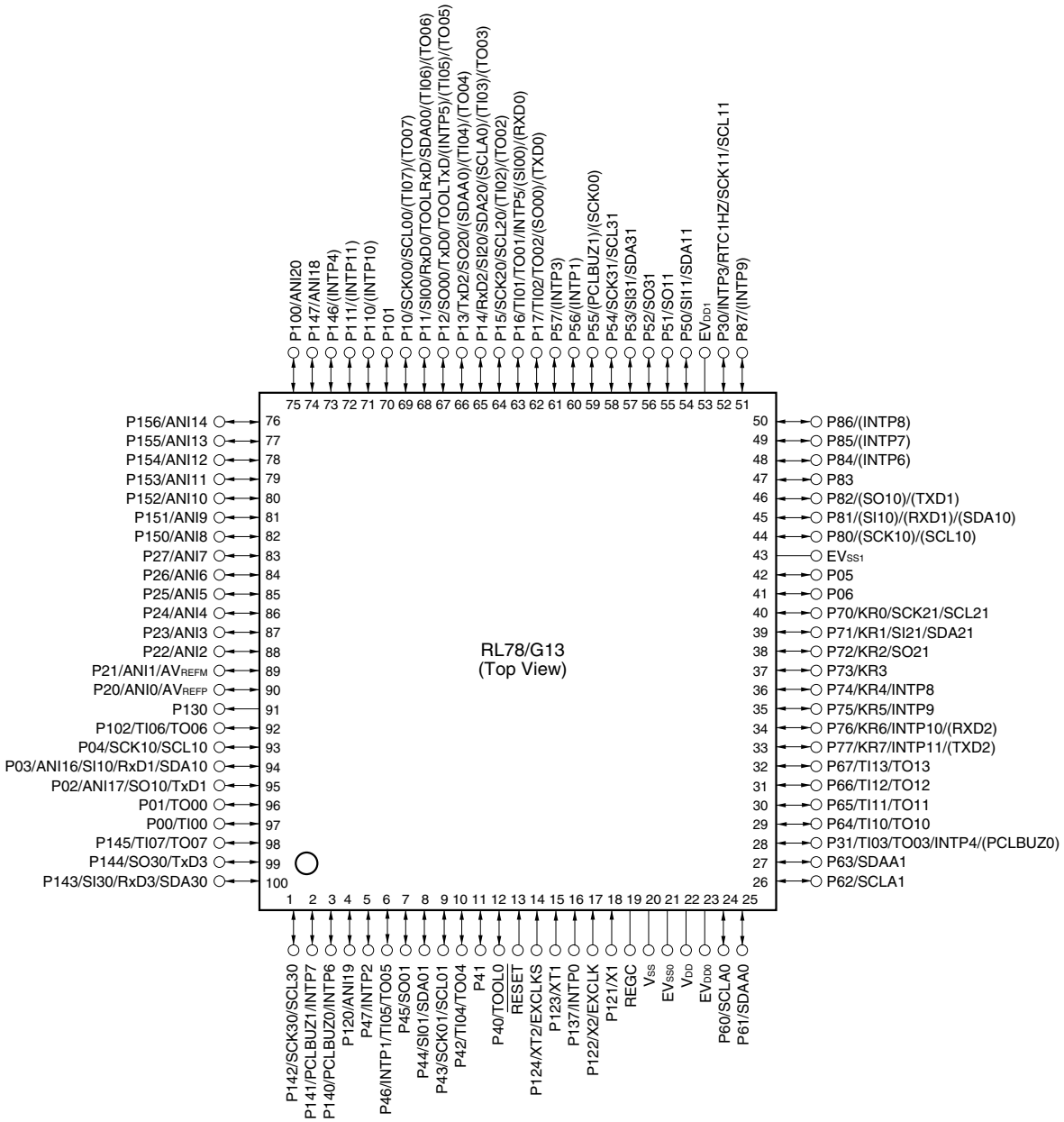

Cautions 1. Make EV_{SS0}, EV_{SS1} pins the same potential as V_{SS} pin.

2. Make V_{DD} pin the potential that is higher than EV_{DD0}, EV_{DD1} pins (EV_{DD0} = EV_{DD1}).

3. Connect the REGC pin to Vss via a capacitor (0.47 to 1 μF).

Remarks 1. For pin identification, see **1.4 Pin Identification**.

2. When using the microcontroller for an application where the noise generated inside the microcontroller must be reduced, it is recommended to supply separate powers to the V_{DD}, EV_{DD0} and EV_{DD1} pins and connect the V_{SS}, EV_{SS0} and EV_{SS1} pins to separate ground lines.

3. Functions in parentheses in the above figure can be assigned via settings in the peripheral I/O redirection register (PIOR). Refer to **Figure 4-8 Format of Peripheral I/O Redirection Register (PIOR)** in the RL78/G13 User's Manual.

- 100-pin plastic LQFP (14 × 20 mm, 0.65 mm pitch)

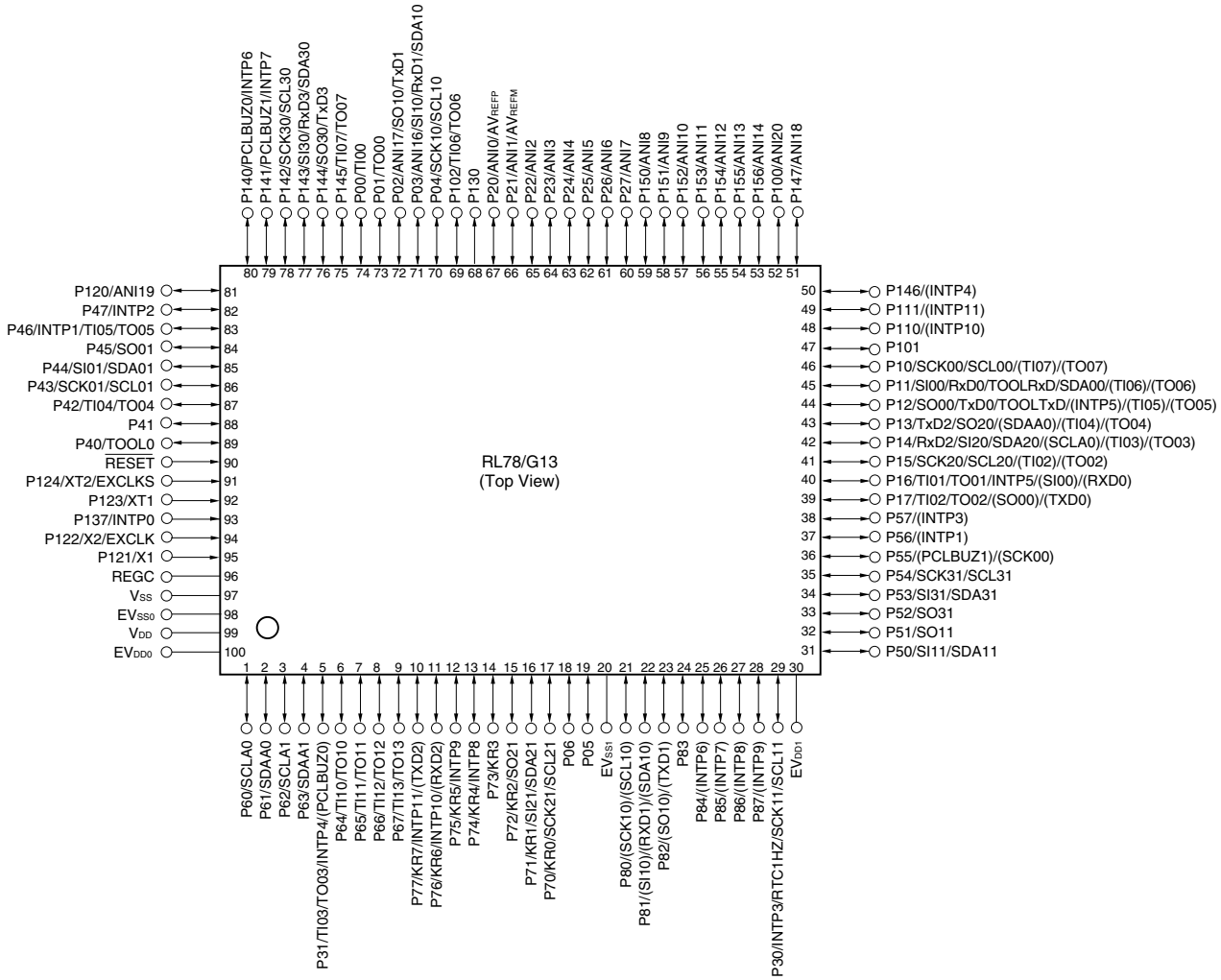

Cautions 1. Make EV_{SS0}, EV_{SS1} pins the same potential as V_{SS} pin.

2. Make V_{DD} pin the potential that is higher than EV_{DD0}, EV_{DD1} pins ($EV_{DD0} = EV_{DD1}$).

3. Connect the REGC pin to Vss via a capacitor (0.47 to 1 μF).

Remarks 1. For pin identification, see **1.4 Pin Identification**.

2. When using the microcontroller for an application where the noise generated inside the microcontroller must be reduced, it is recommended to supply separate powers to the V_{DD}, EV_{DD0} and EV_{DD1} pins and connect the V_{SS}, EV_{SS0} and EV_{SS1} pins to separate ground lines.

3. Functions in parentheses in the above figure can be assigned via settings in the peripheral I/O redirection register (PIOR). Refer to **Figure 4-8 Format of Peripheral I/O Redirection Register (PIOR)** in the RL78/G13 User's Manual.

1.3.14 128-pin products

- 128-pin plastic LFQFP (14 × 20 mm, 0.5 mm pitch)

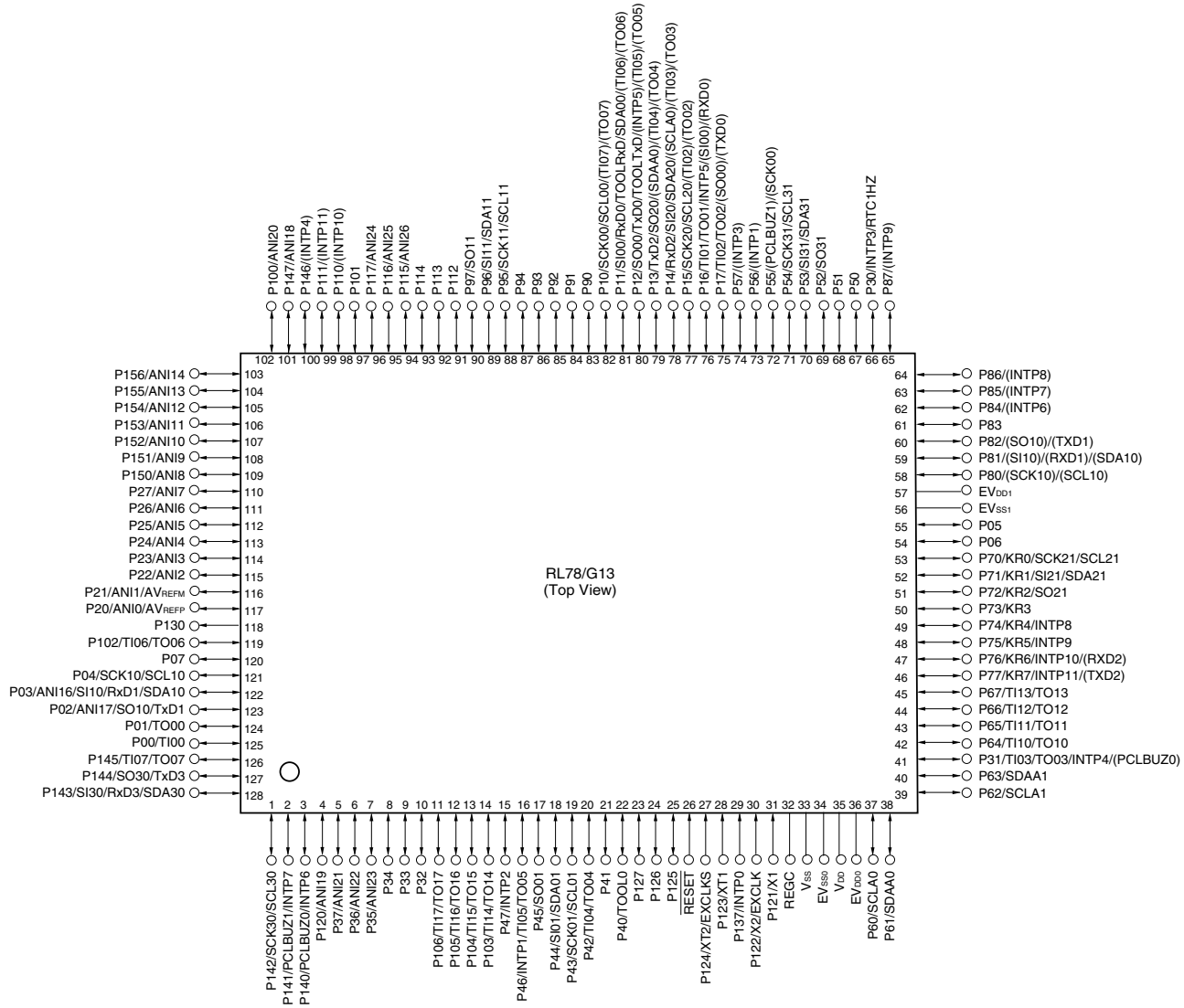

Cautions 1. Make EV_{SS0}, EV_{SS1} pins the same potential as V_{SS} pin.

2. Make V_{DD} pin the potential that is higher than EV_{DD0}, EV_{DD1} pins (EV_{DD0} = EV_{DD1}).

3. Connect the REGC pin to Vss via a capacitor (0.47 to 1 μF).

Remarks 1. For pin identification, see **1.4 Pin Identification**.

2. When using the microcontroller for an application where the noise generated inside the microcontroller must be reduced, it is recommended to supply separate powers to the V_{DD}, EV_{DD0} and EV_{DD1} pins and connect the V_{SS}, EV_{SS0} and EV_{SS1} pins to separate ground lines.

3. Functions in parentheses in the above figure can be assigned via settings in the peripheral I/O redirection register (PIOR). Refer to **Figure 4-8 Format of Peripheral I/O Redirection Register (PIOR)** in the RL78/G13 User's Manual.

1.4 Pin Identification

ANI0 to ANI14, ANI16 to ANI26:	Analog input	REGC:	Regulator capacitance
		RESET:	Reset
AV_{REFM}:	A/D converter reference potential (– side) input	RTC1HZ:	Real-time clock correction clock (1 Hz) output
AV_{REFP}:	A/D converter reference potential (+ side) input	RxD0 to RxD3:	Receive data
EV_{DD0}, EV_{DD1}:	Power supply for port	SCK00, SCK01, SCK10, SCK11, SCK20, SCK21,	
EV_{SS0}, EV_{SS1}:	Ground for port	SCLA0, SCLA1:	Serial clock input/output
EXCLK:	External clock input (Main system clock)	SCLA0, SCLA1, SCL00, SCL01, SCL10, SCL11,	
EXCLKS:	External clock input (Subsystem clock)	SCL20,SCL21, SCL30, SCL31:	Serial clock output
INTP0 to INTP11:	Interrupt request from peripheral	SDAA0, SDAA1, SDA00, SDA01,SDA10, SDA11,	
KR0 to KR7:	Key return	SDA20,SDA21, SDA30,	
P00 to P07:	Port 0	SDA31:	Serial data input/output
P10 to P17:	Port 1	SI00, SI01, SI10, SI11,	
P20 to P27:	Port 2	SI20, SI21, SI30, SI31:	Serial data input
P30 to P37:	Port 3	SO00, SO01, SO10,	
P40 to P47:	Port 4	SO11, SO20, SO21,	
P50 to P57:	Port 5	SO30, SO31:	Serial data output
P60 to P67:	Port 6	TI00 to TI07,	
P70 to P77:	Port 7	TI10 to TI17:	Timer input
P80 to P87:	Port 8	TO00 to TO07,	
P90 to P97:	Port 9	TO10 to TO17:	Timer output
P100 to P106:	Port 10	TOOL0:	Data input/output for tool
P110 to P117:	Port 11	TOOLRxD, TOOLTxD:	Data input/output for external device
P120 to P127:	Port 12	TxD0 to TxD3:	Transmit data
P130, P137:	Port 13	V_{DD}:	Power supply
P140 to P147:	Port 14	V_{SS}:	Ground
P150 to P156:	Port 15	X1, X2:	Crystal oscillator (main system clock)
PCLBUZ0, PCLBUZ1:	Programmable clock output/buzzer output	XT1, XT2:	Crystal oscillator (subsystem clock)

1.5 Block Diagram

1.5.1 20-pin products

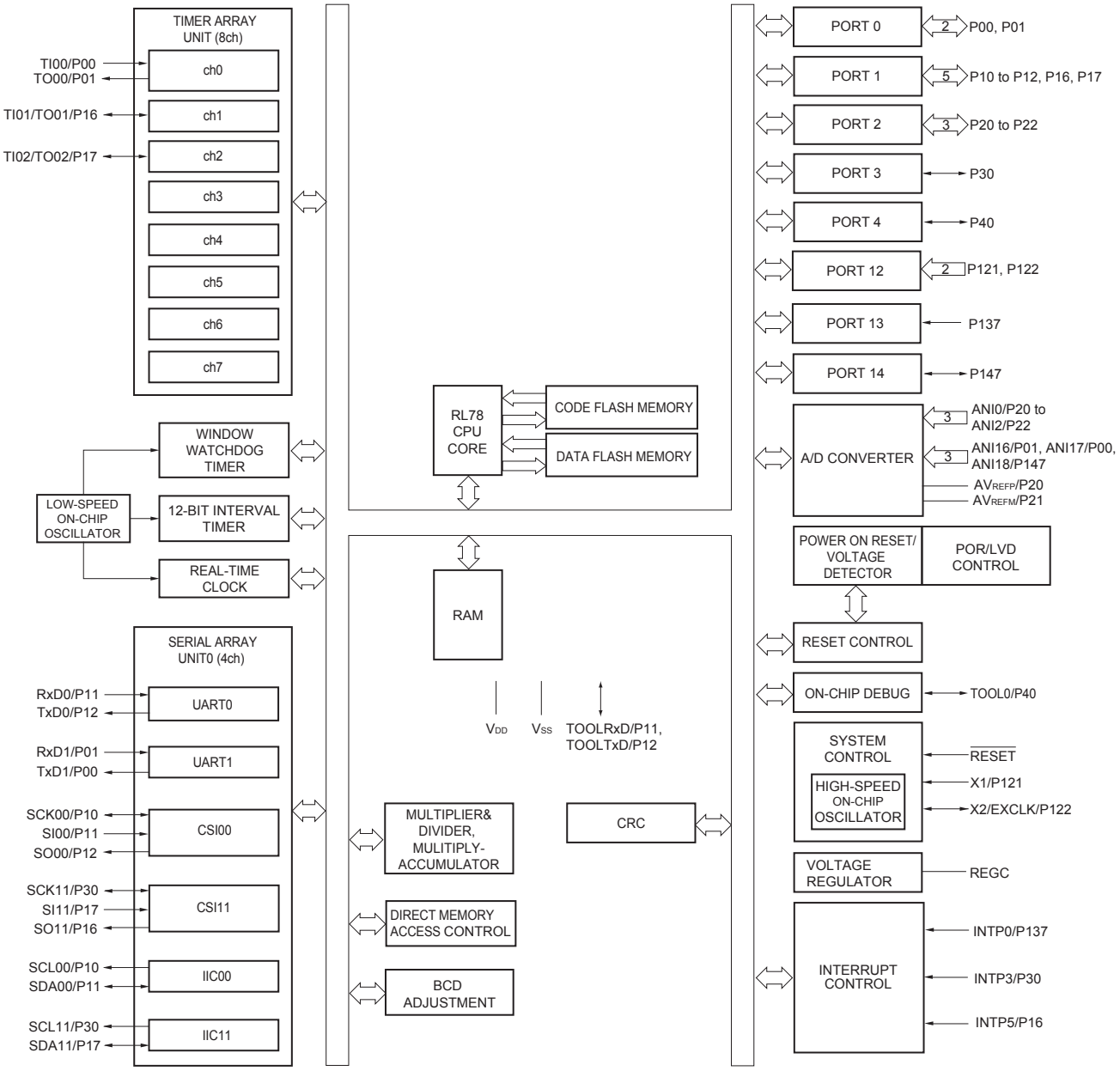

1.5.2 24-pin products

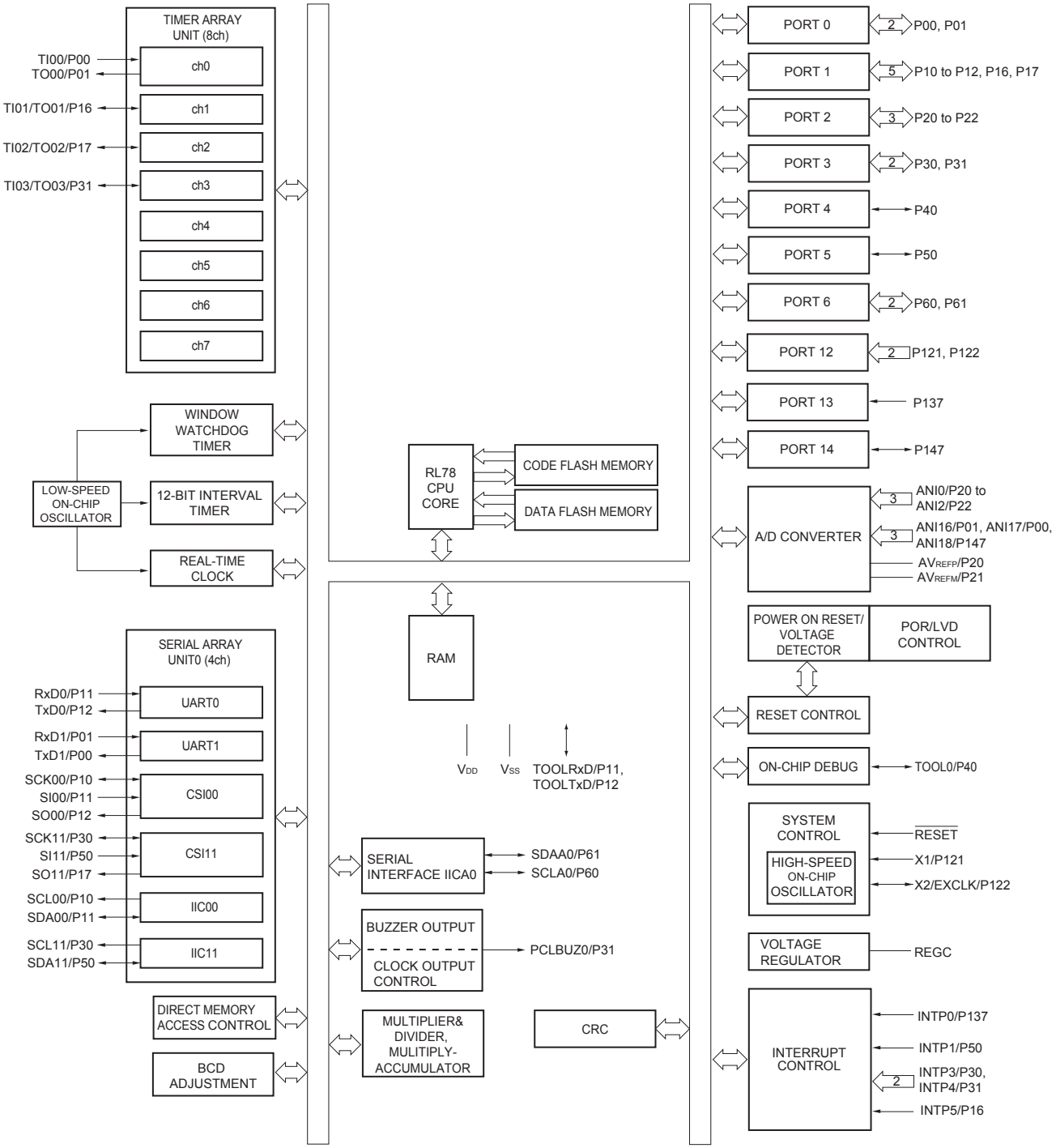

1.5.3 25-pin products

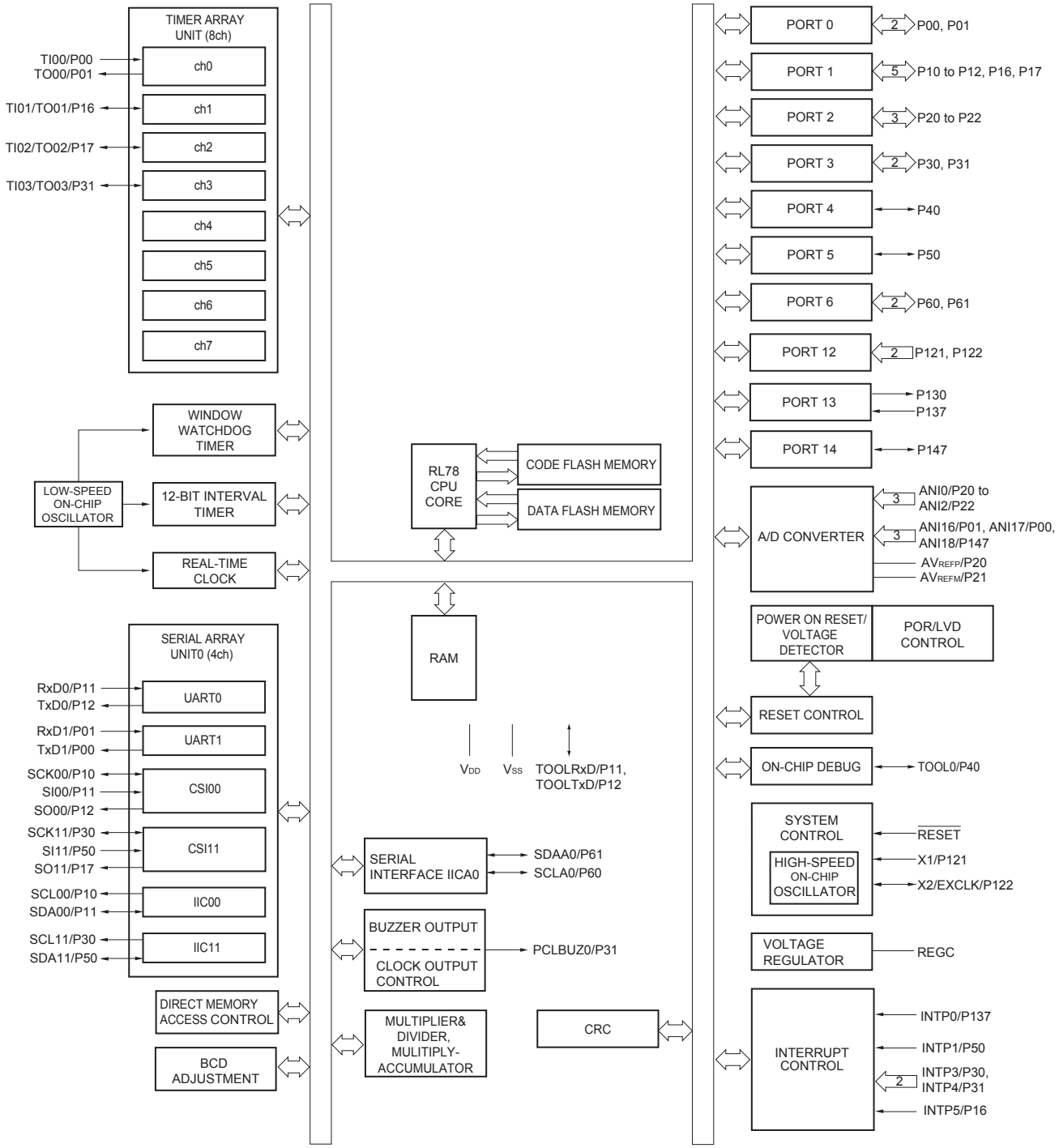

1.5.4 30-pin products

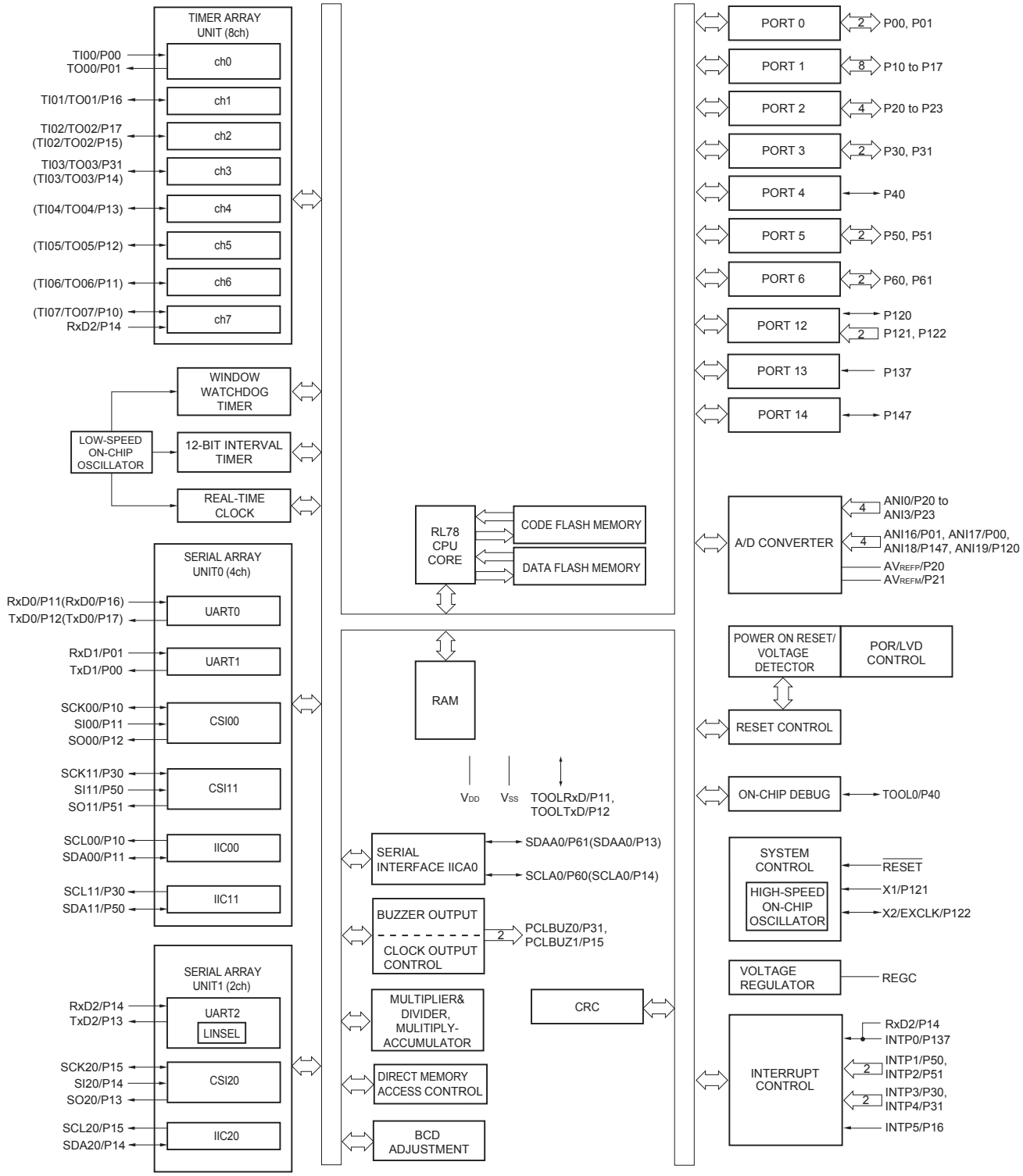

Remark Functions in parentheses in the above figure can be assigned via settings in the peripheral I/O redirection register (PIOR). Refer to **Figure 4-8 Format of Peripheral I/O Redirection Register (PIOR)** in the RL78/G13 User's Manual.

1.5.5 32-pin products

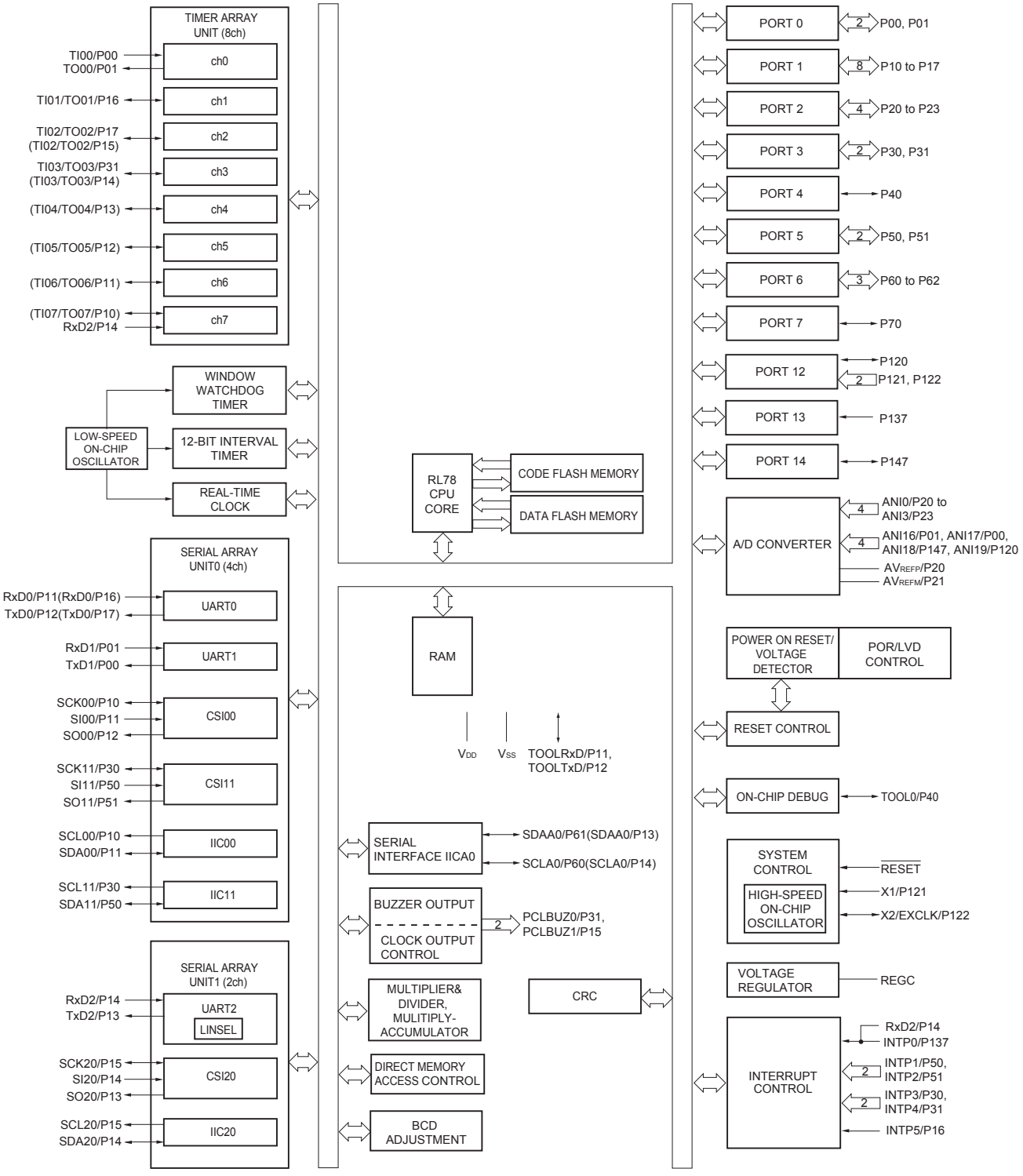

Remark Functions in parentheses in the above figure can be assigned via settings in the peripheral I/O redirection register (PIOR). Refer to **Figure 4-8 Format of Peripheral I/O Redirection Register (PIOR)** in the RL78/G13 User's Manual.

1.5.6 36-pin products

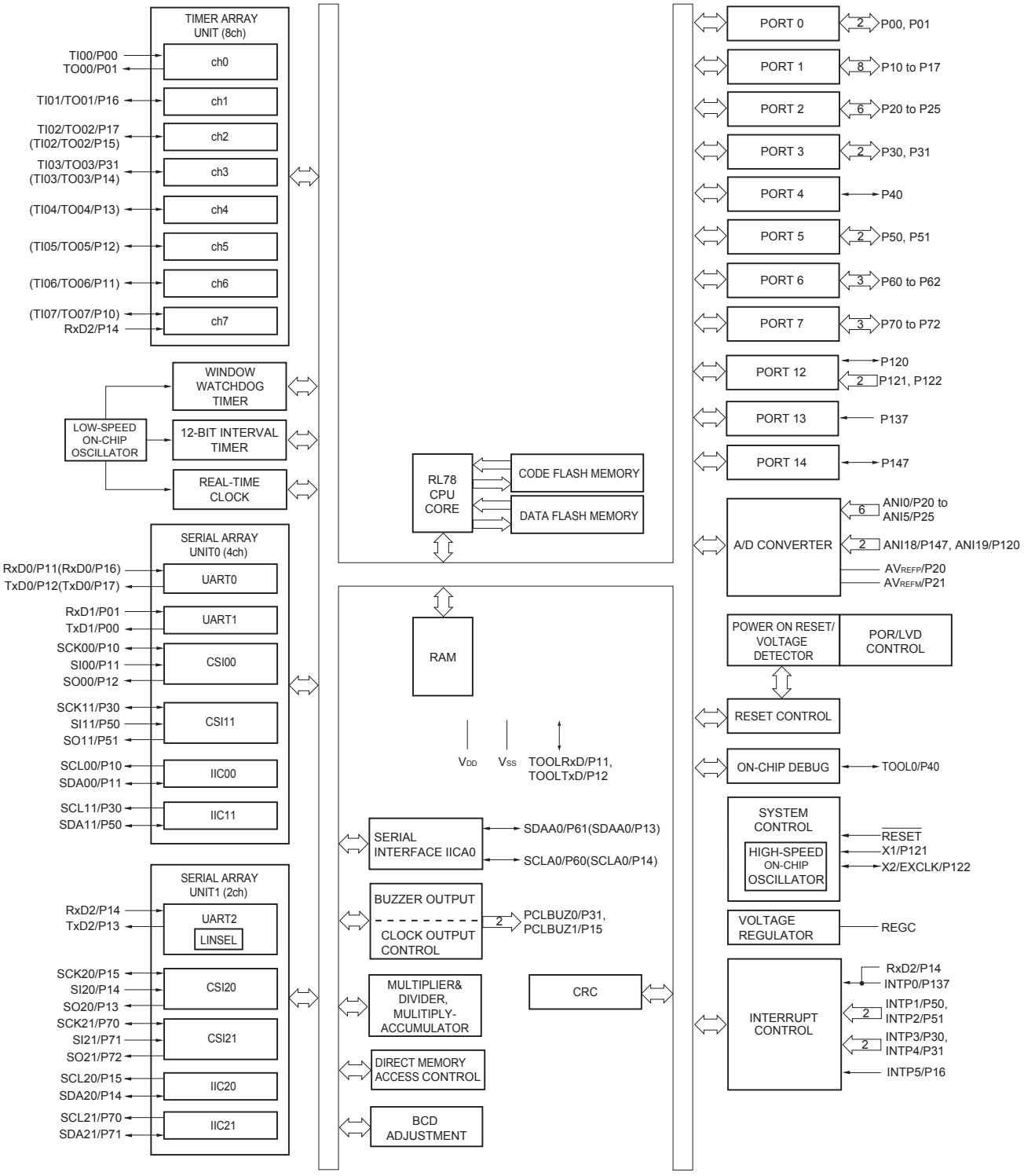

Remark Functions in parentheses in the above figure can be assigned via settings in the peripheral I/O redirection register (PIOR). Refer to **Figure 4-8 Format of Peripheral I/O Redirection Register (PIOR)** in the RL78/G13 User's Manual.

1.5.7 40-pin products

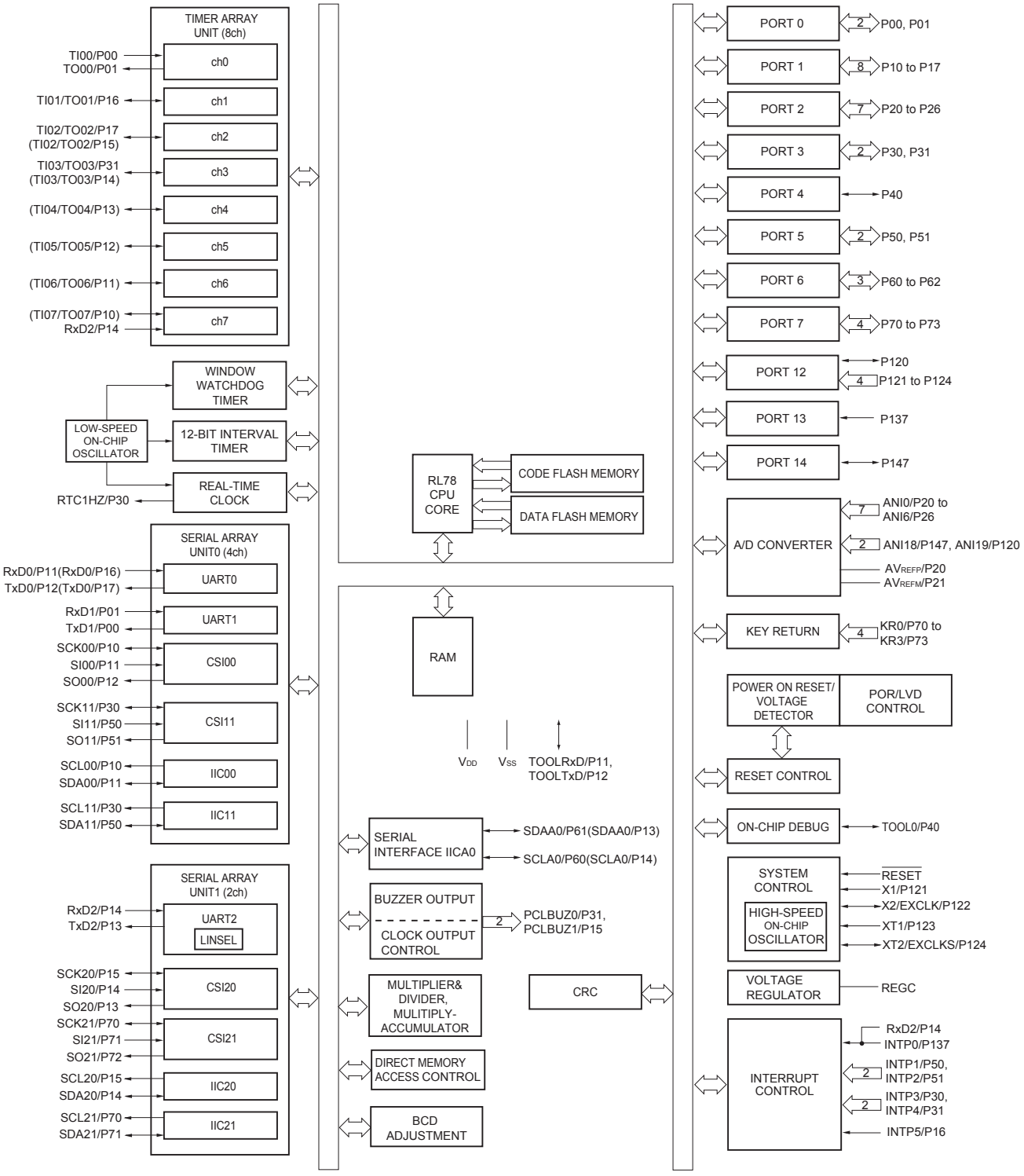

Remark Functions in parentheses in the above figure can be assigned via settings in the peripheral I/O redirection register (PIOR). Refer to **Figure 4-8 Format of Peripheral I/O Redirection Register (PIOR)** in the RL78/G13 User's Manual.

1.5.8 44-pin products

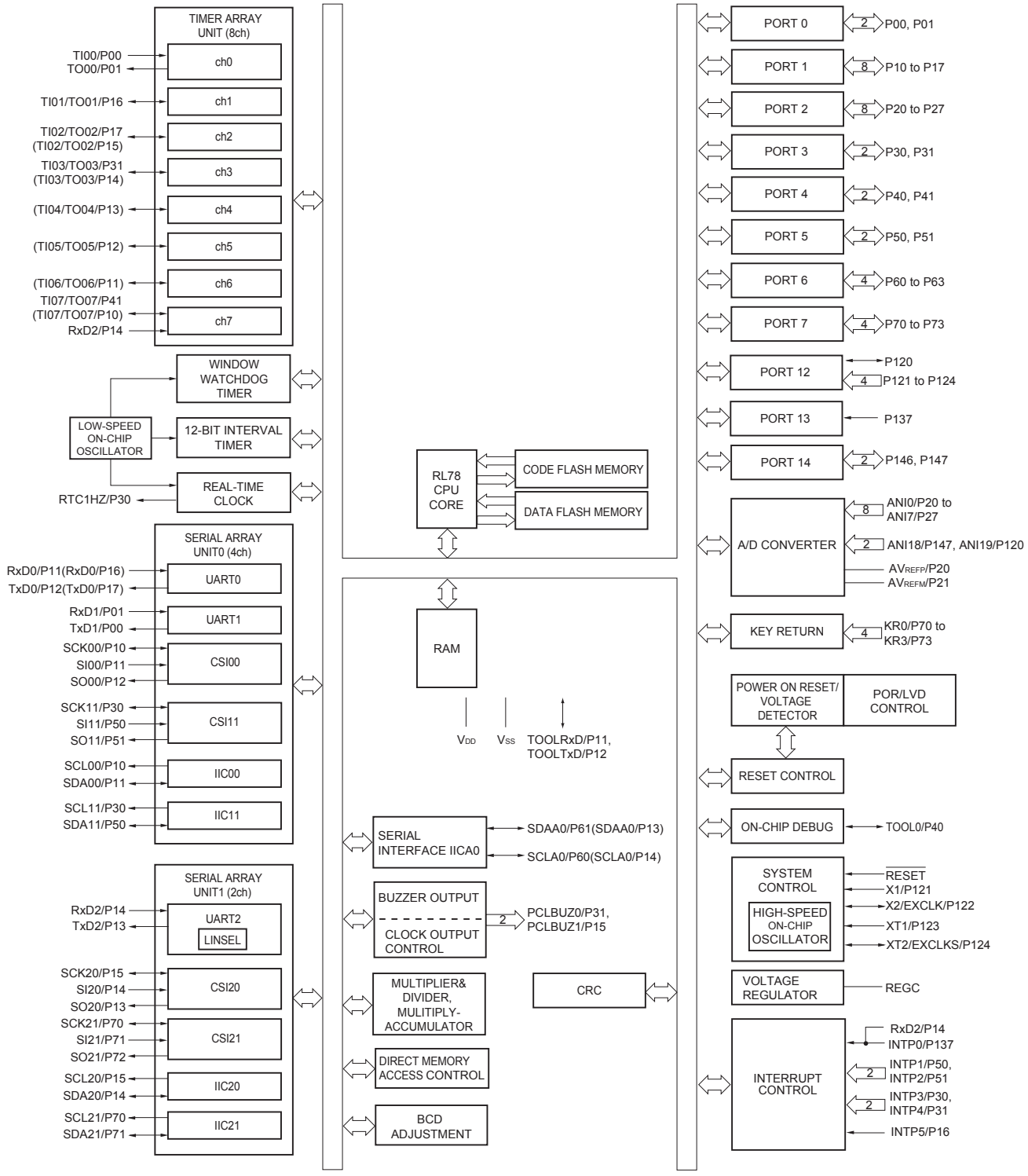

Remark Functions in parentheses in the above figure can be assigned via settings in the peripheral I/O redirection register (PIOR). Refer to **Figure 4-8 Format of Peripheral I/O Redirection Register (PIOR)** in the RL78/G13 User's Manual.

1.5.9 48-pin products

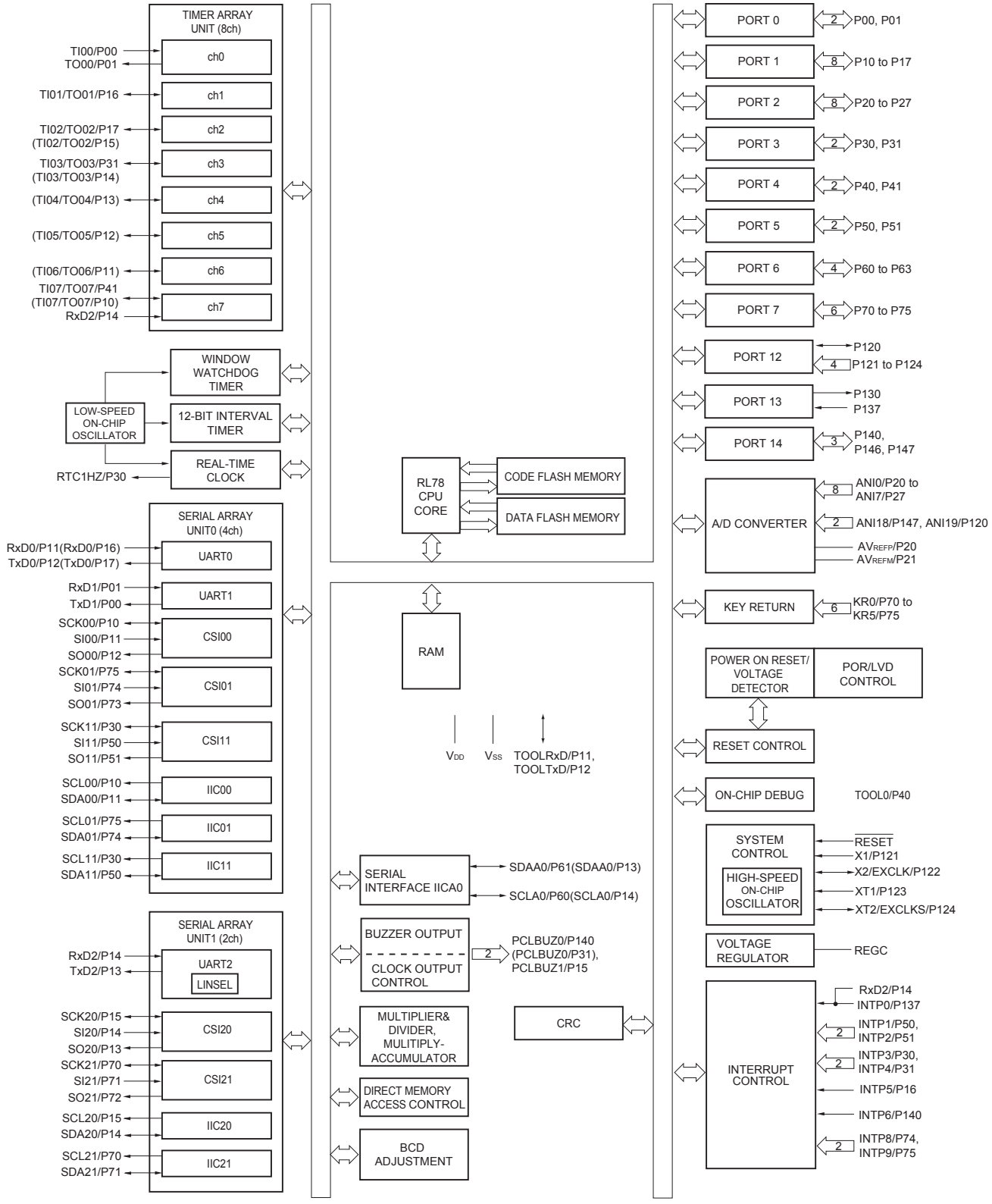

Remark Functions in parentheses in the above figure can be assigned via settings in the peripheral I/O redirection register (PIOR). Refer to **Figure 4-8 Format of Peripheral I/O Redirection Register (PIOR)** in the RL78/G13 User's Manual.

1.5.10 52-pin products

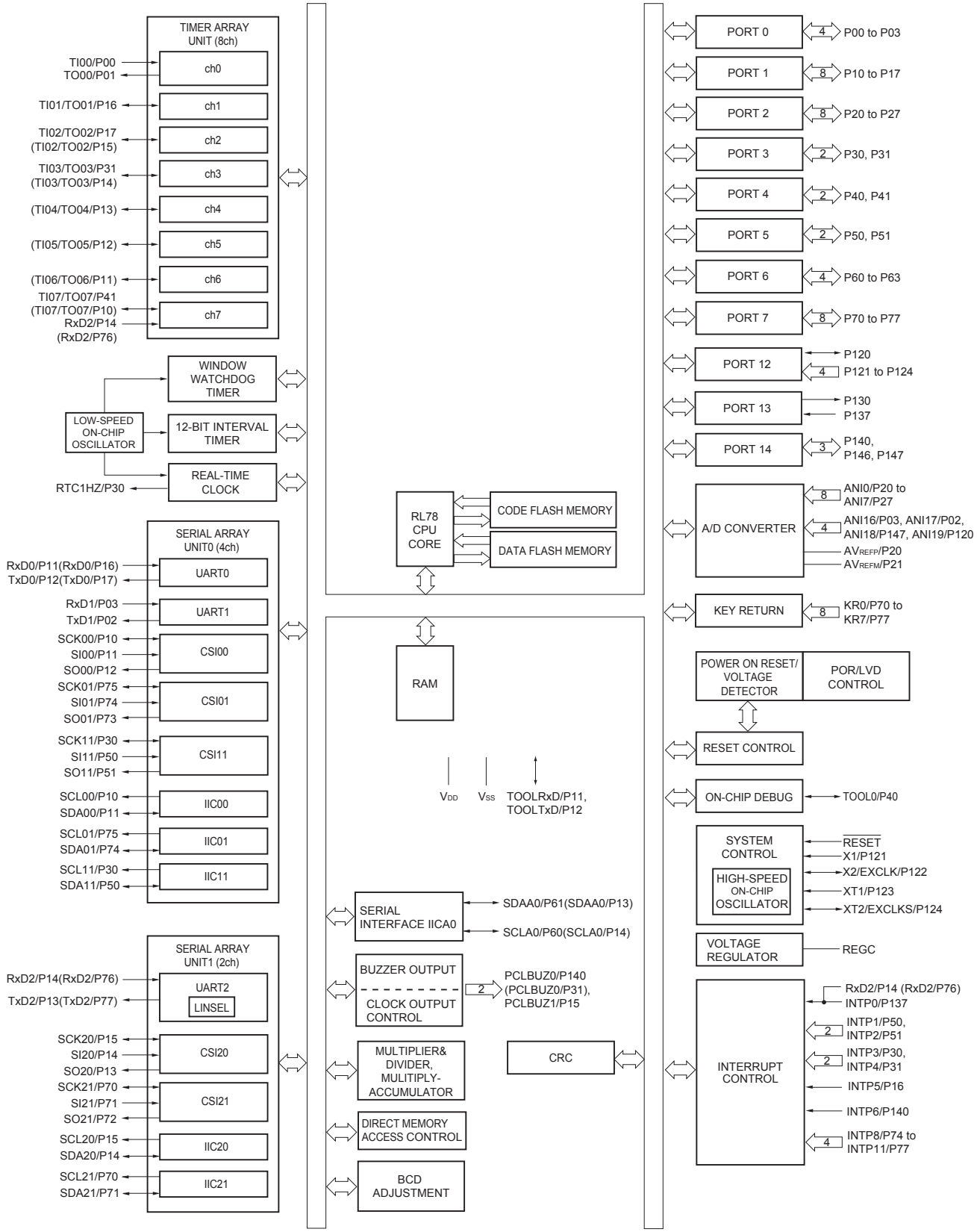

Remark Functions in parentheses in the above figure can be assigned via settings in the peripheral I/O redirection register (PIOR). Refer to **Figure 4-8 Format of Peripheral I/O Redirection Register (PIOR)** in the RL78/G13 User's Manual.

1.5.11 64-pin products

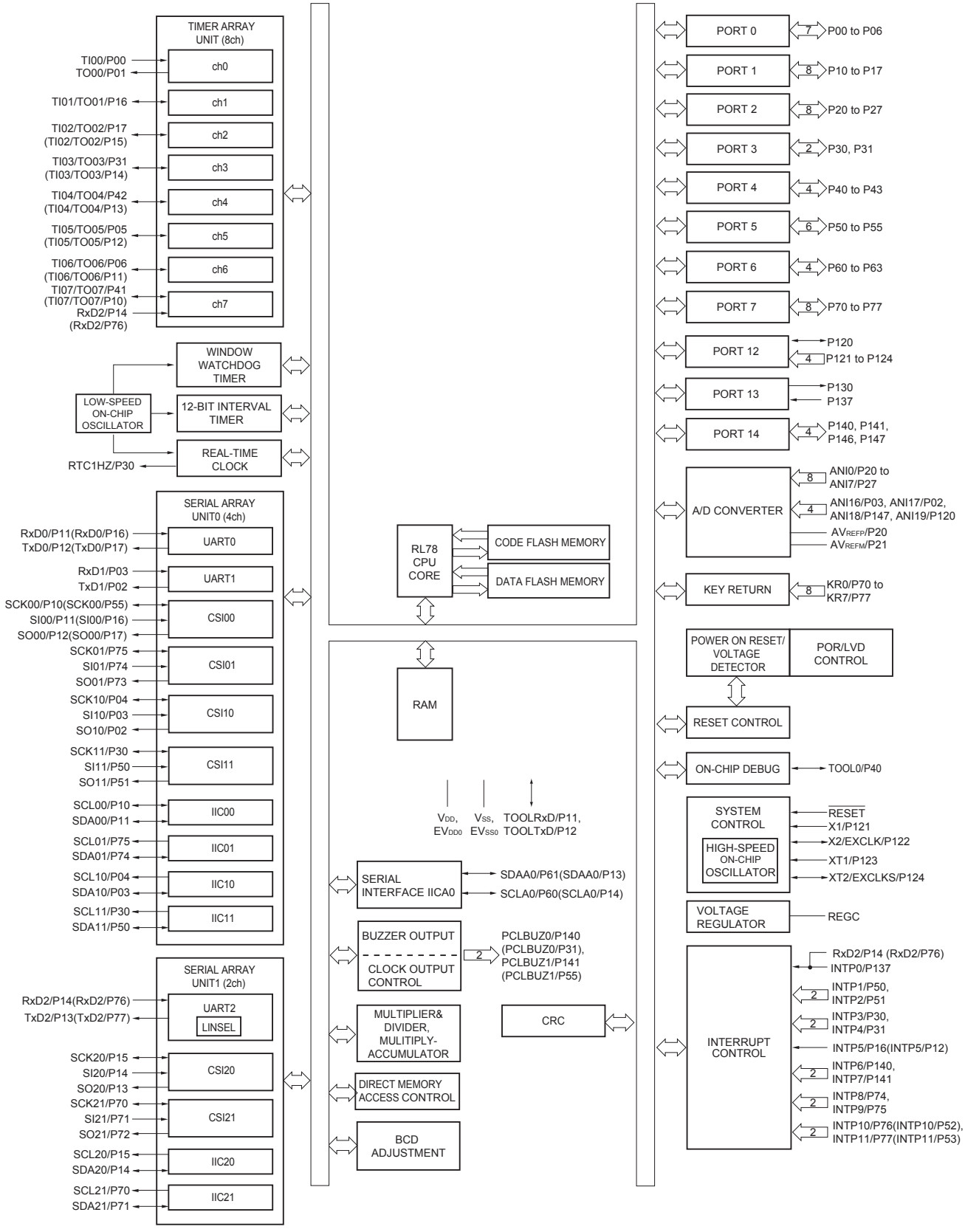

Remark Functions in parentheses in the above figure can be assigned via settings in the peripheral I/O redirection register (PIOR). Refer to **Figure 4-8 Format of Peripheral I/O Redirection Register (PIOR)** in the RL78/G13 User's Manual.

1.5.12 80-pin products

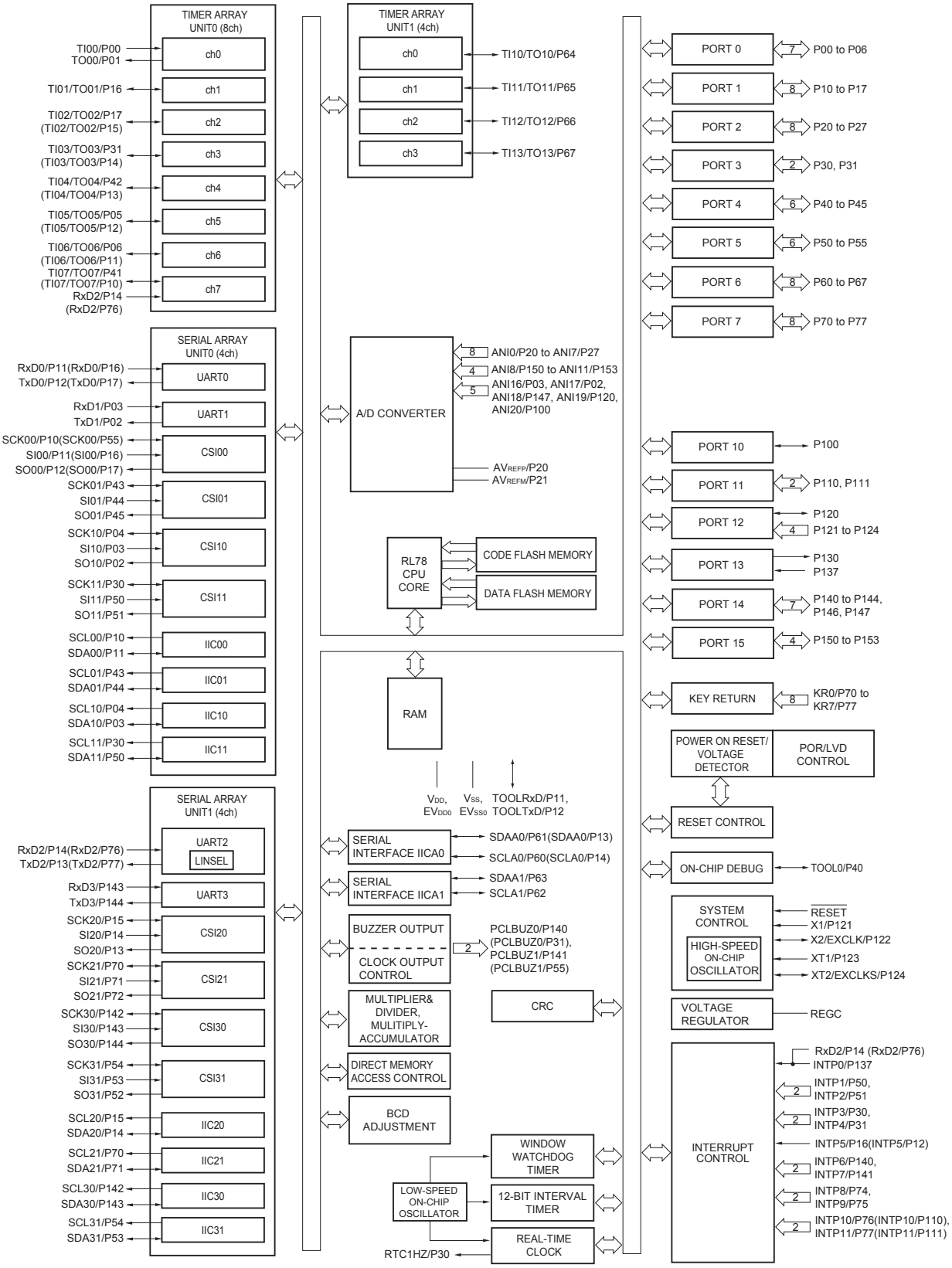

Remark Functions in parentheses in the above figure can be assigned via settings in the peripheral I/O redirection register (PIOR). Refer to **Figure 4-8 Format of Peripheral I/O Redirection Register (PIOR)** in the RL78/G13 User's Manual.

1.5.13 100-pin products

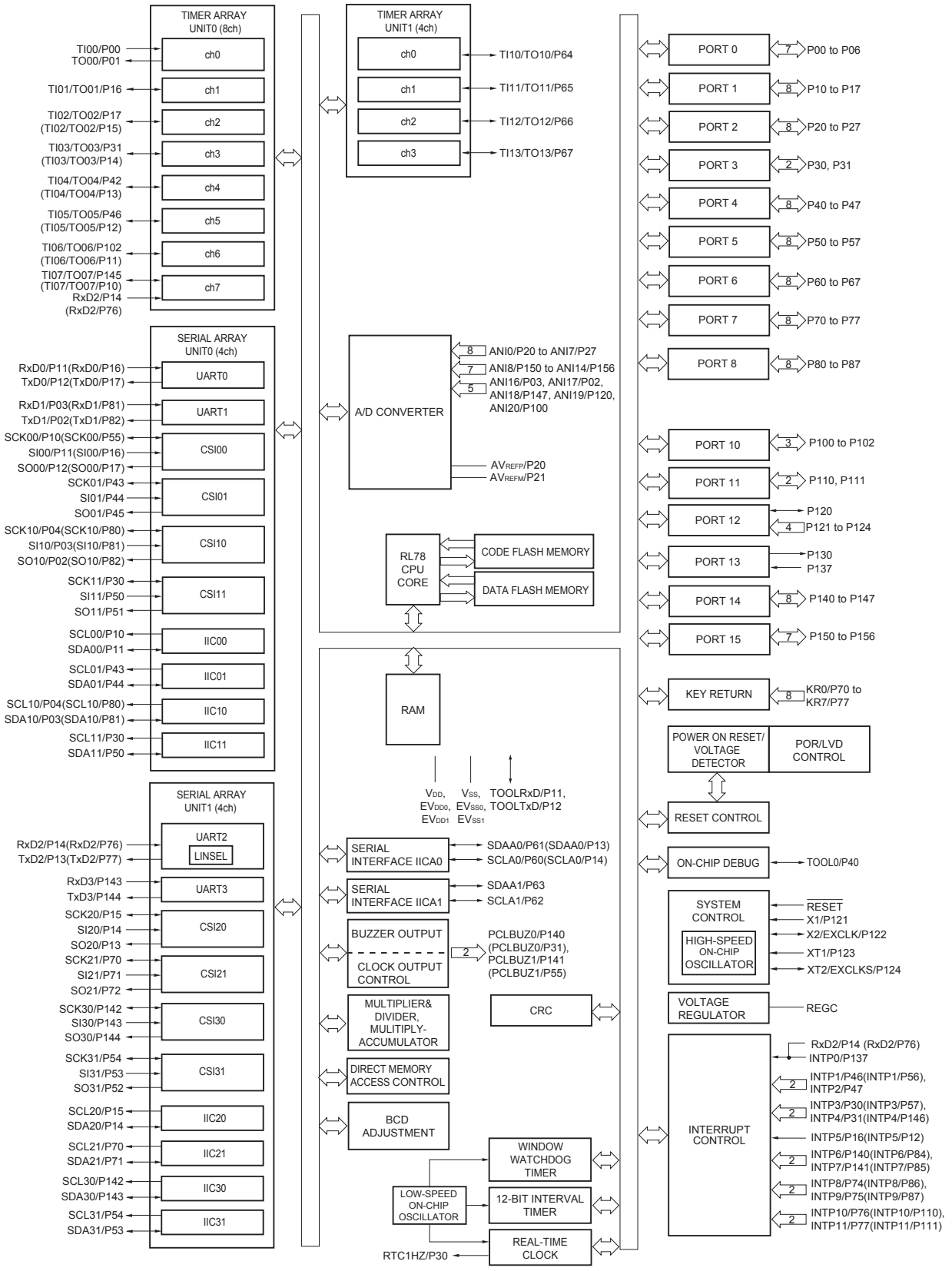

Remark Functions in parentheses in the above figure can be assigned via settings in the peripheral I/O redirection register (PIOR). Refer to **Figure 4-8 Format of Peripheral I/O Redirection Register (PIOR)** in the RL78/G13 User's Manual.

1.5.14 128-pin products

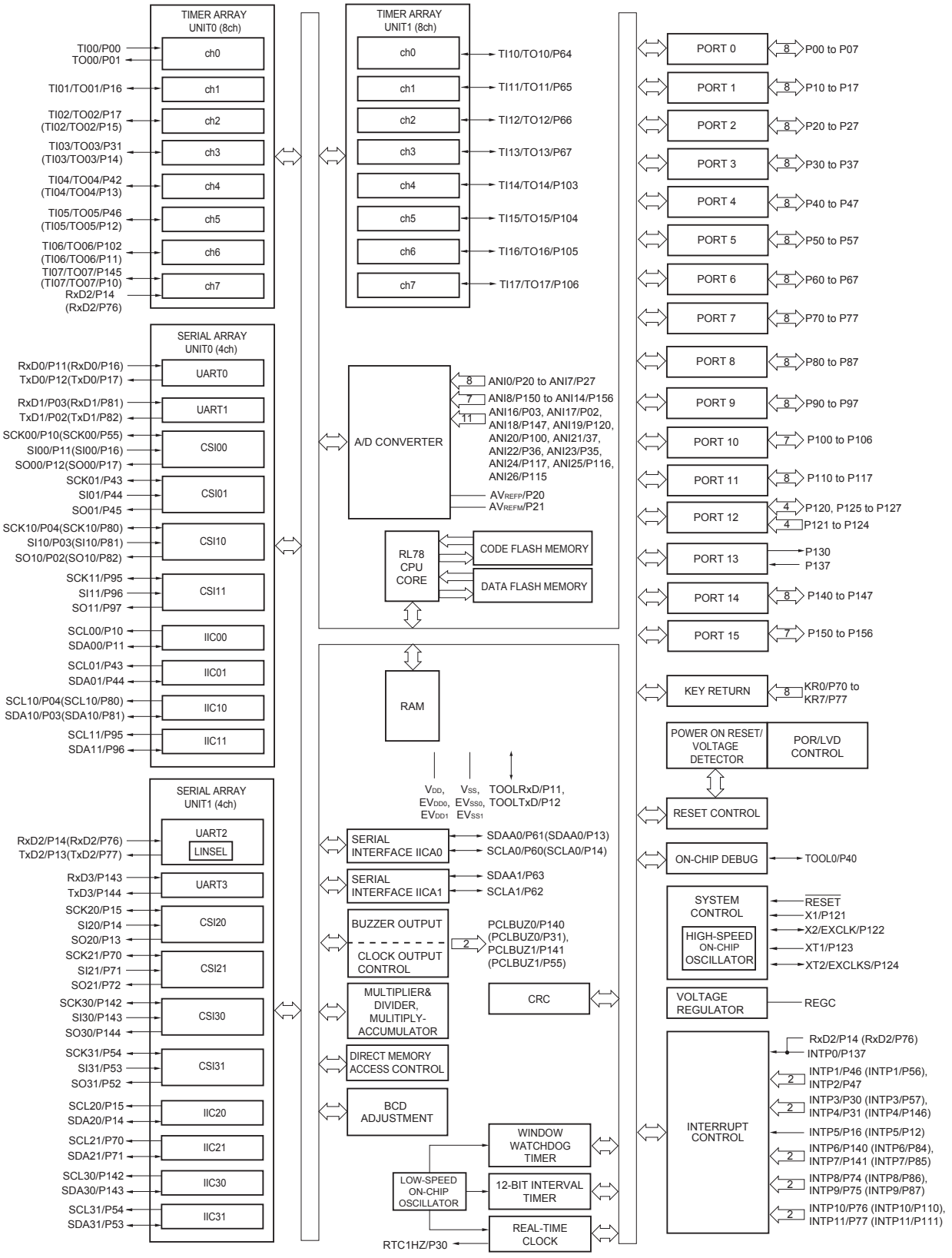

Remark Functions in parentheses in the above figure can be assigned via settings in the peripheral I/O redirection register (PIOR). Refer to **Figure 4-8 Format of Peripheral I/O Redirection Register (PIOR)** in the RL78/G13 User's Manual.

1.6 Outline of Functions

[20-pin, 24-pin, 25-pin, 30-pin, 32-pin, 36-pin products]

Caution This outline describes the functions at the time when Peripheral I/O redirection register (PIOR) is set to 00H.

(1/2)

Item		20-pin		24-pin		25-pin		30-pin		32-pin		36-pin	
		R5F1006x	R5F1016x	R5F1007x	R5F1017x	R5F1008x	R5F1018x	R5F100Ax	R5F101Ax	R5F100Bx	R5F101Bx	R5F100Cx	R5F101Cx
Code flash memory (KB)		16 to 64		16 to 64		16 to 64		16 to 128		16 to 128		16 to 128	
Data flash memory (KB)		4	–	4	–	4	–	4 to 8	–	4 to 8	–	4 to 8	–
RAM (KB)		2 to 4 Note1		2 to 4 Note1		2 to 4 Note1		2 to 12 Note1		2 to 12 Note1		2 to 12 Note1	
Address space		1 MB											
Main system clock	High-speed system clock	X1 (crystal/ceramic) oscillation, external main system clock input (EXCLK) HS (High-speed main) mode: 1 to 20 MHz (V_{DD} = 2.7 to 5.5 V), HS (High-speed main) mode: 1 to 16 MHz (V_{DD} = 2.4 to 5.5 V), LS (Low-speed main) mode: 1 to 8 MHz (V_{DD} = 1.8 to 5.5 V), LV (Low-voltage main) mode: 1 to 4 MHz (V_{DD} = 1.6 to 5.5 V)											
	High-speed on-chip oscillator	HS (High-speed main) mode: 1 to 32 MHz (V_{DD} = 2.7 to 5.5 V), HS (High-speed main) mode: 1 to 16 MHz (V_{DD} = 2.4 to 5.5 V), LS (Low-speed main) mode: 1 to 8 MHz (V_{DD} = 1.8 to 5.5 V), LV (Low-voltage main) mode: 1 to 4 MHz (V_{DD} = 1.6 to 5.5 V)											
Subsystem clock		–											
Low-speed on-chip oscillator		15 kHz (TYP.)											
General-purpose registers		(8-bit register × 8) × 4 banks											
Minimum instruction execution time		0.03125 μs (High-speed on-chip oscillator: f_{IH} = 32 MHz operation)											
		0.05 μs (High-speed system clock: f_{MX} = 20 MHz operation)											
Instruction set		• Data transfer (8/16 bits) • Adder and subtractor/logical operation (8/16 bits) • Multiplication (8 bits × 8 bits) • Rotate, barrel shift, and bit manipulation (Set, reset, test, and Boolean operation), etc.											
I/O port	Total	16		20		21		26		28		32	
	CMOS I/O	13 (N-ch O.D. I/O [V_{DD} withstand voltage]: 5)		15 (N-ch O.D. I/O [V_{DD} withstand voltage]: 6)		15 (N-ch O.D. I/O [V_{DD} withstand voltage]: 6)		21 (N-ch O.D. I/O [V_{DD} withstand voltage]: 9)		22 (N-ch O.D. I/O [V_{DD} withstand voltage]: 9)		26 (N-ch O.D. I/O [V_{DD} withstand voltage]: 10)	
	CMOS input	3		3		3		3		3		3	
	CMOS output	–		–		1		–		–		–	
	N-ch O.D. I/O (withstand voltage: 6 V)	–		2		2		2		3		3	
Timer	16-bit timer	8 channels											
	Watchdog timer	1 channel											
	Real-time clock (RTC)	1 channel Note 2											
	12-bit interval timer (IT)	1 channel											
	Timer output	3 channels (PWM outputs: 2 Note 3)		4 channels (PWM outputs: 3 Note 3)				4 channels (PWM outputs: 3 Note 3), 8 channels (PWM outputs: 7 Note 3) Note 4					
	RTC output	–											

Notes 1. The flash library uses RAM in self-programming and rewriting of the data flash memory.
The target products and start address of the RAM areas used by the flash library are shown below.
R5F100xD, R5F101xD (x = 6 to 8, A to C): Start address FF300H
R5F100xE, R5F101xE (x = 6 to 8, A to C): Start address FEF00H
For the RAM areas used by the flash library, see **Self RAM list of Flash Self-Programming Library for RL78 Family (R20UT2944)**.

2. Only the constant-period interrupt function when the low-speed on-chip oscillator clock (f_{IL}) is selected

3. The number of PWM outputs varies depending on the setting of channels in use (the number of masters and slaves) (see **6.9.3 Operation as multiple PWM output function** in the RL78/G13 User's Manual).
4. When setting to PIOR = 1

(2/2)

Item		20-pin		24-pin		25-pin		30-pin		32-pin		36-pin	
		R5F1006x	R5F1016x	R5F1007x	R5F1017x	R5F1008x	R5F1018x	R5F100Ax	R5F101Ax	R5F100Bx	R5F101Bx	R5F100Cx	R5F101Cx
Clock output/buzzer output		–		1		1		2		2		2	
		• 2.44 kHz, 4.88 kHz, 9.76 kHz, 1.25 MHz, 2.5 MHz, 5 MHz, 10 MHz (Main system clock: f_{MAIN} = 20 MHz operation)											
8/10-bit resolution A/D converter		6 channels		6 channels		6 channels		8 channels		8 channels		8 channels	
Serial interface		[20-pin, 24-pin, 25-pin products] • CSI: 1 channel/simplified I^2C: 1 channel/UART: 1 channel • CSI: 1 channel/simplified I^2C: 1 channel/UART: 1 channel [30-pin, 32-pin products] • CSI: 1 channel/simplified I^2C: 1 channel/UART: 1 channel • CSI: 1 channel/simplified I^2C: 1 channel/UART: 1 channel • CSI: 1 channel/simplified I^2C: 1 channel/UART (UART supporting LIN-bus): 1 channel [36-pin products] • CSI: 1 channel/simplified I^2C: 1 channel/UART: 1 channel • CSI: 1 channel/simplified I^2C: 1 channel/UART: 1 channel • CSI: 2 channels/simplified I^2C: 2 channels/UART (UART supporting LIN-bus): 1 channel											
	I^2C bus	–		1 channel		1 channel		1 channel		1 channel		1 channel	
Multiplier and divider/multiply-accumulator		• 16 bits × 16 bits = 32 bits (Unsigned or signed) • 32 bits ÷ 32 bits = 32 bits (Unsigned) • 16 bits × 16 bits + 32 bits = 32 bits (Unsigned or signed)											
DMA controller		2 channels											
Vectored interrupt sources	Internal	23		24		24		27		27		27	
	External	3		5		5		6		6		6	
Key interrupt		–											
Reset		• Reset by $\overline{\text{RESET}}$ pin • Internal reset by watchdog timer • Internal reset by power-on-reset • Internal reset by voltage detector • Internal reset by illegal instruction execution Note • Internal reset by RAM parity error • Internal reset by illegal-memory access											
Power-on-reset circuit		• Power-on-reset: 1.51 V (TYP.) • Power-down-reset: 1.50 V (TYP.)											
Voltage detector		• Rising edge : 1.67 V to 4.06 V (14 stages) • Falling edge : 1.63 V to 3.98 V (14 stages)											
On-chip debug function		Provided											
<R> Power supply voltage		V_{DD} = 1.6 to 5.5 V (T_A = -40 to +85°C) V_{DD} = 2.4 to 5.5 V (T_A = -40 to +105°C)											
Operating ambient temperature		T_A = 40 to +85°C (A: Consumer applications, D: Industrial applications) T_A = 40 to +105°C (G: Industrial applications)											

Note The illegal instruction is generated when instruction code FFH is executed.
Reset by the illegal instruction execution not issued by emulation with the in-circuit emulator or on-chip debug emulator.

[40-pin, 44-pin, 48-pin, 52-pin, 64-pin products]

Caution This outline describes the functions at the time when Peripheral I/O redirection register (PIOR) is set to 00H.

(1/2)

Item		40-pin		44-pin		48-pin		52-pin		64-pin	
		R5F100Ex	R5F101Ex	R5F100Fx	R5F101Fx	R5F100Gx	R5F101Gx	R5F100Jx	R5F101Jx	R5F100Lx	R5F101Lx
Code flash memory (KB)		16 to 192		16 to 512		16 to 512		32 to 512		32 to 512	
Data flash memory (KB)		4 to 8	–	4 to 8	–	4 to 8	–	4 to 8	–	4 to 8	–
RAM (KB)		2 to 16[Note1]		2 to 32[Note1]		2 to 32[Note1]		2 to 32[Note1]		2 to 32[Note1]	
Address space		1 MB									
Main system clock	High-speed system clock	X1 (crystal/ceramic) oscillation, external main system clock input (EXCLK) HS (High-speed main) mode: 1 to 20 MHz (V_{DD} = 2.7 to 5.5 V), HS (High-speed main) mode: 1 to 16 MHz (V_{DD} = 2.4 to 5.5 V), LS (Low-speed main) mode: 1 to 8 MHz (V_{DD} = 1.8 to 5.5 V), LV (Low-voltage main) mode: 1 to 4 MHz (V_{DD} = 1.6 to 5.5 V)									
	High-speed on-chip oscillator	HS (High-speed main) mode: 1 to 32 MHz (V_{DD} = 2.7 to 5.5 V), HS (High-speed main) mode: 1 to 16 MHz (V_{DD} = 2.4 to 5.5 V), LS (Low-speed main) mode: 1 to 8 MHz (V_{DD} = 1.8 to 5.5 V), LV (Low-voltage main) mode: 1 to 4 MHz (V_{DD} = 1.6 to 5.5 V)									
Subsystem clock		XT1 (crystal) oscillation, external subsystem clock input (EXCLKS) 32.768 kHz									
Low-speed on-chip oscillator		15 kHz (TYP.)									
General-purpose registers		(8-bit register × 8) × 4 banks									
Minimum instruction execution time		0.03125 μs (High-speed on-chip oscillator: f_{IH} = 32 MHz operation)									
		0.05 μs (High-speed system clock: f_{MX} = 20 MHz operation)									
		30.5 μs (Subsystem clock: f_{SUB} = 32.768 kHz operation)									
Instruction set		• Data transfer (8/16 bits) • Adder and subtractor/logical operation (8/16 bits) • Multiplication (8 bits × 8 bits) • Rotate, barrel shift, and bit manipulation (Set, reset, test, and Boolean operation), etc.									
I/O port	Total	36		40		44		48		58	
	CMOS I/O	28 (N-ch O.D. I/O [V_{DD} withstand voltage]: 10)		31 (N-ch O.D. I/O [V_{DD} withstand voltage]: 10)		34 (N-ch O.D. I/O [V_{DD} withstand voltage]: 11)		38 (N-ch O.D. I/O [V_{DD} withstand voltage]: 13)		48 (N-ch O.D. I/O [V_{DD} withstand voltage]: 15)	
	CMOS input	5		5		5		5		5	
	CMOS output	–		–		1		1		1	
	N-ch O.D. I/O (withstand voltage: 6 V)	3		4		4		4		4	
Timer	16-bit timer	8 channels									
	Watchdog timer	1 channel									
	Real-time clock (RTC)	1 channel									
	12-bit interval timer (IT)	1 channel									
	Timer output	4 channels (PWM outputs: 3[Note2], 8 channels (PWM outputs: 7[Note2])[Note3]		5 channels (PWM outputs: 4[Note2], 8 channels (PWM outputs: 7[Note2])[Note3]						8 channels (PWM outputs: 7[Note2])	
	RTC output	1 channel • 1 Hz (subsystem clock: f_{SUB} = 32.768 kHz)									

Notes 1. The flash library uses RAM in self-programming and rewriting of the data flash memory.
The target products and start address of the RAM areas used by the flash library are shown below.
R5F100xD, R5F101xD (x = E to G, J, L): Start address FF300H
R5F100xE, R5F101xE (x = E to G, J, L): Start address FEF00H
R5F100xJ, R5F101xJ (x = F, G, J, L): Start address FAF00H
R5F100xL, R5F101xL (x = F, G, J, L): Start address F7F00H
For the RAM areas used by the flash library, see **Self RAM list of Flash Self-Programming Library for RL78 Family (R20UT2944)**.

2. The number of PWM outputs varies depending on the setting of channels in use (the number of masters and slaves) (see **6.9.3 Operation as multiple PWM output function** in the RL78/G13 User's Manual).
3. When setting to PIOR = 1

(2/2)

Item		40-pin		44-pin		48-pin		52-pin		64-pin	
		R5F100Ex	R5F101Ex	R5F100Fx	R5F101Fx	R5F100Gx	R5F101Gx	R5F100Jx	R5F101Jx	R5F100Lx	R5F101Lx
Clock output/buzzer output		2		2		2		2		2	
		• 2.44 kHz, 4.88 kHz, 9.76 kHz, 1.25 MHz, 2.5 MHz, 5 MHz, 10 MHz (Main system clock: f_{MAIN} = 20 MHz operation) • 256 Hz, 512 Hz, 1.024 kHz, 2.048 kHz, 4.096 kHz, 8.192 kHz, 16.384 kHz, 32.768 kHz (Subsystem clock: f_{SUB} = 32.768 kHz operation)									
8/10-bit resolution A/D converter		9 channels		10 channels		10 channels		12 channels		12 channels	
Serial interface		[40-pin, 44-pin products] • CSI: 1 channel/simplified I^2C: 1 channel/UART: 1 channel • CSI: 1 channel/simplified I^2C: 1 channel/UART: 1 channel • CSI: 2 channels/simplified I^2C: 2 channels/UART (UART supporting LIN-bus): 1 channel [48-pin, 52-pin products] • CSI: 2 channels/simplified I^2C: 2 channels/UART: 1 channel • CSI: 1 channel/simplified I^2C: 1 channel/UART: 1 channel • CSI: 2 channels/simplified I^2C: 2 channels/UART (UART supporting LIN-bus): 1 channel [64-pin products] • CSI: 2 channels/simplified I^2C: 2 channels/UART: 1 channel • CSI: 2 channels/simplified I^2C: 2 channels/UART: 1 channel • CSI: 2 channels/simplified I^2C: 2 channels/UART (UART supporting LIN-bus): 1 channel									
	I^2C bus	1 channel		1 channel		1 channel		1 channel		1 channel	
Multiplier and divider/multiply-accumulator		• 16 bits × 16 bits = 32 bits (Unsigned or signed) • 32 bits ÷ 32 bits = 32 bits (Unsigned) • 16 bits × 16 bits + 32 bits = 32 bits (Unsigned or signed)									
DMA controller		2 channels									
Vectored interrupt sources	Internal	27		27		27		27		27	
	External	7		7		10		12		13	
Key interrupt		4		4		6		8		8	
Reset		• Reset by $\overline{\text{RESET}}$ pin • Internal reset by watchdog timer • Internal reset by power-on-reset • Internal reset by voltage detector • Internal reset by illegal instruction execution Note • Internal reset by RAM parity error • Internal reset by illegal-memory access									
Power-on-reset circuit		• Power-on-reset: 1.51 V (TYP.) • Power-down-reset: 1.50 V (TYP.)									
Voltage detector		• Rising edge : 1.67 V to 4.06 V (14 stages) • Falling edge : 1.63 V to 3.98 V (14 stages)									
On-chip debug function		Provided									
Power supply voltage		V_{DD} = 1.6 to 5.5 V (T_A = -40 to +85°C) V_{DD} = 2.4 to 5.5 V (T_A = -40 to +105°C)									
<R> Operating ambient temperature		T_A = 40 to +85°C (A: Consumer applications, D: Industrial applications) T_A = 40 to +105°C (G: Industrial applications)									

Note The illegal instruction is generated when instruction code FFH is executed.
Reset by the illegal instruction execution not issued by emulation with the in-circuit emulator or on-chip debug emulator.

[80-pin, 100-pin, 128-pin products]

Caution This outline describes the functions at the time when Peripheral I/O redirection register (PIOR) is set to 00H.

(1/2)

Item		80-pin		100-pin		128-pin	
		R5F100Mx	R5F101Mx	R5F100Px	R5F101Px	R5F100Sx	R5F101Sx
Code flash memory (KB)		96 to 512		96 to 512		192 to 512	
Data flash memory (KB)		8	–	8	–	8	–
RAM (KB)		8 to 32 Note 1		8 to 32 Note 1		16 to 32 Note 1	
Address space		1 MB					
Main system clock	High-speed system clock	X1 (crystal/ceramic) oscillation, external main system clock input (EXCLK) HS (High-speed main) mode: 1 to 20 MHz (V_{DD} = 2.7 to 5.5 V), HS (High-speed main) mode: 1 to 16 MHz (V_{DD} = 2.4 to 5.5 V), LS (Low-speed main) mode: 1 to 8 MHz (V_{DD} = 1.8 to 5.5 V), LV (Low-voltage main) mode: 1 to 4 MHz (V_{DD} = 1.6 to 5.5 V)					
	High-speed on-chip oscillator	HS (High-speed main) mode: 1 to 32 MHz (V_{DD} = 2.7 to 5.5 V), HS (High-speed main) mode: 1 to 16 MHz (V_{DD} = 2.4 to 5.5 V), LS (Low-speed main) mode: 1 to 8 MHz (V_{DD} = 1.8 to 5.5 V), LV (Low-voltage main) mode: 1 to 4 MHz (V_{DD} = 1.6 to 5.5 V)					
Subsystem clock		XT1 (crystal) oscillation, external subsystem clock input (EXCLKS) 32.768 kHz					
Low-speed on-chip oscillator		15 kHz (TYP.)					
General-purpose register		(8-bit register × 8) × 4 banks					
Minimum instruction execution time		0.03125 μs (High-speed on-chip oscillator: f_{IH} = 32 MHz operation)					
		0.05 μs (High-speed system clock: f_{MX} = 20 MHz operation)					
		30.5 μs (Subsystem clock: f_{SUB} = 32.768 kHz operation)					
Instruction set		• Data transfer (8/16 bits) • Adder and subtractor/logical operation (8/16 bits) • Multiplication (8 bits × 8 bits) • Rotate, barrel shift, and bit manipulation (Set, reset, test, and Boolean operation), etc.					
I/O port	Total	74		92		120	
	CMOS I/O	64 (N-ch O.D. I/O [EV_{DD} withstand voltage]: 21)		82 (N-ch O.D. I/O [EV_{DD} withstand voltage]: 24)		110 (N-ch O.D. I/O [EV_{DD} withstand voltage]: 25)	
	CMOS input	5		5		5	
	CMOS output	1		1		1	
	N-ch O.D. I/O (withstand voltage: 6 V)	4		4		4	
Timer	16-bit timer	12 channels		12 channels		16 channels	
	Watchdog timer	1 channel		1 channel		1 channel	
	Real-time clock (RTC)	1 channel		1 channel		1 channel	
	12-bit interval timer (IT)	1 channel		1 channel		1 channel	
	Timer output	12 channels (PWM outputs: 10 Note 2)		12 channels (PWM outputs: 10 Note 2)		16 channels (PWM outputs: 14 Note 2)	
	RTC output	1 channel • 1 Hz (subsystem clock: f_{SUB} = 32.768 kHz)					

Notes 1. The flash library uses RAM in self-programming and rewriting of the data flash memory.

The target products and start address of the RAM areas used by the flash library are shown below.

R5F100xJ, R5F101xJ (x = M, P): Start address FAF00H

R5F100xL, R5F101xL (x = M, P, S): Start address F7F00H

For the RAM areas used by the flash library, see **Self RAM list of Flash Self-Programming Library for RL78 Family (R20UT2944)**.

2. The number of PWM outputs varies depending on the setting of channels in use (the number of masters and slaves) (see **6.9.3 Operation as multiple PWM output function** in the RL78/G13 User's Manual).

(2/2)

Item		80-pin		100-pin		128-pin	
		R5F100Mx	R5F101Mx	R5F100Px	R5F101Px	R5F100Sx	R5F101Sx
Clock output/buzzer output		2		2		2	
		• 2.44 kHz, 4.88 kHz, 9.76 kHz, 1.25 MHz, 2.5 MHz, 5 MHz, 10 MHz (Main system clock: f_{MAIN} = 20 MHz operation) • 256 Hz, 512 Hz, 1.024 kHz, 2.048 kHz, 4.096 kHz, 8.192 kHz, 16.384 kHz, 32.768 kHz (Subsystem clock: f_{SUB} = 32.768 kHz operation)					
8/10-bit resolution A/D converter		17 channels		20 channels		26 channels	
Serial interface		[80-pin, 100-pin, 128-pin products] • CSI: 2 channels/simplified I^2C: 2 channels/UART: 1 channel • CSI: 2 channels/simplified I^2C: 2 channels/UART: 1 channel • CSI: 2 channels/simplified I^2C: 2 channels/UART (UART supporting LIN-bus): 1 channel • CSI: 2 channels/simplified I^2C: 2 channels/UART: 1 channel					
	I^2C bus	2 channels		2 channels		2 channels	
Multiplier and divider/multiply-accumulator		• 16 bits × 16 bits = 32 bits (Unsigned or signed) • 32 bits ÷ 32 bits = 32 bits (Unsigned) • 16 bits × 16 bits + 32 bits = 32 bits (Unsigned or signed)					
DMA controller		4 channels					
Vectored interrupt sources	Internal	37		37		41	
	External	13		13		13	
Key interrupt		8		8		8	
Reset		• Reset by $\overline{\text{RESET}}$ pin • Internal reset by watchdog timer • Internal reset by power-on-reset • Internal reset by voltage detector • Internal reset by illegal instruction execution Note • Internal reset by RAM parity error • Internal reset by illegal-memory access					
Power-on-reset circuit		• Power-on-reset: 1.51 V (TYP.) • Power-down-reset: 1.50 V (TYP.)					
Voltage detector		• Rising edge : 1.67 V to 4.06 V (14 stages) • Falling edge : 1.63 V to 3.98 V (14 stages)					
On-chip debug function		Provided					
Power supply voltage		V_{DD} = 1.6 to 5.5 V (T_A = -40 to +85°C) V_{DD} = 2.4 to 5.5 V (T_A = -40 to +105°C)					
<R> Operating ambient temperature		T_A = 40 to +85°C (A: Consumer applications, D: Industrial applications) T_A = 40 to +105°C (G: Industrial applications)					

Note The illegal instruction is generated when instruction code FFH is executed.
Reset by the illegal instruction execution not issued by emulation with the in-circuit emulator or on-chip debug emulator.

2. ELECTRICAL SPECIFICATIONS (T_A = -40 to +85°C)

This chapter describes the following electrical specifications.

Target products A: Consumer applications T_A = −40 to +85°C

R5F100xxAxx, R5F101xxAxx

D: Industrial applications T_A = −40 to +85°C

R5F100xxDxx, R5F101xxDxx

G: Industrial applications when T_A = −40 to +105°C products is used in the range of T_A = −40 to +85°C

R5F100xxGxx

Cautions 1. The RL78 microcontrollers have an on-chip debug function, which is provided for development and evaluation. Do not use the on-chip debug function in products designated for mass production, because the guaranteed number of rewritable times of the flash memory may be exceeded when this function is used, and product reliability therefore cannot be guaranteed. Renesas Electronics is not liable for problems occurring when the on-chip debug function is used.

2. With products not provided with an EV_{DD0}, EV_{DD1}, EV_{SS0}, or EV_{SS1} pin, replace EV_{DD0} and EV_{DD1} with V_{DD}, or replace EV_{SS0} and EV_{SS1} with V_{SS}.

3. The pins mounted depend on the product. Refer to 2.1 Port Function to 2.2.1 Functions for each product.

2.1 Absolute Maximum Ratings

Absolute Maximum Ratings (T_A = 25°C) (1/2)

Parameter	Symbols	Conditions	Ratings	Unit
Supply voltage	V_{DD}		−0.5 to +6.5	V
	EV_{DD0}, EV_{DD1}	EV_{DD0} = EV_{DD1}	−0.5 to +6.5	V
	EV_{SS0}, EV_{SS1}	EV_{SS0} = EV_{SS1}	−0.5 to +0.3	V
REGC pin input voltage	V_{IREGC}	REGC	−0.3 to +2.8 and −0.3 to V_{DD} +0.3 Note 1	V
Input voltage	V_{I1}	P00 to P07, P10 to P17, P30 to P37, P40 to P47, P50 to P57, P64 to P67, P70 to P77, P80 to P87, P90 to P97, P100 to P106, P110 to P117, P120, P125 to P127, P140 to P147	−0.3 to EV_{DD0} +0.3 and −0.3 to V_{DD} +0.3 Note 2	V
	V_{I2}	P60 to P63 (N-ch open-drain)	−0.3 to +6.5	V
	V_{I3}	P20 to P27, P121 to P124, P137, P150 to P156, EXCLK, EXCLKS, $\overline{\text{RESET}}$	−0.3 to V_{DD} +0.3 Note 2	V
Output voltage	V_{O1}	P00 to P07, P10 to P17, P30 to P37, P40 to P47, P50 to P57, P60 to P67, P70 to P77, P80 to P87, P90 to P97, P100 to P106, P110 to P117, P120, P125 to P127, P130, P140 to P147	−0.3 to EV_{DD0} +0.3 and −0.3 to V_{DD} +0.3 Note 2	V
	V_{O2}	P20 to P27, P150 to P156	−0.3 to V_{DD} +0.3 Note 2	V
Analog input voltage	V_{AI1}	ANI16 to ANI26	−0.3 to EV_{DD0} +0.3 and −0.3 to AV_{REF}(+) +0.3 Notes 2, 3	V
	V_{AI2}	ANI0 to ANI14	−0.3 to V_{DD} +0.3 and −0.3 to AV_{REF}(+) +0.3 Notes 2, 3	V

Notes 1. Connect the REGC pin to Vss via a capacitor (0.47 to 1 μF). This value regulates the absolute maximum rating of the REGC pin. Do not use this pin with voltage applied to it.

2. Must be 6.5 V or lower.

3. Do not exceed AV_{REF}(+) + 0.3 V in case of A/D conversion target pin.

Caution Product quality may suffer if the absolute maximum rating is exceeded even momentarily for any parameter. That is, the absolute maximum ratings are rated values at which the product is on the verge of suffering physical damage, and therefore the product must be used under conditions that ensure that the absolute maximum ratings are not exceeded.

Remarks 1. Unless specified otherwise, the characteristics of alternate-function pins are the same as those of the port pins.

2. AV_{REF}(+) : + side reference voltage of the A/D converter.

3. V_{SS} : Reference voltage

Absolute Maximum Ratings (T_A = 25°C) (2/2)

Parameter	Symbols	Conditions		Ratings	Unit
Output current, high	I_{OH1}	Per pin	P00 to P07, P10 to P17, P30 to P37, P40 to P47, P50 to P57, P64 to P67, P70 to P77, P80 to P87, P90 to P97, P100 to P106, P110 to P117, P120, P125 to P127, P130, P140 to P147	−40	mA
		Total of all pins −170 mA	P00 to P04, P07, P32 to P37, P40 to P47, P102 to P106, P120, P125 to P127, P130, P140 to P145	−70	mA
			P05, P06, P10 to P17, P30, P31, P50 to P57, P64 to P67, P70 to P77, P80 to P87, P90 to P97, P100, P101, P110 to P117, P146, P147	−100	mA
	I_{OH2}	Per pin	P20 to P27, P150 to P156	−0.5	mA
		Total of all pins		−2	mA
Output current, low	I_{OL1}	Per pin	P00 to P07, P10 to P17, P30 to P37, P40 to P47, P50 to P57, P60 to P67, P70 to P77, P80 to P87, P90 to P97, P100 to P106, P110 to P117, P120, P125 to P127, P130, P140 to P147	40	mA
		Total of all pins 170 mA	P00 to P04, P07, P32 to P37, P40 to P47, P102 to P106, P120, P125 to P127, P130, P140 to P145	70	mA
			P05, P06, P10 to P17, P30, P31, P50 to P57, P60 to P67, P70 to P77, P80 to P87, P90 to P97, P100, P101, P110 to P117, P146, P147	100	mA
	I_{OL2}	Per pin	P20 to P27, P150 to P156	1	mA
		Total of all pins		5	mA
Operating ambient temperature	T_A	In normal operation mode		−40 to +85	°C
		In flash memory programming mode			
Storage temperature	T_{stg}			−65 to +150	°C

Caution Product quality may suffer if the absolute maximum rating is exceeded even momentarily for any parameter. That is, the absolute maximum ratings are rated values at which the product is on the verge of suffering physical damage, and therefore the product must be used under conditions that ensure that the absolute maximum ratings are not exceeded.

Remark Unless specified otherwise, the characteristics of alternate-function pins are the same as those of the port pins.

2.2 Oscillator Characteristics

2.2.1 X1, XT1 oscillator characteristics

(T_A = −40 to +85°C, 1.6 V ≤ V_{DD} ≤ 5.5 V, V_{SS} = 0 V)

Parameter	Resonator	Conditions	MIN.	TYP.	MAX.	Unit
X1 clock oscillation frequency (f_X)Note	Ceramic resonator/ crystal resonator	2.7 V ≤ V_{DD} ≤ 5.5 V	1.0		20.0	MHz
		2.4 V ≤ V_{DD} < 2.7 V	1.0		16.0	MHz
		1.8 V ≤ V_{DD} < 2.4 V	1.0		8.0	MHz
		1.6 V ≤ V_{DD} < 1.8 V	1.0		4.0	MHz
XT1 clock oscillation frequency (f_X)Note	Crystal resonator		32	32.768	35	kHz

Note Indicates only permissible oscillator frequency ranges. Refer to AC Characteristics for instruction execution time. Request evaluation by the manufacturer of the oscillator circuit mounted on a board to check the oscillator characteristics.

Caution Since the CPU is started by the high-speed on-chip oscillator clock after a reset release, check the X1 clock oscillation stabilization time using the oscillation stabilization time counter status register (OSTC) by the user. Determine the oscillation stabilization time of the OSTC register and the oscillation stabilization time select register (OSTS) after sufficiently evaluating the oscillation stabilization time with the resonator to be used.

Remark When using the X1 oscillator and XT1 oscillator, refer to **5.4 System Clock Oscillator**.

2.2.2 On-chip oscillator characteristics

(T_A = −40 to +85°C, 1.6 V ≤ V_{DD} ≤ 5.5 V, V_{SS} = 0 V)

Oscillators	Parameters	Conditions		MIN.	TYP.	MAX.	Unit
High-speed on-chip oscillator clock frequencyNotes 1, 2	f_{IH}			1		32	MHz
High-speed on-chip oscillator clock frequency accuracy		−20 to +85 °C	1.8 V ≤ V_{DD} ≤ 5.5 V	−1.0		+1.0	%
			1.6 V ≤ V_{DD} < 1.8 V	−5.0		+5.0	%
		−40 to −20 °C	1.8 V ≤ V_{DD} ≤ 5.5 V	−1.5		+1.5	%
			1.6 V ≤ V_{DD} < 1.8 V	−5.5		+5.5	%
Low-speed on-chip oscillator clock frequency	f_{IL}				15		kHz
Low-speed on-chip oscillator clock frequency accuracy				−15		+15	%

Notes 1. High-speed on-chip oscillator frequency is selected by bits 0 to 3 of option byte (000C2H/010C2H) and bits 0 to 2 of HOCODIV register.

2. This indicates the oscillator characteristics only. Refer to AC Characteristics for instruction execution time.

2.3 DC Characteristics

2.3.1 Pin characteristics

(T_A = −40 to +85°C, 1.6 V ≤ EV_{DD0} = EV_{DD1} ≤ V_{DD} ≤ 5.5 V, V_{SS} = EV_{SS0} = EV_{SS1} = 0 V) (1/5)

Items	Symbol	Conditions		MIN.	TYP.	MAX.	Unit
Output current, high Note 1	I_{OH1}	Per pin for P00 to P07, P10 to P17, P30 to P37, P40 to P47, P50 to P57, P64 to P67, P70 to P77, P80 to P87, P90 to P97, P100 to P106, P110 to P117, P120, P125 to P127, P130, P140 to P147	1.6 V ≤ EV_{DD0} ≤ 5.5 V			−10.0 Note 2	mA
		Total of P00 to P04, P07, P32 to P37, P40 to P47, P102 to P106, P120, P125 to P127, P130, P140 to P145 (When duty ≤ 70% Note 3)	4.0 V ≤ EV_{DD0} ≤ 5.5 V			−55.0	mA
			2.7 V ≤ EV_{DD0} < 4.0 V			−10.0	mA
			1.8 V ≤ EV_{DD0} < 2.7 V			−5.0	mA
			1.6 V ≤ EV_{DD0} < 1.8 V			−2.5	mA
		Total of P05, P06, P10 to P17, P30, P31, P50 to P57, P64 to P67, P70 to P77, P80 to P87, P90 to P97, P100, P101, P110 to P117, P146, P147 (When duty ≤ 70% Note 3)	4.0 V ≤ EV_{DD0} ≤ 5.5 V			−80.0	mA
			2.7 V ≤ EV_{DD0} < 4.0 V			−19.0	mA
			1.8 V ≤ EV_{DD0} < 2.7 V			−10.0	mA
			1.6 V ≤ EV_{DD0} < 1.8 V			−5.0	mA
		Total of all pins (When duty ≤ 70% Note 3)	1.6 V ≤ EV_{DD0} ≤ 5.5 V			−135.0 Note 4	mA
	I_{OH2}	Per pin for P20 to P27, P150 to P156	1.6 V ≤ V_{DD} ≤ 5.5 V			−0.1 Note 2	mA
		Total of all pins (When duty ≤ 70% Note 3)	1.6 V ≤ V_{DD} ≤ 5.5 V			−1.5	mA

Notes 1. Value of current at which the device operation is guaranteed even if the current flows from the EV_{DD0}, EV_{DD1}, V_{DD} pins to an output pin.

2. However, do not exceed the total current value.

3. Specification under conditions where the duty factor ≤ 70%.
The output current value that has changed to the duty factor > 70% the duty ratio can be calculated with the following expression (when changing the duty factor from 70% to n%).

- Total output current of pins = (I_{OH} × 0.7)/(n × 0.01)

<Example> Where n = 80% and I_{OH} = −10.0 mA

Total output current of pins = (−10.0 × 0.7)/(80 × 0.01) ≅ −8.7 mA

However, the current that is allowed to flow into one pin does not vary depending on the duty factor. A current higher than the absolute maximum rating must not flow into one pin.

4. The applied current for the products for industrial application (R5F100xxDxx, R5F101xxDxx, R5F100xxGxx) is −100 mA.

Caution P00, P02 to P04, P10 to P15, P17, P43 to P45, P50, P52 to P55, P71, P74, P80 to P82, P96, and P142 to P144 do not output high level in N-ch open-drain mode.

Remark Unless specified otherwise, the characteristics of alternate-function pins are the same as those of the port pins.

(T_A = –40 to +85°C, 1.6 V ≤ EV_{DD0} = EV_{DD1} ≤ V_{DD} ≤ 5.5 V, V_{SS} = EV_{SS0} = EV_{SS1} = 0 V) (2/5)

Items	Symbol	Conditions		MIN.	TYP.	MAX.	Unit
Output current, low Note 1	I_{OL1}	Per pin for P00 to P07, P10 to P17, P30 to P37, P40 to P47, P50 to P57, P64 to P67, P70 to P77, P80 to P87, P90 to P97, P100 to P106, P110 to P117, P120, P125 to P127, P130, P140 to P147				20.0 Note 2	mA
		Per pin for P60 to P63				15.0 Note 2	mA
		Total of P00 to P04, P07, P32 to P37, P40 to P47, P102 to P106, P120, P125 to P127, P130, P140 to P145 (When duty ≤ 70% Note 3)	4.0 V ≤ EV_{DD0} ≤ 5.5 V			70.0	mA
			2.7 V ≤ EV_{DD0} < 4.0 V			15.0	mA
			1.8 V ≤ EV_{DD0} < 2.7 V			9.0	mA
			1.6 V ≤ EV_{DD0} < 1.8 V			4.5	mA
		Total of P05, P06, P10 to P17, P30, P31, P50 to P57, P60 to P67, P70 to P77, P80 to P87, P90 to P97, P100, P101, P110 to P117, P146, P147 (When duty ≤ 70% Note 3)	4.0 V ≤ EV_{DD0} ≤ 5.5 V			80.0	mA
			2.7 V ≤ EV_{DD0} < 4.0 V			35.0	mA
			1.8 V ≤ EV_{DD0} < 2.7 V			20.0	mA
			1.6 V ≤ EV_{DD0} < 1.8 V			10.0	mA
		Total of all pins (When duty ≤ 70% Note 3)				150.0	mA
	I_{OL2}	Per pin for P20 to P27, P150 to P156				0.4 Note 2	mA
		Total of all pins (When duty ≤ 70% Note 3)	1.6 V ≤ V_{DD} ≤ 5.5 V			5.0	mA

Notes 1. Value of current at which the device operation is guaranteed even if the current flows from an output pin to the EV_{SS0}, EV_{SS1} and V_{SS} pin.

2. However, do not exceed the total current value.

3. Specification under conditions where the duty factor ≤ 70%.
The output current value that has changed to the duty factor > 70% the duty ratio can be calculated with the following expression (when changing the duty factor from 70% to n%).

- Total output current of pins = (I_{OL} × 0.7)/(n × 0.01)

<Example> Where n = 80% and I_{OL} = 10.0 mA

Total output current of pins = (10.0 × 0.7)/(80 × 0.01) ≅ 8.7 mA

However, the current that is allowed to flow into one pin does not vary depending on the duty factor. A current higher than the absolute maximum rating must not flow into one pin.

Remark Unless specified otherwise, the characteristics of alternate-function pins are the same as those of the port pins.

(T_A = –40 to +85°C, 1.6 V ≤ EV_{DD0} = EV_{DD1} ≤ V_{DD} ≤ 5.5 V, V_{SS} = EV_{SS0} = EV_{SS1} = 0 V) (3/5)

Items	Symbol	Conditions		MIN.	TYP.	MAX.	Unit
Input voltage, high	V_{IH1}	P00 to P07, P10 to P17, P30 to P37, P40 to P47, P50 to P57, P64 to P67, P70 to P77, P80 to P87, P90 to P97, P100 to P106, P110 to P117, P120, P125 to P127, P140 to P147	Normal input buffer	0.8EV_{DD0}		EV_{DD0}	V
	V_{IH2}	P01, P03, P04, P10, P11, P13 to P17, P43, P44, P53 to P55, P80, P81, P142, P143	TTL input buffer 4.0 V ≤ EV_{DD0} ≤ 5.5 V	2.2		EV_{DD0}	V
			TTL input buffer 3.3 V ≤ EV_{DD0} < 4.0 V	2.0		EV_{DD0}	V
			TTL input buffer 1.6 V ≤ EV_{DD0} < 3.3 V	1.5		EV_{DD0}	V
	V_{IH3}	P20 to P27, P150 to P156		0.7V_{DD}		V_{DD}	V
	V_{IH4}	P60 to P63		0.7EV_{DD0}		6.0	V
	V_{IH5}	P121 to P124, P137, EXCLK, EXCLKS, $\overline{\text{RESET}}$		0.8V_{DD}		V_{DD}	V
Input voltage, low	V_{IL1}	P00 to P07, P10 to P17, P30 to P37, P40 to P47, P50 to P57, P64 to P67, P70 to P77, P80 to P87, P90 to P97, P100 to P106, P110 to P117, P120, P125 to P127, P140 to P147	Normal input buffer	0		0.2EV_{DD0}	V
	V_{IL2}	P01, P03, P04, P10, P11, P13 to P17, P43, P44, P53 to P55, P80, P81, P142, P143	TTL input buffer 4.0 V ≤ EV_{DD0} ≤ 5.5 V	0		0.8	V
			TTL input buffer 3.3 V ≤ EV_{DD0} < 4.0 V	0		0.5	V
			TTL input buffer 1.6 V ≤ EV_{DD0} < 3.3 V	0		0.32	V
	V_{IL3}	P20 to P27, P150 to P156		0		0.3V_{DD}	V
	V_{IL4}	P60 to P63		0		0.3EV_{DD0}	V
	V_{IL5}	P121 to P124, P137, EXCLK, EXCLKS, $\overline{\text{RESET}}$		0		0.2V_{DD}	V

Caution The maximum value of V_{IH} of pins P00, P02 to P04, P10 to P15, P17, P43 to P45, P50, P52 to P55, P71, P74, P80 to P82, P96, and P142 to P144 is EV_{DD0}, even in the N-ch open-drain mode.

Remark Unless specified otherwise, the characteristics of alternate-function pins are the same as those of the port pins.

(T_A = –40 to +85°C, 1.6 V ≤ EV_{DD0} = EV_{DD1} ≤ V_{DD} ≤ 5.5 V, V_{SS} = EV_{SS0} = EV_{SS1} = 0 V) (4/5)

Items	Symbol	Conditions		MIN.	TYP.	MAX.	Unit
Output voltage, high	V_{OH1}	P00 to P07, P10 to P17, P30 to P37, P40 to P47, P50 to P57, P64 to P67, P70 to P77, P80 to P87, P90 to P97, P100 to P106, P110 to P117, P120, P125 to P127, P130, P140 to P147	4.0 V ≤ EV_{DD0} ≤ 5.5 V, I_{OH1} = –10.0 mA	EV_{DD0} – 1.5			V
			4.0 V ≤ EV_{DD0} ≤ 5.5 V, I_{OH1} = –3.0 mA	EV_{DD0} – 0.7			V
			2.7 V ≤ EV_{DD0} ≤ 5.5 V, I_{OH1} = –2.0 mA	EV_{DD0} – 0.6			V
			1.8 V ≤ EV_{DD0} ≤ 5.5 V, I_{OH1} = –1.5 mA	EV_{DD0} – 0.5			V
			1.6 V ≤ EV_{DD0} < 5.5 V, I_{OH1} = –1.0 mA	EV_{DD0} – 0.5			V
	V_{OH2}	P20 to P27, P150 to P156	1.6 V ≤ V_{DD} ≤ 5.5 V, I_{OH2} = –100 μA	V_{DD} – 0.5			V
Output voltage, low	V_{OL1}	P00 to P07, P10 to P17, P30 to P37, P40 to P47, P50 to P57, P64 to P67, P70 to P77, P80 to P87, P90 to P97, P100 to P106, P110 to P117, P120, P125 to P127, P130, P140 to P147	4.0 V ≤ EV_{DD0} ≤ 5.5 V, I_{OL1} = 20 mA			1.3	V
			4.0 V ≤ EV_{DD0} ≤ 5.5 V, I_{OL1} = 8.5 mA			0.7	V
			2.7 V ≤ EV_{DD0} ≤ 5.5 V, I_{OL1} = 3.0 mA			0.6	V
			2.7 V ≤ EV_{DD0} ≤ 5.5 V, I_{OL1} = 1.5 mA			0.4	V
			1.8 V ≤ EV_{DD0} ≤ 5.5 V, I_{OL1} = 0.6 mA			0.4	V
			1.6 V ≤ EV_{DD0} < 5.5 V, I_{OL1} = 0.3 mA			0.4	V
	V_{OL2}	P20 to P27, P150 to P156	1.6 V ≤ V_{DD} ≤ 5.5 V, I_{OL2} = 400 μA			0.4	V
	V_{OL3}	P60 to P63	4.0 V ≤ EV_{DD0} ≤ 5.5 V, I_{OL3} = 15.0 mA			2.0	V
			4.0 V ≤ EV_{DD0} ≤ 5.5 V, I_{OL3} = 5.0 mA			0.4	V
			2.7 V ≤ EV_{DD0} ≤ 5.5 V, I_{OL3} = 3.0 mA			0.4	V
			1.8 V ≤ EV_{DD0} ≤ 5.5 V, I_{OL3} = 2.0 mA			0.4	V
			1.6 V ≤ EV_{DD0} < 5.5 V, I_{OL3} = 1.0 mA			0.4	V

Caution P00, P02 to P04, P10 to P15, P17, P43 to P45, P50, P52 to P55, P71, P74, P80 to P82, P96, and P142 to P144 do not output high level in N-ch open-drain mode.

Remark Unless specified otherwise, the characteristics of alternate-function pins are the same as those of the port pins.

(T_A = –40 to +85°C, 1.6 V ≤ EV_{DD0} = EV_{DD1} ≤ V_{DD} ≤ 5.5 V, V_{SS} = EV_{SS0} = EV_{SS1} = 0 V) (5/5)

Items	Symbol	Conditions			MIN.	TYP.	MAX.	Unit
Input leakage current, high	I_{LIH1}	P00 to P07, P10 to P17, P30 to P37, P40 to P47, P50 to P57, P60 to P67, P70 to P77, P80 to P87, P90 to P97, P100 to P106, P110 to P117, P120, P125 to P127, P140 to P147	V_I = EV_{DD0}				1	μA
	I_{LIH2}	P20 to P27, P137, P150 to P156, $\overline{RESET}$	V_I = V_{DD}				1	μA
	I_{LIH3}	P121 to P124 (X1, X2, XT1, XT2, EXCLK, EXCLKS)	V_I = V_{DD}	In input port or external clock input			1	μA
				In resonator connection			10	μA
Input leakage current, low	I_{LIL1}	P00 to P07, P10 to P17, P30 to P37, P40 to P47, P50 to P57, P60 to P67, P70 to P77, P80 to P87, P90 to P97, P100 to P106, P110 to P117, P120, P125 to P127, P140 to P147	V_I = EV_{SS0}				–1	μA
	I_{LIL2}	P20 to P27, P137, P150 to P156, $\overline{RESET}$	V_I = V_{SS}				–1	μA
	I_{LIL3}	P121 to P124 (X1, X2, XT1, XT2, EXCLK, EXCLKS)	V_I = V_{SS}	In input port or external clock input			–1	μA
				In resonator connection			–10	μA
On-chip pll-up resistance	R_U	P00 to P07, P10 to P17, P30 to P37, P40 to P47, P50 to P57, P64 to P67, P70 to P77, P80 to P87, P90 to P97, P100 to P106, P110 to P117, P120, P125 to P127, P140 to P147	V_I = EV_{SS0}, In input port		10	20	100	kΩ

Remark Unless specified otherwise, the characteristics of alternate-function pins are the same as those of the port pins.

2.3.2 Supply current characteristics

(1) Flash ROM: 16 to 64 KB of 20- to 64-pin products

(T_A = –40 to +85°C, 1.6 V ≤ EV_{DD0} ≤ V_{DD} ≤ 5.5 V, V_{SS} = EV_{SS0} = 0 V) (1/2)

Parameter	Symbol	Conditions					MIN.	TYP.	MAX.	Unit
Supply current Note 1	I_{DD1}	Operating mode	HS (high-speed main) mode Note 5	f_{IH} = 32 MHz Note 3	Basic operation	V_{DD} = 5.0 V		2.1		mA
						V_{DD} = 3.0 V		2.1		mA
					Normal operation	V_{DD} = 5.0 V		4.6	7.0	mA
						V_{DD} = 3.0 V		4.6	7.0	mA
				f_{IH} = 24 MHz Note 3	Normal operation	V_{DD} = 5.0 V		3.7	5.5	mA
						V_{DD} = 3.0 V		3.7	5.5	mA
				f_{IH} = 16 MHz Note 3	Normal operation	V_{DD} = 5.0 V		2.7	4.0	mA
						V_{DD} = 3.0 V		2.7	4.0	mA
			LS (low-speed main) mode Note 5	f_{IH} = 8 MHz Note 3	Normal operation	V_{DD} = 3.0 V		1.2	1.8	mA
						V_{DD} = 2.0 V		1.2	1.8	mA
			LV (low-voltage main) mode Note 5	f_{IH} = 4 MHz Note 3	Normal operation	V_{DD} = 3.0 V		1.2	1.7	mA
						V_{DD} = 2.0 V		1.2	1.7	mA
			HS (high-speed main) mode Note 5	f_{MX} = 20 MHz Note 2, V_{DD} = 5.0 V	Normal operation	Square wave input		3.0	4.6	mA
						Resonator connection		3.2	4.8	mA
				f_{MX} = 20 MHz Note 2, V_{DD} = 3.0 V	Normal operation	Square wave input		3.0	4.6	mA
						Resonator connection		3.2	4.8	mA
				f_{MX} = 10 MHz Note 2, V_{DD} = 5.0 V	Normal operation	Square wave input		1.9	2.7	mA
						Resonator connection		1.9	2.7	mA
				f_{MX} = 10 MHz Note 2, V_{DD} = 3.0 V	Normal operation	Square wave input		1.9	2.7	mA
						Resonator connection		1.9	2.7	mA
			LS (low-speed main) mode Note 5	f_{MX} = 8 MHz Note 2, V_{DD} = 3.0 V	Normal operation	Square wave input		1.1	1.7	mA
						Resonator connection		1.1	1.7	mA
				f_{MX} = 8 MHz Note 2, V_{DD} = 2.0 V	Normal operation	Square wave input		1.1	1.7	mA
						Resonator connection		1.1	1.7	mA
			Subsystem clock operation	f_{SUB} = 32.768 kHz Note 4 T_A = –40°C	Normal operation	Square wave input		4.1	4.9	μA
						Resonator connection		4.2	5.0	μA
				f_{SUB} = 32.768 kHz Note 4 T_A = +25°C	Normal operation	Square wave input		4.1	4.9	μA
						Resonator connection		4.2	5.0	μA
				f_{SUB} = 32.768 kHz Note 4 T_A = +50°C	Normal operation	Square wave input		4.2	5.5	μA
						Resonator connection		4.3	5.6	μA
				f_{SUB} = 32.768 kHz Note 4 T_A = +70°C	Normal operation	Square wave input		4.3	6.3	μA
						Resonator connection		4.4	6.4	μA
				f_{SUB} = 32.768 kHz Note 4 T_A = +85°C	Normal operation	Square wave input		4.6	7.7	μA
						Resonator connection		4.7	7.8	μA

(**Notes** and **Remarks** are listed on the next page.)

Notes 1. Total current flowing into V_{DD} and EV_{DD0}, including the input leakage current flowing when the level of the input pin is fixed to V_{DD}, EV_{DD0} or V_{SS}, EV_{SS0}. The values below the MAX. column include the peripheral operation current. However, not including the current flowing into the A/D converter, LVD circuit, I/O port, and on-chip pull-up/pull-down resistors and the current flowing during data flash rewrite.

2. When high-speed on-chip oscillator and subsystem clock are stopped.

3. When high-speed system clock and subsystem clock are stopped.

4. When high-speed on-chip oscillator and high-speed system clock are stopped. When AMPHS1 = 1 (Ultra-low power consumption oscillation). However, not including the current flowing into the RTC, 12-bit interval timer, and watchdog timer.

5. Relationship between operation voltage width, operation frequency of CPU and operation mode is as below.

HS (high-speed main) mode: 2.7 V ≤ V_{DD} ≤ 5.5 V@1 MHz to 32 MHz
2.4 V ≤ V_{DD} ≤ 5.5 V@1 MHz to 16 MHz
LS (low-speed main) mode: 1.8 V ≤ V_{DD} ≤ 5.5 V@1 MHz to 8 MHz
LV (low-voltage main) mode: 1.6 V ≤ V_{DD} ≤ 5.5 V@1 MHz to 4 MHz

Remarks 1. f_{MX}: High-speed system clock frequency (X1 clock oscillation frequency or external main system clock frequency)

2. f_{IH}: High-speed on-chip oscillator clock frequency

3. f_{SUB}: Subsystem clock frequency (XT1 clock oscillation frequency)

4. Except subsystem clock operation, temperature condition of the TYP. value is T_A = 25°C

(1) Flash ROM: 16 to 64 KB of 20- to 64-pin products

(T_A = −40 to +85°C, 1.6 V ≤ EV_{DD0} ≤ V_{DD} ≤ 5.5 V, V_{SS} = EV_{SS0} = 0 V) (2/2)

Parameter	Symbol	Conditions				MIN.	TYP.	MAX.	Unit
Supply current Note 1	I_{DD2} Note 2	HALT mode	HS (high-speed main) mode Note 7	f_{IH} = 32 MHz Note 4	V_{DD} = 5.0 V		0.54	1.63	mA
					V_{DD} = 3.0 V		0.54	1.63	mA
				f_{IH} = 24 MHz Note 4	V_{DD} = 5.0 V		0.44	1.28	mA
					V_{DD} = 3.0 V		0.44	1.28	mA
				f_{IH} = 16 MHz Note 4	V_{DD} = 5.0 V		0.40	1.00	mA
					V_{DD} = 3.0 V		0.40	1.00	mA
			LS (low-speed main) mode Note 7	f_{IH} = 8 MHz Note 4	V_{DD} = 3.0 V		260	530	μA
					V_{DD} = 2.0 V		260	530	μA
			LV (low-voltage main) mode Note 7	f_{IH} = 4 MHz Note 4	V_{DD} = 3.0 V		420	640	μA
					V_{DD} = 2.0 V		420	640	μA
			HS (high-speed main) mode Note 7	f_{MX} = 20 MHz Note 3, V_{DD} = 5.0 V	Square wave input		0.28	1.00	mA
					Resonator connection		0.45	1.17	mA
				f_{MX} = 20 MHz Note 3, V_{DD} = 3.0 V	Square wave input		0.28	1.00	mA
					Resonator connection		0.45	1.17	mA
				f_{MX} = 10 MHz Note 3, V_{DD} = 5.0 V	Square wave input		0.19	0.60	mA
					Resonator connection		0.26	0.67	mA
				f_{MX} = 10 MHz Note 3, V_{DD} = 3.0 V	Square wave input		0.19	0.60	mA
					Resonator connection		0.26	0.67	mA
			LS (low-speed main) mode Note 7	f_{MX} = 8 MHz Note 3, V_{DD} = 3.0 V	Square wave input		95	330	μA
					Resonator connection		145	380	μA
				f_{MX} = 8 MHz Note 3, V_{DD} = 2.0 V	Square wave input		95	330	μA
					Resonator connection		145	380	μA
			Subsystem clock operation	f_{SUB} = 32.768 kHz Note 5 T_A = −40°C	Square wave input		0.25	0.57	μA
					Resonator connection		0.44	0.76	μA
				f_{SUB} = 32.768 kHz Note 5 T_A = +25°C	Square wave input		0.30	0.57	μA
					Resonator connection		0.49	0.76	μA
				f_{SUB} = 32.768 kHz Note 5 T_A = +50°C	Square wave input		0.37	1.17	μA
					Resonator connection		0.56	1.36	μA
				f_{SUB} = 32.768 kHz Note 5 T_A = +70°C	Square wave input		0.53	1.97	μA
					Resonator connection		0.72	2.16	μA
				f_{SUB} = 32.768 kHz Note 5 T_A = +85°C	Square wave input		0.82	3.37	μA
					Resonator connection		1.01	3.56	μA
	I_{DD3} Note 6	STOP mode Note 8	T_A = −40°C				0.18	0.50	μA
			T_A = +25°C				0.23	0.50	μA
			T_A = +50°C				0.30	1.10	μA
			T_A = +70°C				0.46	1.90	μA
			T_A = +85°C				0.75	3.30	μA

(**Notes** and **Remarks** are listed on the next page.)

Notes 1. Total current flowing into V_{DD} and EV_{DD0}, including the input leakage current flowing when the level of the input pin is fixed to V_{DD}, EV_{DD0} or V_{SS}, EV_{SS0}. The values below the MAX. column include the peripheral operation current. However, not including the current flowing into the A/D converter, LVD circuit, I/O port, and on-chip pull-up/pull-down resistors and the current flowing during data flash rewrite.

2. During HALT instruction execution by flash memory.

3. When high-speed on-chip oscillator and subsystem clock are stopped.

4. When high-speed system clock and subsystem clock are stopped.

5. When high-speed on-chip oscillator and high-speed system clock are stopped. When RTCLPC = 1 and setting ultra-low current consumption (AMPHS1 = 1). The current flowing into the RTC is included. However, not including the current flowing into the 12-bit interval timer and watchdog timer.

6. Not including the current flowing into the RTC, 12-bit interval timer, and watchdog timer.

7. Relationship between operation voltage width, operation frequency of CPU and operation mode is as below.

HS (high-speed main) mode: 2.7 V ≤ V_{DD} ≤ 5.5 V@1 MHz to 32 MHz
2.4 V ≤ V_{DD} ≤ 5.5 V@1 MHz to 16 MHz
LS (low-speed main) mode: 1.8 V ≤ V_{DD} ≤ 5.5 V@1 MHz to 8 MHz
LV (low-voltage main) mode: 1.6 V ≤ V_{DD} ≤ 5.5 V@1 MHz to 4 MHz

8. Regarding the value for current to operate the subsystem clock in STOP mode, refer to that in HALT mode.

Remarks 1. f_{MX}: High-speed system clock frequency (X1 clock oscillation frequency or external main system clock frequency)

2. f_{IH}: High-speed on-chip oscillator clock frequency

3. f_{SUB}: Subsystem clock frequency (XT1 clock oscillation frequency)

4. Except subsystem clock operation and STOP mode, temperature condition of the TYP. value is T_A = 25°C

(2) Flash ROM: 96 to 256 KB of 30- to 100-pin products

(T_A = −40 to +85°C, 1.6 V ≤ EV_{DD0} = EV_{DD1} ≤ V_{DD} ≤ 5.5 V, V_{SS} = EV_{SS0} = EV_{SS1} = 0 V) (1/2)

Parameter	Symbol	Conditions					MIN.	TYP.	MAX.	Unit
Supply current Note 1	I_{DD1}	Operating mode	HS (high-speed main) mode Note 5	f_{IH} = 32 MHz Note 3	Basic operation	V_{DD} = 5.0 V		2.3		mA
						V_{DD} = 3.0 V		2.3		mA
					Normal operation	V_{DD} = 5.0 V		5.2	8.5	mA
						V_{DD} = 3.0 V		5.2	8.5	mA
				f_{IH} = 24 MHz Note 3	Normal operation	V_{DD} = 5.0 V		4.1	6.6	mA
						V_{DD} = 3.0 V		4.1	6.6	mA
				f_{IH} = 16 MHz Note 3	Normal operation	V_{DD} = 5.0 V		3.0	4.7	mA
						V_{DD} = 3.0 V		3.0	4.7	mA
			LS (low-speed main) mode Note 5	f_{IH} = 8 MHz Note 3	Normal operation	V_{DD} = 3.0 V		1.3	2.1	mA
						V_{DD} = 2.0 V		1.3	2.1	mA
			LV (low-voltage main) mode Note 5	f_{IH} = 4 MHz Note 3	Normal operation	V_{DD} = 3.0 V		1.3	1.8	mA
						V_{DD} = 2.0 V		1.3	1.8	mA
			HS (high-speed main) mode Note 5	f_{MX} = 20 MHz Note 2, V_{DD} = 5.0 V	Normal operation	Square wave input		3.4	5.5	mA
						Resonator connection		3.6	5.7	mA
				f_{MX} = 20 MHz Note 2, V_{DD} = 3.0 V	Normal operation	Square wave input		3.4	5.5	mA
						Resonator connection		3.6	5.7	mA
				f_{MX} = 10 MHz Note 2, V_{DD} = 5.0 V	Normal operation	Square wave input		2.1	3.2	mA
						Resonator connection		2.1	3.2	mA
				f_{MX} = 10 MHz Note 2, V_{DD} = 3.0 V	Normal operation	Square wave input		2.1	3.2	mA
						Resonator connection		2.1	3.2	mA
			LS (low-speed main) mode Note 5	f_{MX} = 8 MHz Note 2, V_{DD} = 3.0 V	Normal operation	Square wave input		1.2	2.0	mA
						Resonator connection		1.2	2.0	mA
				f_{MX} = 8 MHz Note 2, V_{DD} = 2.0 V	Normal operation	Square wave input		1.2	2.0	mA
						Resonator connection		1.2	2.0	mA
			Subsystem clock operation	f_{SUB} = 32.768 kHz Note 4 T_A = −40°C	Normal operation	Square wave input		4.8	5.9	μA
						Resonator connection		4.9	6.0	μA
				f_{SUB} = 32.768 kHz Note 4 T_A = +25°C	Normal operation	Square wave input		4.9	5.9	μA
						Resonator connection		5.0	6.0	μA
				f_{SUB} = 32.768 kHz Note 4 T_A = +50°C	Normal operation	Square wave input		5.0	7.6	μA
						Resonator connection		5.1	7.7	μA
				f_{SUB} = 32.768 kHz Note 4 T_A = +70°C	Normal operation	Square wave input		5.2	9.3	μA
						Resonator connection		5.3	9.4	μA
				f_{SUB} = 32.768 kHz Note 4 T_A = +85°C	Normal operation	Square wave input		5.7	13.3	μA
						Resonator connection		5.8	13.4	μA

(**Notes** and **Remarks** are listed on the next page.)

Notes 1. Total current flowing into V_{DD}, EV_{DD0}, and EV_{DD1}, including the input leakage current flowing when the level of the input pin is fixed to V_{DD}, EV_{DD0}, and EV_{DD1}, or V_{SS}, EV_{SS0}, and EV_{SS1}. The values below the MAX. column include the peripheral operation current. However, not including the current flowing into the A/D converter, LVD circuit, I/O port, and on-chip pull-up/pull-down resistors and the current flowing during data flash rewrite.

2. When high-speed on-chip oscillator and subsystem clock are stopped.

3. When high-speed system clock and subsystem clock are stopped.

4. When high-speed on-chip oscillator and high-speed system clock are stopped. When AMPHS1 = 1 (Ultra-low power consumption oscillation). However, not including the current flowing into the 12-bit interval timer and watchdog timer.

5. Relationship between operation voltage width, operation frequency of CPU and operation mode is as below.

HS (high-speed main) mode: 2.7 V ≤ V_{DD} ≤ 5.5 V@1 MHz to 32 MHz
2.4 V ≤ V_{DD} ≤ 5.5 V@1 MHz to 16 MHz
LS (low-speed main) mode: 1.8 V ≤ V_{DD} ≤ 5.5 V@1 MHz to 8 MHz
LV (low-voltage main) mode: 1.6 V ≤ V_{DD} ≤ 5.5 V@1 MHz to 4 MHz

Remarks 1. f_{MX}: High-speed system clock frequency (X1 clock oscillation frequency or external main system clock frequency)

2. f_{IH}: High-speed on-chip oscillator clock frequency

3. f_{SUB}: Subsystem clock frequency (XT1 clock oscillation frequency)

4. Except subsystem clock operation, temperature condition of the TYP. value is T_A = 25°C

(2) Flash ROM: 96 to 256 KB of 30- to 100-pin products

(T_A = –40 to +85°C, 1.6 V ≤ EV_{DD0} = EV_{DD1} ≤ V_{DD} ≤ 5.5 V, V_{SS} = EV_{SS0} = EV_{SS1} = 0 V) (2/2)

Parameter	Symbol	Conditions				MIN.	TYP.	MAX.	Unit
Supply current Note 1	I_{DD2} Note 2	HALT mode	HS (high-speed main) mode Note 7	f_{IH} = 32 MHz Note 4	V_{DD} = 5.0 V		0.62	1.86	mA
					V_{DD} = 3.0 V		0.62	1.86	mA
				f_{IH} = 24 MHz Note 4	V_{DD} = 5.0 V		0.50	1.45	mA
					V_{DD} = 3.0 V		0.50	1.45	mA
				f_{IH} = 16 MHz Note 4	V_{DD} = 5.0 V		0.44	1.11	mA
					V_{DD} = 3.0 V		0.44	1.11	mA
			LS (low-speed main) mode Note 7	f_{IH} = 8 MHz Note 4	V_{DD} = 3.0 V		290	620	μA
					V_{DD} = 2.0 V		290	620	μA
			LV (low-voltage main) mode Note 7	f_{IH} = 4 MHz Note 4	V_{DD} = 3.0 V		440	680	μA
					V_{DD} = 2.0 V		440	680	μA
			HS (high-speed main) mode Note 7	f_{MX} = 20 MHz Note 3, V_{DD} = 5.0 V	Square wave input		0.31	1.08	mA
					Resonator connection		0.48	1.28	mA
				f_{MX} = 20 MHz Note 3, V_{DD} = 3.0 V	Square wave input		0.31	1.08	mA
					Resonator connection		0.48	1.28	mA
				f_{MX} = 10 MHz Note 3, V_{DD} = 5.0 V	Square wave input		0.21	0.63	mA
					Resonator connection		0.28	0.71	mA
				f_{MX} = 10 MHz Note 3, V_{DD} = 3.0 V	Square wave input		0.21	0.63	mA
					Resonator connection		0.28	0.71	mA
			LS (low-speed main) mode Note 7	f_{MX} = 8 MHz Note 3, V_{DD} = 3.0 V	Square wave input		110	360	μA
					Resonator connection		160	420	μA
				f_{MX} = 8 MHz Note 3, V_{DD} = 2.0 V	Square wave input		110	360	μA
					Resonator connection		160	420	μA
			Subsystem clock operation	f_{SUB} = 32.768 kHz Note 5 T_A = –40°C	Square wave input		0.28	0.61	μA
					Resonator connection		0.47	0.80	μA
				f_{SUB} = 32.768 kHz Note 5 T_A = +25°C	Square wave input		0.34	0.61	μA
					Resonator connection		0.53	0.80	μA
				f_{SUB} = 32.768 kHz Note 5 T_A = +50°C	Square wave input		0.41	2.30	μA
					Resonator connection		0.60	2.49	μA
				f_{SUB} = 32.768 kHz Note 5 T_A = +70°C	Square wave input		0.64	4.03	μA
					Resonator connection		0.83	4.22	μA
				f_{SUB} = 32.768 kHz Note 5 T_A = +85°C	Square wave input		1.09	8.04	μA
					Resonator connection		1.28	8.23	μA
	I_{DD3} Note 6	STOP mode Note 8	T_A = –40°C				0.19	0.52	μA
			T_A = +25°C				0.25	0.52	μA
			T_A = +50°C				0.32	2.21	μA
			T_A = +70°C				0.55	3.94	μA
			T_A = +85°C				1.00	7.95	μA

(**Notes** and **Remarks** are listed on the next page.)

Notes 1. Total current flowing into V_{DD}, EV_{DD0}, and EV_{DD1}, including the input leakage current flowing when the level of the input pin is fixed to V_{DD}, EV_{DD0}, and EV_{DD1}, or V_{SS}, EV_{SS0}, and EV_{SS1}. The values below the MAX. column include the peripheral operation current . However, not including the current flowing into the A/D converter, LVD circuit, I/O port, and on-chip pull-up/pull-down resistors and the current flowing during data flash rewrite.

2. During HALT instruction execution by flash memory.

3. When high-speed on-chip oscillator and subsystem clock are stopped.

4. When high-speed system clock and subsystem clock are stopped.

5. When high-speed on-chip oscillator and high-speed system clock are stopped. When RTCLPC = 1 and setting ultra-low current consumption (AMPHS1 = 1). The current flowing into the RTC is included. However, not including the current flowing into the 12-bit interval timer and watchdog timer.

6. Not including the current flowing into the RTC, 12-bit interval timer, and watchdog timer.

7. Relationship between operation voltage width, operation frequency of CPU and operation mode is as below.

HS (high-speed main) mode: 2.7 V ≤ V_{DD} ≤ 5.5 V@1 MHz to 32 MHz
2.4 V ≤ V_{DD} ≤ 5.5 V@1 MHz to 16 MHz
LS (low-speed main) mode: 1.8 V ≤ V_{DD} ≤ 5.5 V@1 MHz to 8 MHz
LV (low-voltage main) mode: 1.6 V ≤ V_{DD} ≤ 5.5 V@1 MHz to 4 MHz

8. Regarding the value for current to operate the subsystem clock in STOP mode, refer to that in HALT mode.

Remarks 1. f_{MX}: High-speed system clock frequency (X1 clock oscillation frequency or external main system clock frequency)

2. f_{IH}: High-speed on-chip oscillator clock frequency

3. f_{SUB}: Subsystem clock frequency (XT1 clock oscillation frequency)

4. Except subsystem clock operation and STOP mode, temperature condition of the TYP. value is T_A = 25°C

(3) 128-pin products, and flash ROM: 384 to 512 KB of 44- to 100-pin products

(T_A = −40 to +85°C, 1.6 V ≤ EV_{DD0} = EV_{DD1} ≤ V_{DD} ≤ 5.5 V, V_{SS} = EV_{SS0} = EV_{SS1} = 0 V) (1/2)

Parameter	Symbol	Conditions					MIN.	TYP.	MAX.	Unit
Supply current Note 1	I_{DD1}	Operating mode	HS (high-speed main) mode Note 5	f_{IH} = 32 MHz Note 3	Basic operation	V_{DD} = 5.0 V		2.6		mA
						V_{DD} = 3.0 V		2.6		mA
					Normal operation	V_{DD} = 5.0 V		6.1	9.5	mA
						V_{DD} = 3.0 V		6.1	9.5	mA
				f_{IH} = 24 MHz Note 3	Normal operation	V_{DD} = 5.0 V		4.8	7.4	mA
						V_{DD} = 3.0 V		4.8	7.4	mA
				f_{IH} = 16 MHz Note 3	Normal operation	V_{DD} = 5.0 V		3.5	5.3	mA
						V_{DD} = 3.0 V		3.5	5.3	mA
			LS (low-speed main) mode Note 5	f_{IH} = 8 MHz Note 3	Normal operation	V_{DD} = 3.0 V		1.5	2.3	mA
						V_{DD} = 2.0 V		1.5	2.3	mA
			LV (low-voltage main) mode Note 5	f_{IH} = 4 MHz Note 3	Normal operation	V_{DD} = 3.0 V		1.5	2.0	mA
						V_{DD} = 2.0 V		1.5	2.0	mA
			HS (high-speed main) mode Note 5	f_{MX} = 20 MHz Note 2, V_{DD} = 5.0 V	Normal operation	Square wave input		3.9	6.1	mA
						Resonator connection		4.1	6.3	mA
				f_{MX} = 20 MHz Note 2, V_{DD} = 3.0 V	Normal operation	Square wave input		3.9	6.1	mA
						Resonator connection		4.1	6.3	mA
				f_{MX} = 10 MHz Note 2, V_{DD} = 5.0 V	Normal operation	Square wave input		2.5	3.7	mA
						Resonator connection		2.5	3.7	mA
				f_{MX} = 10 MHz Note 2, V_{DD} = 3.0 V	Normal operation	Square wave input		2.5	3.7	mA
						Resonator connection		2.5	3.7	mA
			LS (low-speed main) mode Note 5	f_{MX} = 8 MHz Note 2, V_{DD} = 3.0 V	Normal operation	Square wave input		1.4	2.2	mA
						Resonator connection		1.4	2.2	mA
				f_{MX} = 8 MHz Note 2, V_{DD} = 2.0 V	Normal operation	Square wave input		1.4	2.2	mA
						Resonator connection		1.4	2.2	mA
			Subsystem clock operation	f_{SUB} = 32.768 kHz Note 4 T_A = −40°C	Normal operation	Square wave input		5.4	6.5	μA
						Resonator connection		5.5	6.6	μA
				f_{SUB} = 32.768 kHz Note 4 T_A = +25°C	Normal operation	Square wave input		5.5	6.5	μA
						Resonator connection		5.6	6.6	μA
				f_{SUB} = 32.768 kHz Note 4 T_A = +50°C	Normal operation	Square wave input		5.6	9.4	μA
						Resonator connection		5.7	9.5	μA
				f_{SUB} = 32.768 kHz Note 4 T_A = +70°C	Normal operation	Square wave input		5.9	12.0	μA
						Resonator connection		6.0	12.1	μA
				f_{SUB} = 32.768 kHz Note 4 T_A = +85°C	Normal operation	Square wave input		6.6	16.3	μA
						Resonator connection		6.7	16.4	μA

(**Notes** and **Remarks** are listed on the next page.)

Notes 1. Total current flowing into V_{DD}, EV_{DD0}, and EV_{DD1}, including the input leakage current flowing when the level of the input pin is fixed to V_{DD}, EV_{DD0}, and EV_{DD1}, or V_{SS}, EV_{SS0}, and EV_{SS1}. The values below the MAX. column include the peripheral operation current. However, not including the current flowing into the A/D converter, LVD circuit, I/O port, and on-chip pull-up/pull-down resistors and the current flowing during data flash rewrite.

2. When high-speed on-chip oscillator and subsystem clock are stopped.

3. When high-speed system clock and subsystem clock are stopped.

4. When high-speed on-chip oscillator and high-speed system clock are stopped. When AMPHS1 = 1 (Ultra-low power consumption oscillation). However, not including the current flowing into the RTC, 12-bit interval timer, and watchdog timer.

5. Relationship between operation voltage width, operation frequency of CPU and operation mode is as below.

HS (high-speed main) mode: 2.7 V ≤ V_{DD} ≤ 5.5 V@1 MHz to 32 MHz
2.4 V ≤ V_{DD} ≤ 5.5 V@1 MHz to 16 MHz
LS (low-speed main) mode: 1.8 V ≤ V_{DD} ≤ 5.5 V @1 MHz to 8 MHz
LV (low-voltage main) mode: 1.6 V ≤ V_{DD} ≤ 5.5 V@1 MHz to 4 MHz

Remarks 1. f_{MX}: High-speed system clock frequency (X1 clock oscillation frequency or external main system clock frequency)

2. f_{IH}: High-speed on-chip oscillator clock frequency

3. f_{SUB}: Subsystem clock frequency (XT1 clock oscillation frequency)

4. Except subsystem clock operation, temperature condition of the TYP. value is T_A = 25°C

(3) 128-pin products, and flash ROM: 384 to 512 KB of 44- to 100-pin products

(T_A = −40 to +85°C, 1.6 V ≤ EV_{DD0} = EV_{DD1} ≤ V_{DD} ≤ 5.5 V, V_{SS} = EV_{SS0} = EV_{SS1} = 0 V) (2/2)

Parameter	Symbol	Conditions				MIN.	TYP.	MAX.	Unit
Supply current Note 1	I_{DD2} Note 2	HALT mode	HS (high-speed main) mode Note 7	f_{IH} = 32 MHz Note 4	V_{DD} = 5.0 V		0.62	1.89	mA
					V_{DD} = 3.0 V		0.62	1.89	mA
				f_{IH} = 24 MHz Note 4	V_{DD} = 5.0 V		0.50	1.48	mA
					V_{DD} = 3.0 V		0.50	1.48	mA
				f_{IH} = 16 MHz Note 4	V_{DD} = 5.0 V		0.44	1.12	mA
					V_{DD} = 3.0 V		0.44	1.12	mA
			LS (low-speed main) mode Note 7	f_{IH} = 8 MHz Note 4	V_{DD} = 3.0 V		290	620	μA
					V_{DD} = 2.0 V		290	620	μA
			LV (low-voltage main) mode Note 7	f_{IH} = 4 MHz Note 4	V_{DD} = 3.0 V		460	700	μA
					V_{DD} = 2.0 V		460	700	μA
			HS (high-speed main) mode Note 7	f_{MX} = 20 MHz Note 3, V_{DD} = 5.0 V	Square wave input		0.31	1.14	mA
					Resonator connection		0.48	1.34	mA
				f_{MX} = 20 MHz Note 3, V_{DD} = 3.0 V	Square wave input		0.31	1.14	mA
					Resonator connection		0.48	1.34	mA
				f_{MX} = 10 MHz Note 3, V_{DD} = 5.0 V	Square wave input		0.21	0.68	mA
					Resonator connection		0.28	0.76	mA
				f_{MX} = 10 MHz Note 3, V_{DD} = 3.0 V	Square wave input		0.21	0.68	mA
					Resonator connection		0.28	0.76	mA
			LS (low-speed main) mode Note 7	f_{MX} = 8 MHz Note 3, V_{DD} = 3.0 V	Square wave input		110	390	μA
					Resonator connection		160	450	μA
				f_{MX} = 8 MHz Note 3, V_{DD} = 2.0 V	Square wave input		110	390	μA
					Resonator connection		160	450	μA
			Subsystem clock operation	f_{SUB} = 32.768 kHz Note 5 T_A = −40°C	Square wave input		0.31	0.66	μA
					Resonator connection		0.50	0.85	μA
				f_{SUB} = 32.768 kHz Note 5 T_A = +25°C	Square wave input		0.38	0.66	μA
					Resonator connection		0.57	0.85	μA
				f_{SUB} = 32.768 kHz Note 5 T_A = +50°C	Square wave input		0.47	3.49	μA
					Resonator connection		0.66	3.68	μA
				f_{SUB} = 32.768 kHz Note 5 T_A = +70°C	Square wave input		0.80	6.10	μA
					Resonator connection		0.99	6.29	μA
				f_{SUB} = 32.768 kHz Note 5 T_A = +85°C	Square wave input		1.52	10.46	μA
					Resonator connection		1.71	10.65	μA
	I_{DD3} Note 6	STOP mode Note 8	T_A = −40°C				0.19	0.54	μA
			T_A = +25°C				0.26	0.54	μA
			T_A = +50°C				0.35	3.37	μA
			T_A = +70°C				0.68	5.98	μA
			T_A = +85°C				1.40	10.34	μA

(**Notes** and **Remarks** are listed on the next page.)

Notes 1. Total current flowing into V_{DD}, EV_{DD0}, and EV_{DD1}, including the input leakage current flowing when the level of the input pin is fixed to V_{DD}, EV_{DD0}, and EV_{DD1}, or V_{SS}, EV_{SS0}, and EV_{SS1}. The values below the MAX. column include the peripheral operation current . However, not including the current flowing into the A/D converter, LVD circuit, I/O port, and on-chip pull-up/pull-down resistors and the current flowing during data flash rewrite.

2. During HALT instruction execution by flash memory.

3. When high-speed on-chip oscillator and subsystem clock are stopped.

4. When high-speed system clock and subsystem clock are stopped.

5. When high-speed on-chip oscillator and high-speed system clock are stopped. When RTCLPC = 1 and setting ultra-low current consumption (AMPHS1 = 1). The current flowing into the RTC is included. However, not including the current flowing into the 12-bit interval timer and watchdog timer.

6. Not including the current flowing into the RTC, 12-bit interval timer, and watchdog timer.

7. Relationship between operation voltage width, operation frequency of CPU and operation mode is as below.

HS (high-speed main) mode: 2.7 V ≤ V_{DD} ≤ 5.5 V@1 MHz to 32 MHz
2.4 V ≤ V_{DD} ≤ 5.5 V@1 MHz to 16 MHz
LS (low-speed main) mode: 1.8 V ≤ V_{DD} ≤ 5.5 V @1 MHz to 8 MHz
LV (low-voltage main) mode: 1.6 V ≤ V_{DD} ≤ 5.5 V@1 MHz to 4 MHz

8. Regarding the value for current to operate the subsystem clock in STOP mode, refer to that in HALT mode.

Remarks 1. f_{MX}: High-speed system clock frequency (X1 clock oscillation frequency or external main system clock frequency)

2. f_{IH}: High-speed on-chip oscillator clock frequency

3. f_{SUB}: Subsystem clock frequency (XT1 clock oscillation frequency)

4. Except subsystem clock operation and STOP mode, temperature condition of the TYP. value is T_A = 25°C

(4) Peripheral Functions (Common to all products)

(T_A = −40 to +85°C, 1.6 V ≤ EV_{DD0} = EV_{DD1} ≤ V_{DD} ≤ 5.5 V, V_{SS} = EV_{SS0} = EV_{SS1} = 0 V)

Parameter	Symbol	Conditions		MIN.	TYP.	MAX.	Unit
Low-speed on-chip oscillator operating current	I_{FIL} Note 1				0.20		μA
RTC operating current	I_{RTC} Notes 1, 2, 3				0.02		μA
12-bit interval timer operating current	I_{IT} Notes 1, 2, 4				0.02		μA
Watchdog timer operating current	I_{WDT} Notes 1, 2, 5	f_{IL} = 15 kHz			0.22		μA
A/D converter operating current	I_{ADC} Notes 1, 6	When conversion at maximum speed	Normal mode, AV_{REFP} = V_{DD} = 5.0 V		1.3	1.7	mA
			Low voltage mode, AV_{REFP} = V_{DD} = 3.0 V		0.5	0.7	mA
A/D converter reference voltage current	I_{ADREF} Note 1				75.0		μA
Temperature sensor operating current	I_{TMPS} Note 1				75.0		μA
LVD operating current	I_{LVI} Notes 1, 7				0.08		μA
Self-programming operating current	I_{FSP} Notes 1, 9				2.50	12.20	mA
BGO operating current	I_{BGO} Notes 1, 8				2.50	12.20	mA
SNOOZE operating current	I_{SNOZ} Note 1	ADC operation	The mode is performed Note 10		0.50	0.60	mA
			The A/D conversion operations are performed, Low voltage mode, AV_{REFP} = V_{DD} = 3.0 V		1.20	1.44	mA
		CSI/UART operation			0.70	0.84	mA

Notes 1. Current flowing to V_{DD}.

2. When high speed on-chip oscillator and high-speed system clock are stopped.

3. Current flowing only to the real-time clock (RTC) (excluding the operating current of the low-speed on-chip oscillator and the XT1 oscillator). The supply current of the RL78 microcontrollers is the sum of the values of either I_{DD1} or I_{DD2}, and I_{RTC}, when the real-time clock operates in operation mode or HALT mode. When the low-speed on-chip oscillator is selected, I_{FIL} should be added. I_{DD2} subsystem clock operation includes the operational current of the real-time clock.

4. Current flowing only to the 12-bit interval timer (excluding the operating current of the low-speed on-chip oscillator and the XT1 oscillator). The supply current of the RL78 microcontrollers is the sum of the values of either I_{DD1} or I_{DD2}, and I_{IT}, when the 12-bit interval timer operates in operation mode or HALT mode. When the low-speed on-chip oscillator is selected, I_{FIL} should be added.

5. Current flowing only to the watchdog timer (including the operating current of the low-speed on-chip oscillator). The supply current of the RL78 microcontrollers is the sum of I_{DD1}, I_{DD2} or I_{DD3} and I_{WDT} when the watchdog timer is in operation.

6. Current flowing only to the A/D converter. The supply current of the RL78 microcontrollers is the sum of I_{DD1} or I_{DD2} and I_{ADC} when the A/D converter operates in an operation mode or the HALT mode.

7. Current flowing only to the LVD circuit. The supply current of the RL78 microcontrollers is the sum of I_{DD1}, I_{DD2} or I_{DD3} and I_{LVD} when the LVD circuit is in operation.

8. Current flowing only during data flash rewrite.

9. Current flowing only during self programming.

10. For shift time to the SNOOZE mode, see **18.3.3 SNOOZE mode.**

Remarks 1. f_{IL}: Low-speed on-chip oscillator clock frequency

2. f_{SUB}: Subsystem clock frequency (XT1 clock oscillation frequency)

3. f_{CLK}: CPU/peripheral hardware clock frequency

4. Temperature condition of the TYP. value is T_A = 25°C

2.4 AC Characteristics

(T_A = –40 to +85°C, 1.6 V ≤ EV_{DD0} = EV_{DD1} ≤ V_{DD} ≤ 5.5 V, V_{SS} = EV_{SS0} = EV_{SS1} = 0 V)

Items	Symbol	Conditions			MIN.	TYP.	MAX.	Unit
Instruction cycle (minimum instruction execution time)	T_{CY}	Main system clock (f_{MAIN}) operation	HS (high-speed main) mode	2.7 V ≤ V_{DD} ≤ 5.5 V	0.03125		1	μs
				2.4 V ≤ V_{DD} < 2.7 V	0.0625		1	μs
			LS (low-speed main) mode	1.8 V ≤ V_{DD} ≤ 5.5 V	0.125		1	μs
			LV (low-voltage main) mode	1.6 V ≤ V_{DD} ≤ 5.5 V	0.25		1	μs
		Subsystem clock (f_{SUB}) operation		1.8 V ≤ V_{DD} ≤ 5.5 V	28.5	30.5	31.3	μs
		In the self programming mode	HS (high-speed main) mode	2.7 V ≤ V_{DD} ≤ 5.5 V	0.03125		1	μs
				2.4 V ≤ V_{DD} < 2.7 V	0.0625		1	μs
			LS (low-speed main) mode	1.8 V ≤ V_{DD} ≤ 5.5 V	0.125		1	μs
			LV (low-voltage main) mode	1.8 V ≤ V_{DD} ≤ 5.5 V	0.25		1	μs
External system clock frequency	f_{EX}	2.7 V ≤ V_{DD} ≤ 5.5 V			1.0		20.0	MHz
		2.4 V ≤ V_{DD} < 2.7 V			1.0		16.0	MHz
		1.8 V ≤ V_{DD} < 2.4 V			1.0		8.0	MHz
		1.6 V ≤ V_{DD} < 1.8 V			1.0		4.0	MHz
	f_{EXS}				32		35	kHz
External system clock input high-level width, low-level width	t_{EXH}, t_{EXL}	2.7 V ≤ V_{DD} ≤ 5.5 V			24			ns
		2.4 V ≤ V_{DD} < 2.7 V			30			ns
		1.8 V ≤ V_{DD} < 2.4 V			60			ns
		1.6 V ≤ V_{DD} < 1.8 V			120			ns
	t_{EXHS}, t_{EXLS}				13.7			μs
TI00 to TI07, TI10 to TI17 input high-level width, low-level width	t_{TIH}, t_{TIL}				1/f_{MCK}+10			ns[Note]
TO00 to TO07, TO10 to TO17 output frequency	f_{TO}	HS (high-speed main) mode		4.0 V ≤ EV_{DD0} ≤ 5.5 V			16	MHz
				2.7 V ≤ EV_{DD0} < 4.0 V			8	MHz
				1.8 V ≤ EV_{DD0} < 2.7 V			4	MHz
				1.6 V ≤ EV_{DD0} < 1.8 V			2	MHz
		LS (low-speed main) mode		1.8 V ≤ EV_{DD0} ≤ 5.5 V			4	MHz
				1.6 V ≤ EV_{DD0} < 1.8 V			2	MHz
		LV (low-voltage main) mode		1.6 V ≤ EV_{DD0} ≤ 5.5 V			2	MHz
PCLBUZ0, PCLBUZ1 output frequency	f_{PCL}	HS (high-speed main) mode		4.0 V ≤ EV_{DD0} ≤ 5.5 V			16	MHz
				2.7 V ≤ EV_{DD0} < 4.0 V			8	MHz
				1.8 V ≤ EV_{DD0} < 2.7 V			4	MHz
				1.6 V ≤ EV_{DD0} < 1.8 V			2	MHz
		LS (low-speed main) mode		1.8 V ≤ EV_{DD0} ≤ 5.5 V			4	MHz
				1.6 V ≤ EV_{DD0} < 1.8 V			2	MHz
		LV (low-voltage main) mode		1.8 V ≤ EV_{DD0} ≤ 5.5 V			4	MHz
				1.6 V ≤ EV_{DD0} < 1.8 V			2	MHz
Interrupt input high-level width, low-level width	t_{INTH}, t_{INTL}	INTP0		1.6 V ≤ V_{DD} ≤ 5.5 V	1			μs
		INTP1 to INTP11		1.6 V ≤ EV_{DD0} ≤ 5.5 V	1			μs
Key interrupt input low-level width	t_{KR}	KR0 to KR7		1.8 V ≤ EV_{DD0} ≤ 5.5 V	250			ns
				1.6 V ≤ EV_{DD0} < 1.8 V	1			μs
$\overline{RESET}$ low-level width	t_{RSL}				10			μs

(**Note** and **Remark** are listed on the next page.)

Note The following conditions are required for low voltage interface when $EV_{DD0} < V_{DD}$

1.8 V ≤ EV_{DD0} < 2.7 V : MIN. 125 ns

1.6 V ≤ EV_{DD0} < 1.8 V : MIN. 250 ns

Remark f_{MCK}: Timer array unit operation clock frequency

(Operation clock to be set by the CKSmn0, CKSmn1 bits of timer mode register mn (TMRmn).

m: Unit number (m = 0, 1), n: Channel number (n = 0 to 7))

Minimum Instruction Execution Time during Main System Clock Operation

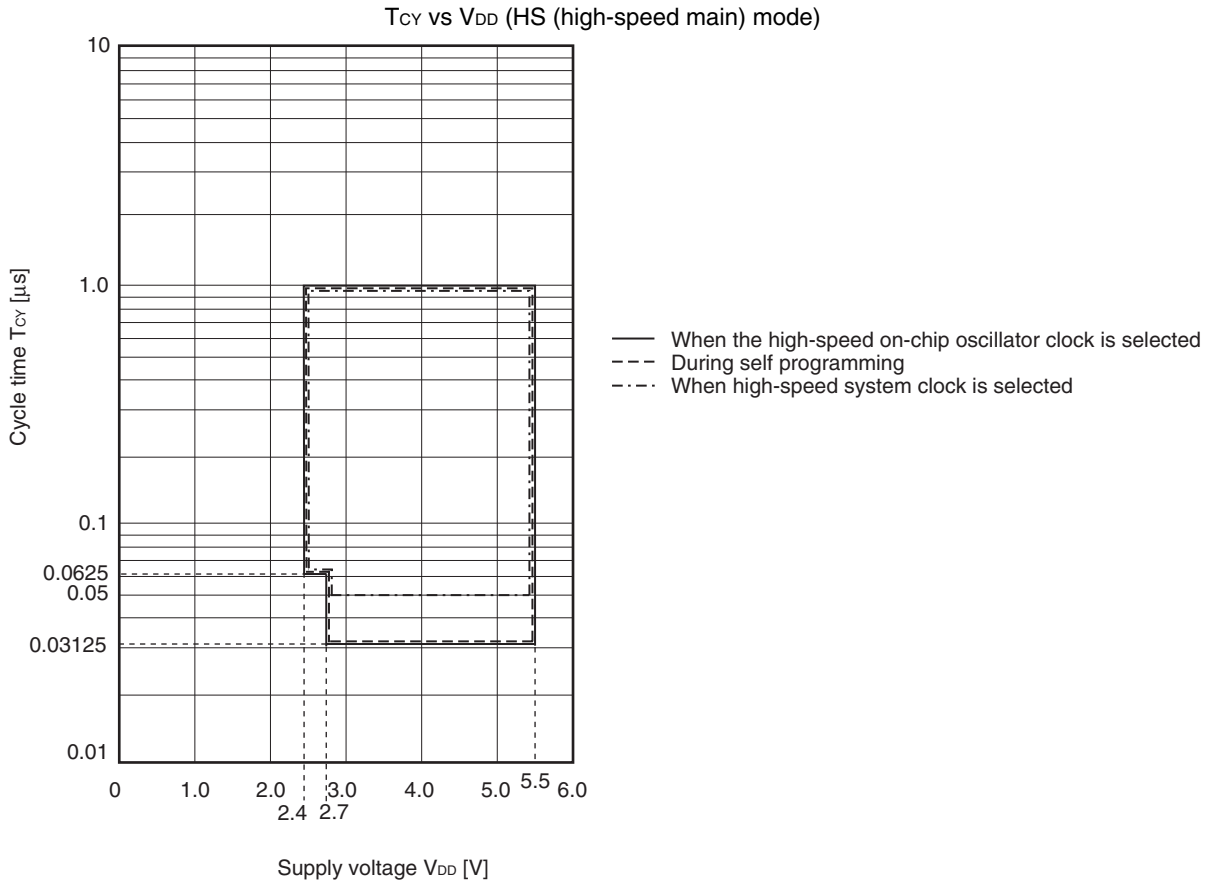

T_{CY} vs V_{DD} (LS (low-speed main) mode)

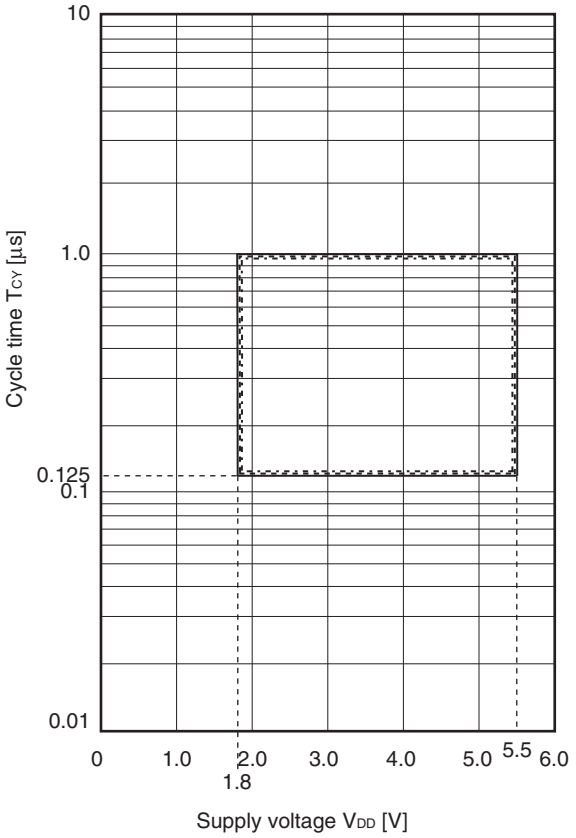

When the high-speed on-chip oscillator clock is selected
During self programming
When high-speed system clock is selected

T_{CY} vs V_{DD} (LV (low-voltage main) mode)

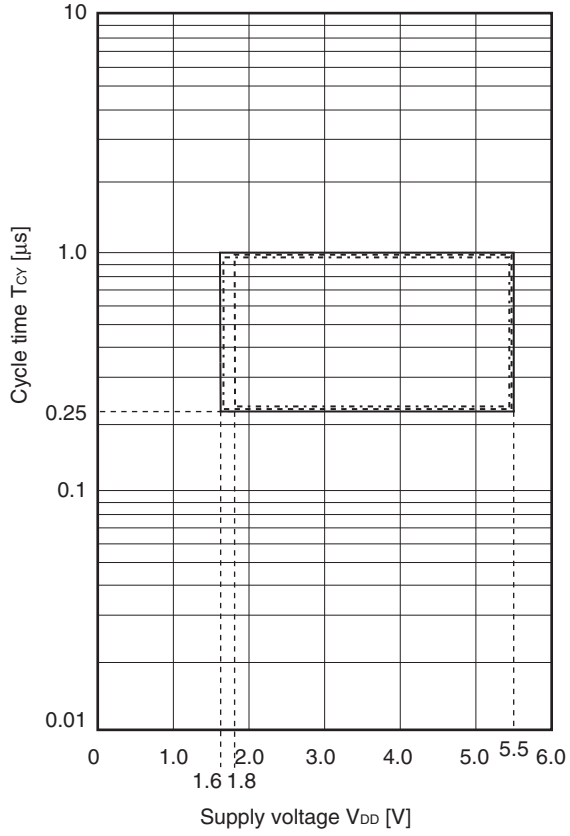

When the high-speed on-chip oscillator clock is selected
During self programming
When high-speed system clock is selected

AC Timing Test Points

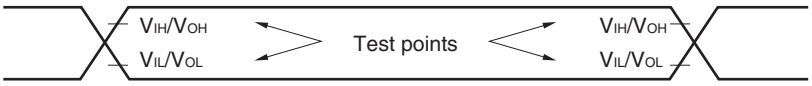

External System Clock Timing

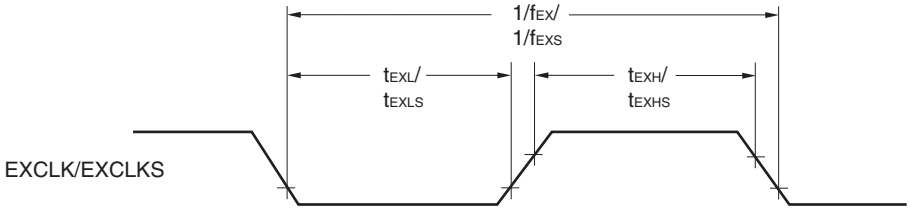

TI/TO Timing

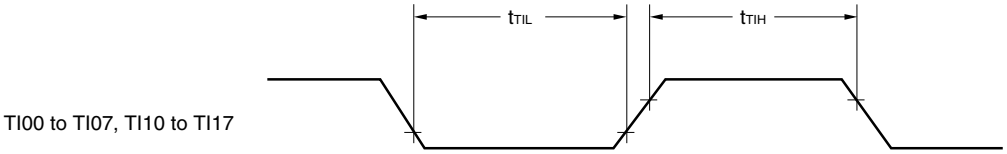

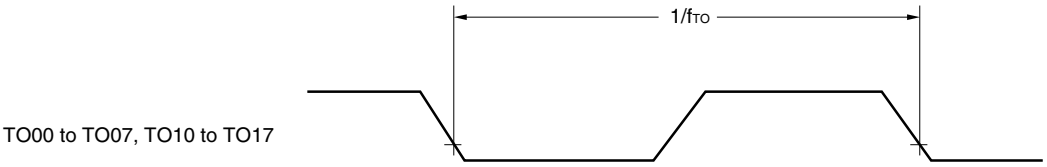

Interrupt Request Input Timing

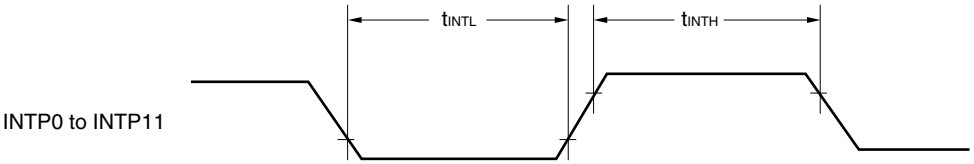

Key Interrupt Input Timing

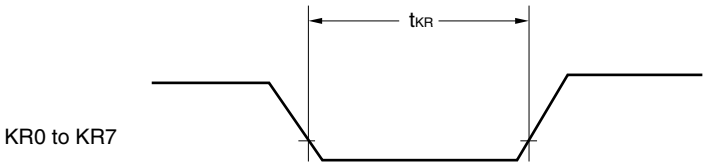

$\overline{\text{RESET}}$ Input Timing

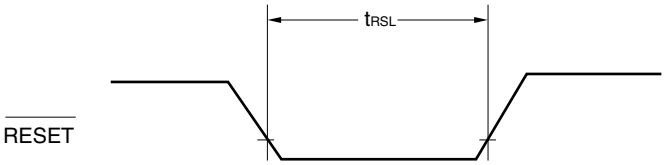

2.5 Peripheral Functions Characteristics

AC Timing Test Points

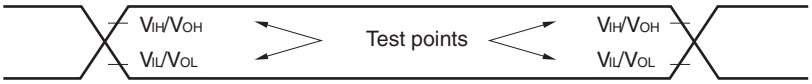

2.5.1 Serial array unit

(1) During communication at same potential (UART mode)

(T_A = –40 to +85°C, 1.6 V ≤ EV_{DD0} = EV_{DD1} ≤ V_{DD} ≤ 5.5 V, V_{SS} = EV_{SS0} = EV_{SS1} = 0 V)

Parameter	Symbol	Conditions	HS (high-speed main) Mode		LS (low-speed main) Mode		LV (low-voltage main) Mode		Unit
			MIN.	MAX.	MIN.	MAX.	MIN.	MAX.	
Transfer rate Note 1		2.4 V≤ EV_{DD0} ≤ 5.5 V		f_{MCK}/6 Note 2		f_{MCK}/6		f_{MCK}/6	bps
		Theoretical value of the maximum transfer rate f_{MCK} = f_{CLK} Note 3		5.3		1.3		0.6	Mbps
		1.8 V ≤ EV_{DD0} ≤ 5.5 V		f_{MCK}/6 Note 2		f_{MCK}/6		f_{MCK}/6	bps
		Theoretical value of the maximum transfer rate f_{MCK} = f_{CLK} Note 3		5.3		1.3		0.6	Mbps
		1.7 V ≤ EV_{DD0} ≤ 5.5 V		f_{MCK}/6 Note 2		f_{MCK}/6 Note 2		f_{MCK}/6	bps
		Theoretical value of the maximum transfer rate f_{MCK} = f_{CLK} Note 3		5.3		1.3		0.6	Mbps
		1.6 V ≤ EV_{DD0} ≤ 5.5 V	—			f_{MCK}/6 Note 2		f_{MCK}/6	bps
		Theoretical value of the maximum transfer rate f_{MCK} = f_{CLK} Note 3	—			1.3		0.6	Mbps

Notes 1. Transfer rate in the SNOOZE mode is 4800 bps only.

2. The following conditions are required for low voltage interface when EV_{DD0} < V_{DD}.
2.4 V ≤ EV_{DD0} < 2.7 V : MAX. 2.6 Mbps
1.8 V ≤ EV_{DD0} < 2.4 V : MAX. 1.3 Mbps
1.6 V ≤ EV_{DD0} < 1.8 V : MAX. 0.6 Mbps

3. The maximum operating frequencies of the CPU/peripheral hardware clock (f_{CLK}) are:
HS (high-speed main) mode: 32 MHz (2.7 V ≤ V_{DD} ≤ 5.5 V)
16 MHz (2.4 V ≤ V_{DD} ≤ 5.5 V)
LS (low-speed main) mode: 8 MHz (1.8 V ≤ V_{DD} ≤ 5.5 V)
LV (low-voltage main) mode: 4 MHz (1.6 V ≤ V_{DD} ≤ 5.5 V)

Caution Select the normal input buffer for the RxDq pin and the normal output mode for the TxDq pin by using port input mode register g (PIMg) and port output mode register g (POMg).

UART mode connection diagram (during communication at same potential)

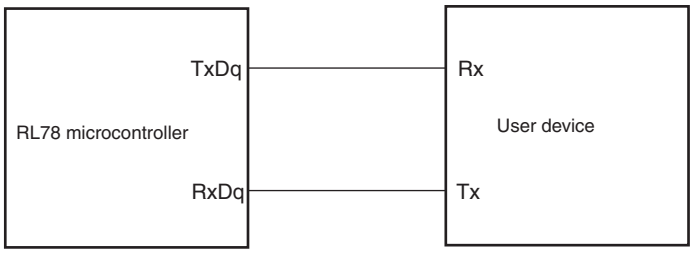

UART mode bit width (during communication at same potential) (reference)

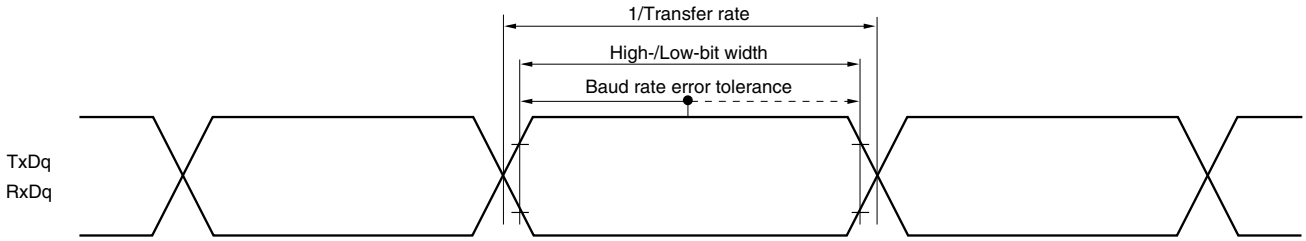

Remarks 1. q: UART number (q = 0 to 3), g: PIM and POM number (g = 0, 1, 8, 14)

2. f_{MCK}: Serial array unit operation clock frequency

(Operation clock to be set by the CKSmn bit of serial mode register mn (SMRmn). m: Unit number, n: Channel number (mn = 00 to 03, 10 to 13))

(2) During communication at same potential (CSI mode) (master mode, SCKp... internal clock output, corresponding CSI00 only)

(T_A = –40 to +85°C, 2.7 V ≤ EV_{DD0} = EV_{DD1} ≤ V_{DD} ≤ 5.5 V, V_{SS} = EV_{SS0} = EV_{SS1} = 0 V)

Parameter	Symbol	Conditions		HS (high-speed main) Mode		LS (low-speed main) Mode		LV (low-voltage main) Mode		Unit
				MIN.	MAX.	MIN.	MAX.	MIN.	MAX.	
SCKp cycle time	t_{KCY1}	$t_{KCY1} \geq 2/f_{CLK}$	4.0 V ≤ EV_{DD0} ≤ 5.5 V	62.5		250		500		ns
			2.7 V ≤ EV_{DD0} ≤ 5.5 V	83.3		250		500		ns
SCKp high-/low-level width	t_{KH1}, t_{KL1}	4.0 V ≤ EV_{DD0} ≤ 5.5 V		$t_{KCY1}/2$ – 7		$t_{KCY1}/2$ – 50		$t_{KCY1}/2$ – 50		ns
		2.7 V ≤ EV_{DD0} ≤ 5.5 V		$t_{KCY1}/2$ – 10		$t_{KCY1}/2$ – 50		$t_{KCY1}/2$ – 50		ns
SIp setup time (to SCKp↑) Note 1	t_{SIK1}	4.0 V ≤ EV_{DD0} ≤ 5.5 V		23		110		110		ns
		2.7 V ≤ EV_{DD0} ≤ 5.5 V		33		110		110		ns
SIp hold time (from SCKp↑) Note 2	t_{KSI1}	2.7 V ≤ EV_{DD0} ≤ 5.5 V		10		10		10		ns
Delay time from SCKp↓ to SOp output Note 3	t_{KSO1}	C = 20 pF Note 4			10		10		10	ns

Notes 1. When DAPmn = 0 and CKPmn = 0, or DAPmn = 1 and CKPmn = 1. The SIp setup time becomes “to SCKp↓” when DAPmn = 0 and CKPmn = 1, or DAPmn = 1 and CKPmn = 0.

2. When DAPmn = 0 and CKPmn = 0, or DAPmn = 1 and CKPmn = 1. The SIp hold time becomes “from SCKp↓” when DAPmn = 0 and CKPmn = 1, or DAPmn = 1 and CKPmn = 0.

3. When DAPmn = 0 and CKPmn = 0, or DAPmn = 1 and CKPmn = 1. The delay time to SOp output becomes “from SCKp↑” when DAPmn = 0 and CKPmn = 1, or DAPmn = 1 and CKPmn = 0.

4. C is the load capacitance of the SCKp and SOp output lines.

Caution Select the normal input buffer for the SIp pin and the normal output mode for the SOp pin and SCKp pin by using port input mode register g (PIMg) and port output mode register g (POMg).

Remarks 1. This value is valid only when CSI00’s peripheral I/O redirect function is not used.

2. p: CSI number (p = 00), m: Unit number (m = 0), n: Channel number (n = 0),
g: PIM and POM numbers (g = 1)

3. f_{MCK}: Serial array unit operation clock frequency

(Operation clock to be set by the CKSmn bit of serial mode register mn (SMRmn). m: Unit number, n: Channel number (mn = 00))

(3) During communication at same potential (CSI mode) (master mode, SCKp... internal clock output)

(T_A = –40 to +85°C, 1.6 V ≤ EV_{DD0} = EV_{DD1} ≤ V_{DD} ≤ 5.5 V, V_{SS} = EV_{SS0} = EV_{SS1} = 0 V)

Parameter	Symbol	Conditions		HS (high-speed main) Mode		LS (low-speed main) Mode		LV (low-voltage main) Mode		Unit
				MIN.	MAX.	MIN.	MAX.	MIN.	MAX.	
SCKp cycle time	t_{KCY1}	t_{KCY1} ≥ 4/f_{CLK}	2.7 V ≤ EV_{DD0} ≤ 5.5 V	125		500		1000		ns
			2.4 V ≤ EV_{DD0} ≤ 5.5 V	250		500		1000		ns
			1.8 V ≤ EV_{DD0} ≤ 5.5 V	500		500		1000		ns
			1.7 V ≤ EV_{DD0} ≤ 5.5 V	1000		1000		1000		ns
			1.6 V ≤ EV_{DD0} ≤ 5.5 V	—		1000		1000		ns
SCKp high-/low-level width	t_{KH1}, t_{KL1}	4.0 V ≤ EV_{DD0} ≤ 5.5 V		t_{KCY1}/2 – 12		t_{KCY1}/2 – 50		t_{KCY1}/2 – 50		ns
		2.7 V ≤ EV_{DD0} ≤ 5.5 V		t_{KCY1}/2 – 18		t_{KCY1}/2 – 50		t_{KCY1}/2 – 50		ns
		2.4 V ≤ EV_{DD0} ≤ 5.5 V		t_{KCY1}/2 – 38		t_{KCY1}/2 – 50		t_{KCY1}/2 – 50		ns
		1.8 V ≤ EV_{DD0} ≤ 5.5 V		t_{KCY1}/2 – 50		t_{KCY1}/2 – 50		t_{KCY1}/2 – 50		ns
		1.7 V ≤ EV_{DD0} ≤ 5.5 V		t_{KCY1}/2 – 100		t_{KCY1}/2 – 100		t_{KCY1}/2 – 100		ns
		1.6 V ≤ EV_{DD0} ≤ 5.5 V		—		t_{KCY1}/2 – 100		t_{KCY1}/2 – 100		ns
SIp setup time (to SCKp↑) Note 1	t_{SIK1}	4.0 V ≤ EV_{DD0} ≤ 5.5 V		44		110		110		ns
		2.7 V ≤ EV_{DD0} ≤ 5.5 V		44		110		110		ns
		2.4 V ≤ EV_{DD0} ≤ 5.5 V		75		110		110		ns
		1.8 V ≤ EV_{DD0} ≤ 5.5 V		110		110		110		ns
		1.7 V ≤ EV_{DD0} ≤ 5.5 V		220		220		220		ns
		1.6 V ≤ EV_{DD0} ≤ 5.5 V		—		220		220		ns
SIp hold time (from SCKp↑) Note 2	t_{KSI1}	1.7 V ≤ EV_{DD0} ≤ 5.5 V		19		19		19		ns
		1.6 V ≤ EV_{DD0} ≤ 5.5 V		—		19		19		ns
Delay time from SCKp↓ to SOp output Note 3	t_{KSO1}	1.7 V ≤ EV_{DD0} ≤ 5.5 V C = 30 pF Note 4			25		25		25	ns
		1.6 V ≤ EV_{DD0} ≤ 5.5 V C = 30 pF Note 4			—		25		25	ns

Notes 1. When DAPmn = 0 and CKPmn = 0, or DAPmn = 1 and CKPmn = 1. The SIp setup time becomes "to SCKp↓" when DAPmn = 0 and CKPmn = 1, or DAPmn = 1 and CKPmn = 0.

2. When DAPmn = 0 and CKPmn = 0, or DAPmn = 1 and CKPmn = 1. The SIp hold time becomes "from SCKp↓" when DAPmn = 0 and CKPmn = 1, or DAPmn = 1 and CKPmn = 0.

3. When DAPmn = 0 and CKPmn = 0, or DAPmn = 1 and CKPmn = 1. The delay time to SOp output becomes "from SCKp↑" when DAPmn = 0 and CKPmn = 1, or DAPmn = 1 and CKPmn = 0.

4. C is the load capacitance of the SCKp and SOp output lines.

Caution Select the normal input buffer for the SIp pin and the normal output mode for the SOp pin and SCKp pin by using port input mode register g (PIMg) and port output mode register g (POMg).

Remarks 1. p: CSI number (p = 00, 01, 10, 11, 20, 21, 30, 31), m: Unit number (m = 0, 1), n: Channel number (n = 0 to 3),
g: PIM and POM numbers (g = 0, 1, 4, 5, 8, 14)

2. f_{MCK}: Serial array unit operation clock frequency
(Operation clock to be set by the CKSmn bit of serial mode register mn (SMRmn). m: Unit number, n: Channel number (mn = 00 to 03, 10 to 13))

(4) During communication at same potential (CSI mode) (slave mode, SCKp... external clock input) (1/2)
(T_A = –40 to +85°C, 1.6 V ≤ EV_{DD0} = EV_{DD1} ≤ V_{DD} ≤ 5.5 V, V_{SS} = EV_{SS0} = EV_{SS1} = 0 V)

Parameter	Symbol	Conditions		HS (high-speed main) Mode		LS (low-speed main) Mode		LV (low-voltage main) Mode		Unit
				MIN.	MAX.	MIN.	MAX.	MIN.	MAX.	
SCKp cycle time Note 5	t_{KCY2}	4.0 V ≤ EV_{DD0} ≤ 5.5 V	20 MHz < f_{MCK}	8/f_{MCK}		—		—		ns
			f_{MCK} ≤ 20 MHz	6/f_{MCK}		6/f_{MCK}		6/f_{MCK}		ns
		2.7 V ≤ EV_{DD0} ≤ 5.5 V	16 MHz < f_{MCK}	8/f_{MCK}		—		—		ns
			f_{MCK} ≤ 16 MHz	6/f_{MCK}		6/f_{MCK}		6/f_{MCK}		ns
		2.4 V ≤ EV_{DD0} ≤ 5.5 V		6/f_{MCK} and 500		6/f_{MCK} and 500		6/f_{MCK} and 500		ns
		1.8 V ≤ EV_{DD0} ≤ 5.5 V		6/f_{MCK} and 750		6/f_{MCK} and 750		6/f_{MCK} and 750		ns
		1.7 V ≤ EV_{DD0} ≤ 5.5 V		6/f_{MCK} and 1500		6/f_{MCK} and 1500		6/f_{MCK} and 1500		ns
		1.6 V ≤ EV_{DD0} ≤ 5.5 V		—		6/f_{MCK} and 1500		6/f_{MCK} and 1500		ns
SCKp high-/low-level width	t_{KH2}, t_{KL2}	4.0 V ≤ EV_{DD0} ≤ 5.5 V		t_{KCY2}/2 – 7		t_{KCY2}/2 – 7		t_{KCY2}/2 – 7		ns
		2.7 V ≤ EV_{DD0} ≤ 5.5 V		t_{KCY2}/2 – 8		t_{KCY2}/2 – 8		t_{KCY2}/2 – 8		ns
		1.8 V ≤ EV_{DD0} ≤ 5.5 V		t_{KCY2}/2 – 18		t_{KCY2}/2 – 18		t_{KCY2}/2 – 18		ns
		1.7 V ≤ EV_{DD0} ≤ 5.5 V		t_{KCY2}/2 – 66		t_{KCY2}/2 – 66		t_{KCY2}/2 – 66		ns
		1.6 V ≤ EV_{DD0} ≤ 5.5 V		—		t_{KCY2}/2 – 66		t_{KCY2}/2 – 66		ns

(**Notes**, **Caution**, and **Remarks** are listed on the next page.)

(4) During communication at same potential (CSI mode) (slave mode, SCKp... external clock input) (2/2)

(T_A = –40 to +85°C, 1.6 V ≤ EV_{DD0} = EV_{DD1} ≤ V_{DD} ≤ 5.5 V, V_{SS} = EV_{SS0} = EV_{SS1} = 0 V)

Parameter	Symbol	Conditions		HS (high-speed main) Mode		LS (low-speed main) Mode		LV (low-voltage main) Mode		Unit
				MIN.	MAX.	MIN.	MAX.	MIN.	MAX.	
SIp setup time (to SCKp↑) Note 1	t_{SIK2}	2.7 V ≤ EV_{DD0} ≤ 5.5 V		1/f_{MCK}+20		1/f_{MCK}+30		1/f_{MCK}+30		ns
		1.8 V ≤ EV_{DD0} ≤ 5.5 V		1/f_{MCK}+30		1/f_{MCK}+30		1/f_{MCK}+30		ns
		1.7 V ≤ EV_{DD0} ≤ 5.5 V		1/f_{MCK}+40		1/f_{MCK}+40		1/f_{MCK}+40		ns
		1.6 V ≤ EV_{DD0} ≤ 5.5 V		—		1/f_{MCK}+40		1/f_{MCK}+40		ns
SIp hold time (from SCKp↑) Note 2	t_{KSI2}	1.8 V ≤ EV_{DD0} ≤ 5.5 V		1/f_{MCK}+31		1/f_{MCK}+31		1/f_{MCK}+31		ns
		1.7 V ≤ EV_{DD0} ≤ 5.5 V		1/f_{MCK}+250		1/f_{MCK}+250		1/f_{MCK}+250		ns
		1.6 V ≤ EV_{DD0} ≤ 5.5 V		—		1/f_{MCK}+250		1/f_{MCK}+250		ns
Delay time from SCKp↓ to SOp output Note 3	t_{KSO2}	C = 30 pF Note 4	2.7 V ≤ EV_{DD0} ≤ 5.5 V		2/f_{MCK}+44		2/f_{MCK}+110		2/f_{MCK}+110	ns
			2.4 V ≤ EV_{DD0} ≤ 5.5 V		2/f_{MCK}+75		2/f_{MCK}+110		2/f_{MCK}+110	ns
			1.8 V ≤ EV_{DD0} ≤ 5.5 V		2/f_{MCK}+110		2/f_{MCK}+110		2/f_{MCK}+110	ns
			1.7 V ≤ EV_{DD0} ≤ 5.5 V		2/f_{MCK}+220		2/f_{MCK}+220		2/f_{MCK}+220	ns
			1.6 V ≤ EV_{DD0} ≤ 5.5 V		—		2/f_{MCK}+220		2/f_{MCK}+220	ns

Notes 1. When DAPmn = 0 and CKPmn = 0, or DAPmn = 1 and CKPmn = 1. The SIp setup time becomes "to SCKp↓" when DAPmn = 0 and CKPmn = 1, or DAPmn = 1 and CKPmn = 0.

2. When DAPmn = 0 and CKPmn = 0, or DAPmn = 1 and CKPmn = 1. The SIp hold time becomes "from SCKp↓" when DAPmn = 0 and CKPmn = 1, or DAPmn = 1 and CKPmn = 0.

3. When DAPmn = 0 and CKPmn = 0, or DAPmn = 1 and CKPmn = 1. The delay time to SOp output becomes "from SCKp↑" when DAPmn = 0 and CKPmn = 1, or DAPmn = 1 and CKPmn = 0.

4. C is the load capacitance of the SOp output lines.

5. Transfer rate in the SNOOZE mode: MAX. 1 Mbps

Caution Select the normal input buffer for the SIp pin and SCKp pin and the normal output mode for the SOp pin by using port input mode register g (PIMg) and port output mode register g (POMg).

Remarks 1. p: CSI number (p = 00, 01, 10, 11, 20, 21, 30, 31), m: Unit number (m = 0, 1), n: Channel number (n = 0 to 3), g: PIM number (g = 0, 1, 4, 5, 8, 14)

2. f_{MCK}: Serial array unit operation clock frequency

(Operation clock to be set by the CKSmn bit of serial mode register mn (SMRmn). m: Unit number, n: Channel number (mn = 00 to 03, 10 to 13))

CSI mode connection diagram (during communication at same potential)

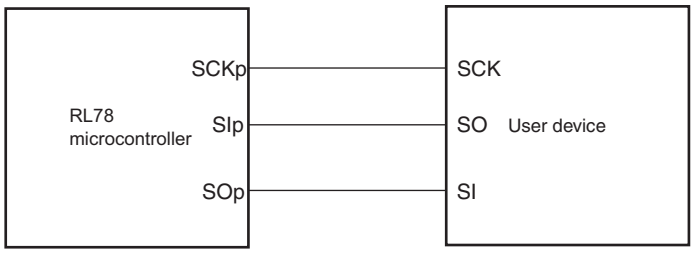

CSI mode serial transfer timing (during communication at same potential)
(When DAPmn = 0 and CKPmn = 0, or DAPmn = 1 and CKPmn = 1.)

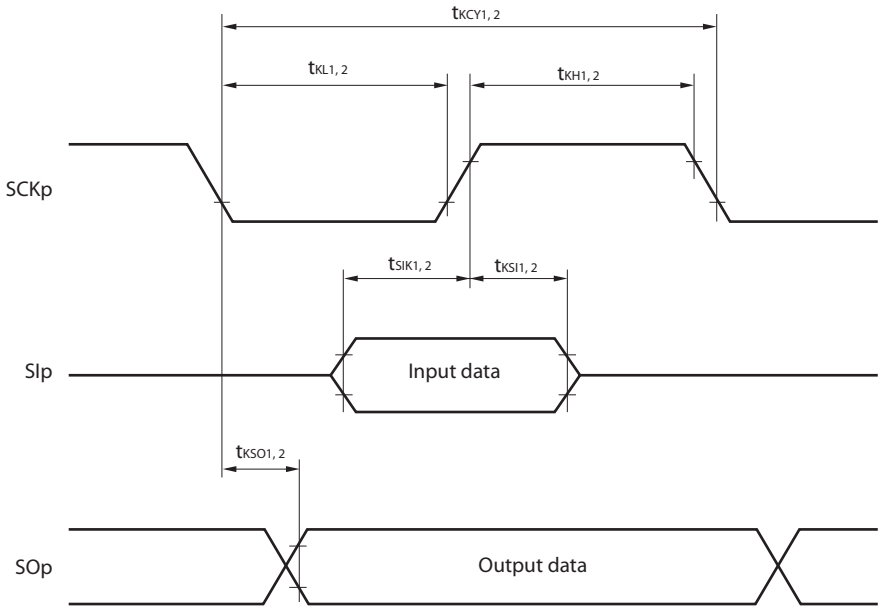

CSI mode serial transfer timing (during communication at same potential)
(When DAPmn = 0 and CKPmn = 1, or DAPmn = 1 and CKPmn = 0.)

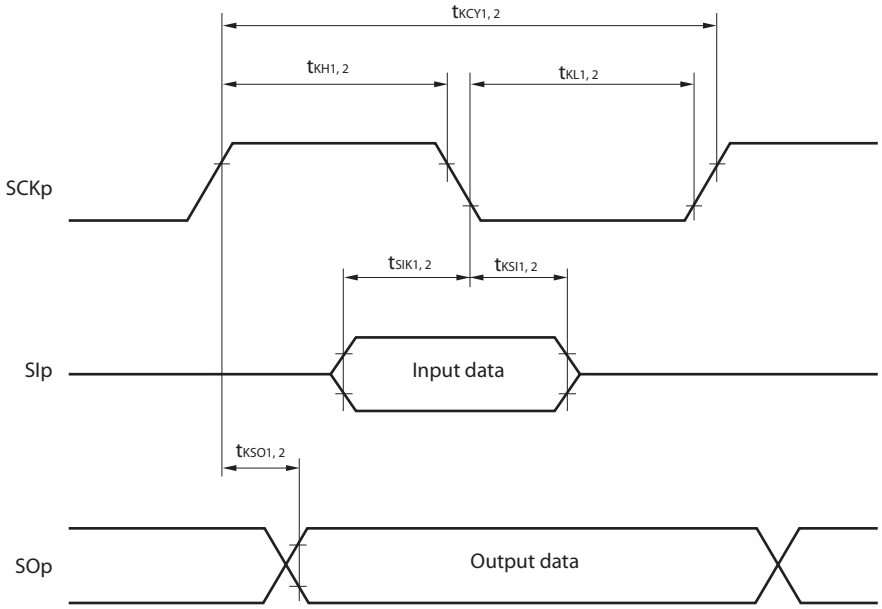

Remarks 1. p: CSI number (p = 00, 01, 10, 11, 20, 21, 30, 31)

2. m: Unit number, n: Channel number (mn = 00 to 03, 10 to 13)

(5) During communication at same potential (simplified I²C mode) (1/2)

(T_A = –40 to +85°C, 1.6 V ≤ EV_{DD0} = EV_{DD1} ≤ V_{DD} ≤ 5.5 V, V_{SS} = EV_{SS0} = EV_{SS1} = 0 V)

Parameter	Symbol	Conditions	HS (high-speed main) Mode		LS (low-speed main) Mode		LV (low-voltage main) Mode		Unit
			MIN.	MAX.	MIN.	MAX.	MIN.	MAX.	
SCLr clock frequency	f_{SCL}	2.7 V ≤ EV_{DD0} ≤ 5.5 V, C_b = 50 pF, R_b = 2.7 kΩ		1000 Note 1		400 Note 1		400 Note 1	kHz
		1.8 V ≤ EV_{DD0} ≤ 5.5 V, C_b = 100 pF, R_b = 3 kΩ		400 Note 1		400 Note 1		400 Note 1	kHz
		1.8 V ≤ EV_{DD0} < 2.7 V, C_b = 100 pF, R_b = 5 kΩ		300 Note 1		300 Note 1		300 Note 1	kHz
		1.7 V ≤ EV_{DD0} < 1.8 V, C_b = 100 pF, R_b = 5 kΩ		250 Note 1		250 Note 1		250 Note 1	kHz
		1.6 V ≤ EV_{DD0} < 1.8 V, C_b = 100 pF, R_b = 5 kΩ		—		250 Note 1		250 Note 1	kHz
Hold time when SCLr = “L”	t_{LOW}	2.7 V ≤ EV_{DD0} ≤ 5.5 V, C_b = 50 pF, R_b = 2.7 kΩ	475		1150		1150		ns
		1.8 V ≤ EV_{DD0} ≤ 5.5 V, C_b = 100 pF, R_b = 3 kΩ	1150		1150		1150		ns
		1.8 V ≤ EV_{DD0} < 2.7 V, C_b = 100 pF, R_b = 5 kΩ	1550		1550		1550		ns
		1.7 V ≤ EV_{DD0} < 1.8 V, C_b = 100 pF, R_b = 5 kΩ	1850		1850		1850		ns
		1.6 V ≤ EV_{DD0} < 1.8 V, C_b = 100 pF, R_b = 5 kΩ	—		1850		1850		ns
Hold time when SCLr = “H”	t_{HIGH}	2.7 V ≤ EV_{DD0} ≤ 5.5 V, C_b = 50 pF, R_b = 2.7 kΩ	475		1150		1150		ns
		1.8 V ≤ EV_{DD0} ≤ 5.5 V, C_b = 100 pF, R_b = 3 kΩ	1150		1150		1150		ns
		1.8 V ≤ EV_{DD0} < 2.7 V, C_b = 100 pF, R_b = 5 kΩ	1550		1550		1550		ns
		1.7 V ≤ EV_{DD0} < 1.8 V, C_b = 100 pF, R_b = 5 kΩ	1850		1850		1850		ns
		1.6 V ≤ EV_{DD0} < 1.8 V, C_b = 100 pF, R_b = 5 kΩ	—		1850		1850		ns

(**Notes** and **Caution** are listed on the next page, and **Remarks** are listed on the page after the next page.)

(5) During communication at same potential (simplified I^2C mode) (2/2)

(T_A = –40 to +85°C, 1.6 V ≤ EV_{DD0} = EV_{DD1} ≤ V_{DD} ≤ 5.5 V, V_{SS} = EV_{SS0} = EV_{SS1} = 0 V)

Parameter	Symbol	Conditions	HS (high-speed main) Mode		LS (low-speed main) Mode		LV (low-voltage main) Mode		Unit
			MIN.	MAX.	MIN.	MAX.	MIN.	MAX.	
Data setup time (reception)	$t_{SU:DAT}$	2.7 V ≤ EV_{DD0} ≤ 5.5 V, C_b = 50 pF, R_b = 2.7 kΩ	1/f_{MCK} + 85 Note2		1/f_{MCK} + 145 Note2		1/f_{MCK} + 145 Note2		ns
		1.8 V ≤ EV_{DD0} ≤ 5.5 V, C_b = 100 pF, R_b = 3 kΩ	1/f_{MCK} + 145 Note2		1/f_{MCK} + 145 Note2		1/f_{MCK} + 145 Note2		ns
		1.8 V ≤ EV_{DD0} < 2.7 V, C_b = 100 pF, R_b = 5 kΩ	1/f_{MCK} + 230 Note2		1/f_{MCK} + 230 Note2		1/f_{MCK} + 230 Note2		ns
		1.7 V ≤ EV_{DD0} < 1.8 V, C_b = 100 pF, R_b = 5 kΩ	1/f_{MCK} + 290 Note2		1/f_{MCK} + 290 Note2		1/f_{MCK} + 290 Note2		ns
		1.6 V ≤ EV_{DD0} < 1.8 V, C_b = 100 pF, R_b = 5 kΩ	—		1/f_{MCK} + 290 Note2		1/f_{MCK} + 290 Note2		ns
Data hold time (transmission)	$t_{HD:DAT}$	2.7 V ≤ EV_{DD0} ≤ 5.5 V, C_b = 50 pF, R_b = 2.7 kΩ	0	305	0	305	0	305	ns
		1.8 V ≤ EV_{DD0} ≤ 5.5 V, C_b = 100 pF, R_b = 3 kΩ	0	355	0	355	0	355	ns
		1.8 V ≤ EV_{DD0} < 2.7 V, C_b = 100 pF, R_b = 5 kΩ	0	405	0	405	0	405	ns
		1.7 V ≤ EV_{DD0} < 1.8 V, C_b = 100 pF, R_b = 5 kΩ	0	405	0	405	0	405	ns
		1.6 V ≤ EV_{DD0} < 1.8 V, C_b = 100 pF, R_b = 5 kΩ	—		0	405	0	405	ns

Notes 1. The value must also be equal to or less than f_{MCK}/4.

2. Set the f_{MCK} value to keep the hold time of SCLr = "L" and SCLr = "H".

Caution Select the normal input buffer and the N-ch open drain output (V_{DD} tolerance (When 20- to 52-pin products)/EV_{DD} tolerance (When 64- to 128-pin products)) mode for the SDAr pin and the normal output mode for the SCLr pin by using port input mode register g (PIMg) and port output mode register h (POMh).

(**Remarks** are listed on the next page.)

Simplified I²C mode mode connection diagram (during communication at same potential)

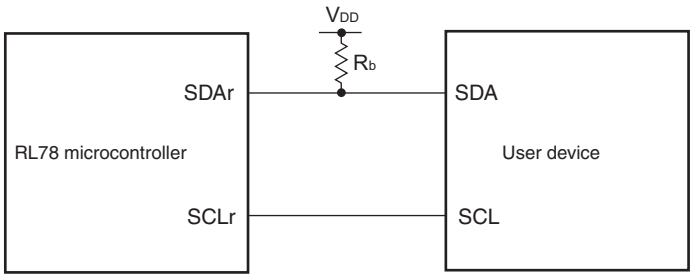

Simplified I²C mode serial transfer timing (during communication at same potential)

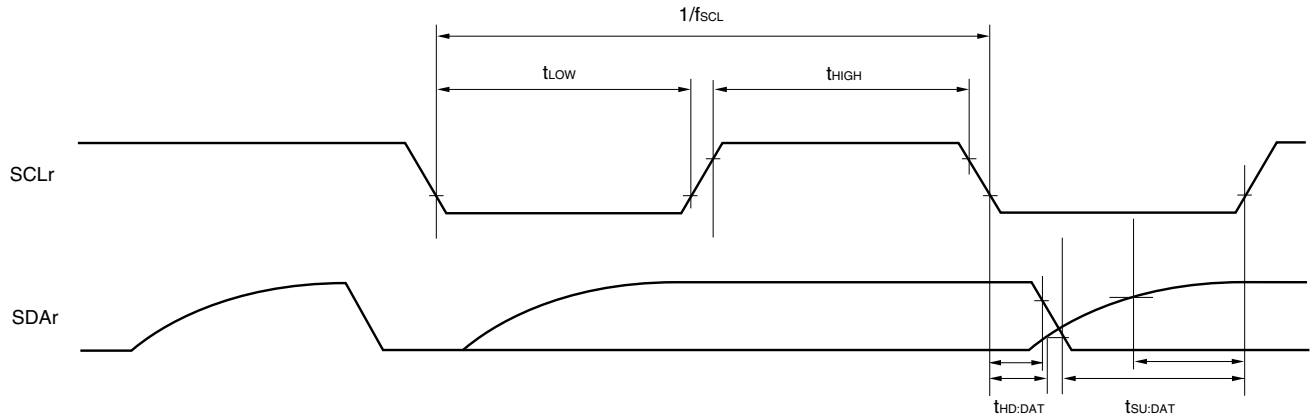

Remarks 1. R_b[Ω]:Communication line (SDAr) pull-up resistance, C_b[F]: Communication line (SDAr, SCLr) load capacitance

2. r: IIC number (r = 00, 01, 10, 11, 20, 21, 30, 31), g: PIM number (g = 0, 1, 4, 5, 8, 14), h: POM number (g = 0, 1, 4, 5, 7 to 9, 14)

3. f_{MCK}: Serial array unit operation clock frequency

(Operation clock to be set by the CKSmn bit of serial mode register mn (SMRmn). m: Unit number (m = 0, 1),

n: Channel number (n = 0 to 3), mn = 00 to 03, 10 to 13)

(6) Communication at different potential (1.8 V, 2.5 V, 3 V) (UART mode) (1/2)

(T_A = –40 to +85°C, 1.8 V ≤ EV_{DD0} = EV_{DD1} ≤ V_{DD} ≤ 5.5 V, V_{SS} = EV_{SS0} = EV_{SS1} = 0 V)

Parameter	Symbol	Conditions		HS (high-speed main) Mode		LS (low-speed main) Mode		LV (low-voltage main) Mode		Unit
				MIN.	MAX.	MIN.	MAX.	MIN.	MAX.	
Transfer rate		Reception	4.0 V ≤ EV_{DD0} ≤ 5.5 V, 2.7 V ≤ V_b ≤ 4.0 V		f_{MCK}/6 Note 1		f_{MCK}/6 Note 1		f_{MCK}/6 Note 1	bps
			Theoretical value of the maximum transfer rate f_{MCK} = f_{CLK} Note 4		5.3		1.3		0.6	Mbps
			2.7 V ≤ EV_{DD0} < 4.0 V, 2.3 V ≤ V_b ≤ 2.7 V		f_{MCK}/6 Note 1		f_{MCK}/6 Note 1		f_{MCK}/6 Note 1	bps
			Theoretical value of the maximum transfer rate f_{MCK} = f_{CLK} Note 4		5.3		1.3		0.6	Mbps
			1.8 V ≤ EV_{DD0} < 3.3 V, 1.6 V ≤ V_b ≤ 2.0 V		f_{MCK}/6 Notes 1 to 3		f_{MCK}/6 Notes 1, 2		f_{MCK}/6 Notes 1, 2	bps
			Theoretical value of the maximum transfer rate f_{MCK} = f_{CLK} Note 4		5.3		1.3		0.6	Mbps

Notes 1. Transfer rate in the SNOOZE mode is 4800 bps only.

2. Use it with $EV_{DD0} \geq V_b$.

3. The following conditions are required for low voltage interface when $EV_{DD0} < V_{DD}$.

2.4 V ≤ EV_{DD0} < 2.7 V : MAX. 2.6 Mbps

1.8 V ≤ EV_{DD0} < 2.4 V : MAX. 1.3 Mbps

4. The maximum operating frequencies of the CPU/peripheral hardware clock (f_{CLK}) are:

HS (high-speed main) mode: 32 MHz (2.7 V ≤ V_{DD} ≤ 5.5 V)

16 MHz (2.4 V ≤ V_{DD} ≤ 5.5 V)

LS (low-speed main) mode: 8 MHz (1.8 V ≤ V_{DD} ≤ 5.5 V)

LV (low-voltage main) mode: 4 MHz (1.6 V ≤ V_{DD} ≤ 5.5 V)

Caution Select the TTL input buffer for the RxDq pin and the N-ch open drain output (V_{DD} tolerance (When 20- to 52-pin products)/EV_{DD} tolerance (When 64- to 128-pin products)) mode for the TxDq pin by using port input mode register g (PIMg) and port output mode register g (POMg). For V_{IH} and V_{IL}, see the DC characteristics with TTL input buffer selected.

Remarks 1. V_b[V]: Communication line voltage

2. q: UART number (q = 0 to 3), g: PIM and POM number (g = 0, 1, 8, 14)

3. f_{MCK}: Serial array unit operation clock frequency

(Operation clock to be set by the CKSmn bit of serial mode register mn (SMRmn). m: Unit number, n: Channel number (mn = 00 to 03, 10 to 13)

4. UART2 cannot communicate at different potential when bit 1 (PIOR1) of peripheral I/O redirection register (PIOR) is 1.

(6) Communication at different potential (1.8 V, 2.5 V, 3 V) (UART mode) (2/2)

(T_A = –40 to +85°C, 1.8 V ≤ EV_{DD0} = EV_{DD1} ≤ V_{DD} ≤ 5.5 V, V_{SS} = EV_{SS0} = EV_{SS1} = 0 V)

Parameter	Symbol	Conditions		HS (high-speed main) Mode		LS (low-speed main) Mode		LV (low-voltage main) Mode		Unit
				MIN.	MAX.	MIN.	MAX.	MIN.	MAX.	
Transfer rate		Transmission	4.0 V ≤ EV_{DD0} ≤ 5.5 V, 2.7 V ≤ V_b ≤ 4.0 V		**Note 1**		**Note 1**		**Note 1**	bps
			Theoretical value of the maximum transfer rate C_b = 50 pF, R_b = 1.4 kΩ, V_b = 2.7 V		2.8 Note 2		2.8 Note 2		2.8 Note 2	Mbps
			2.7 V ≤ EV_{DD0} < 4.0 V, 2.3 V ≤ V_b ≤ 2.7 V		**Note 3**		**Note 3**		**Note 3**	bps
			Theoretical value of the maximum transfer rate C_b = 50 pF, R_b = 2.7 kΩ, V_b = 2.3 V		1.2 Note 4		1.2 Note 4		1.2 Note 4	Mbps
			1.8 V ≤ EV_{DD0} < 3.3 V, 1.6 V ≤ V_b ≤ 2.0 V		**Notes 5, 6**		**Notes 5, 6**		**Notes 5, 6**	bps
			Theoretical value of the maximum transfer rate C_b = 50 pF, R_b = 5.5 kΩ, V_b = 1.6 V		0.43 Note 7		0.43 Note 7		0.43 Note 7	Mbps

Notes 1. The smaller maximum transfer rate derived by using f_{MCK}/6 or the following expression is the valid maximum transfer rate.

Expression for calculating the transfer rate when 4.0 V ≤ EV_{DD0} ≤ 5.5 V and 2.7 V ≤ V_b ≤ 4.0 V

$$\text{Maximum transfer rate} = \frac{1}{\{-C_b \times R_b \times \ln(1 - \frac{2.2}{V_b})\} \times 3} \text{ [bps]}$$

$$\text{Baud rate error (theoretical value)} = \frac{\frac{1}{\text{Transfer rate} \times 2} - \{-C_b \times R_b \times \ln(1 - \frac{2.2}{V_b})\}}{(\frac{1}{\text{Transfer rate}}) \times \text{Number of transferred bits}} \times 100 \text{ [\%]}$$

* This value is the theoretical value of the relative difference between the transmission and reception sides.

2. This value as an example is calculated when the conditions described in the “Conditions” column are met. Refer to Note 1 above to calculate the maximum transfer rate under conditions of the customer.

3. The smaller maximum transfer rate derived by using f_{MCK}/6 or the following expression is the valid maximum transfer rate.

Expression for calculating the transfer rate when 2.7 V ≤ EV_{DD0} < 4.0 V and 2.3 V ≤ V_b ≤ 2.7 V

$$\text{Maximum transfer rate} = \frac{1}{\{-C_b \times R_b \times \ln(1 - \frac{2.0}{V_b})\} \times 3} \text{ [bps]}$$

$$\text{Baud rate error (theoretical value)} = \frac{\frac{1}{\text{Transfer rate} \times 2} - \{-C_b \times R_b \times \ln(1 - \frac{2.0}{V_b})\}}{(\frac{1}{\text{Transfer rate}}) \times \text{Number of transferred bits}} \times 100 \text{ [\%]}$$

* This value is the theoretical value of the relative difference between the transmission and reception sides.

4. This value as an example is calculated when the conditions described in the “Conditions” column are met. Refer to Note 3 above to calculate the maximum transfer rate under conditions of the customer.

5. Use it with $EV_{DD0} \geq V_b$.

6. The smaller maximum transfer rate derived by using f_{MCK}/6 or the following expression is the valid maximum transfer rate.

Expression for calculating the transfer rate when 1.8 V ≤ EV_{DD0} < 3.3 V and 1.6 V ≤ V_b ≤ 2.0 V

$$\text{Maximum transfer rate} = \frac{1}{\{-C_b \times R_b \times \ln(1 - \frac{1.5}{V_b})\} \times 3} \text{ [bps]}$$

$$\text{Baud rate error (theoretical value)} = \frac{\frac{1}{\text{Transfer rate} \times 2} - \{-C_b \times R_b \times \ln(1 - \frac{1.5}{V_b})\}}{(\frac{1}{\text{Transfer rate}}) \times \text{Number of transferred bits}} \times 100 \text{ [\%]}$$

* This value is the theoretical value of the relative difference between the transmission and reception sides.

7. This value as an example is calculated when the conditions described in the “Conditions” column are met. Refer to Note 6 above to calculate the maximum transfer rate under conditions of the customer.

Caution Select the TTL input buffer for the RxDq pin and the N-ch open drain output (V_{DD} tolerance (When 20- to 52-pin products)/EV_{DD} tolerance (When 64- to 128-pin products)) mode for the TxDq pin by using port input mode register g (PIMg) and port output mode register g (POMg). For V_{IH} and V_{IL}, see the DC characteristics with TTL input buffer selected.

UART mode connection diagram (during communication at different potential)

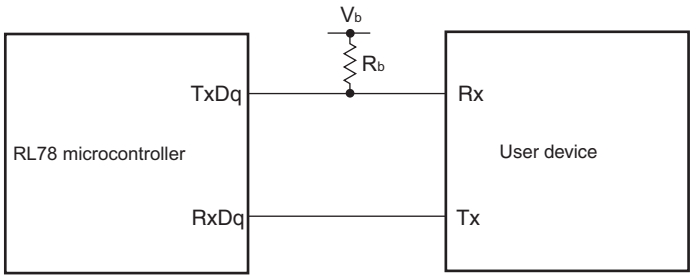

UART mode bit width (during communication at different potential) (reference)

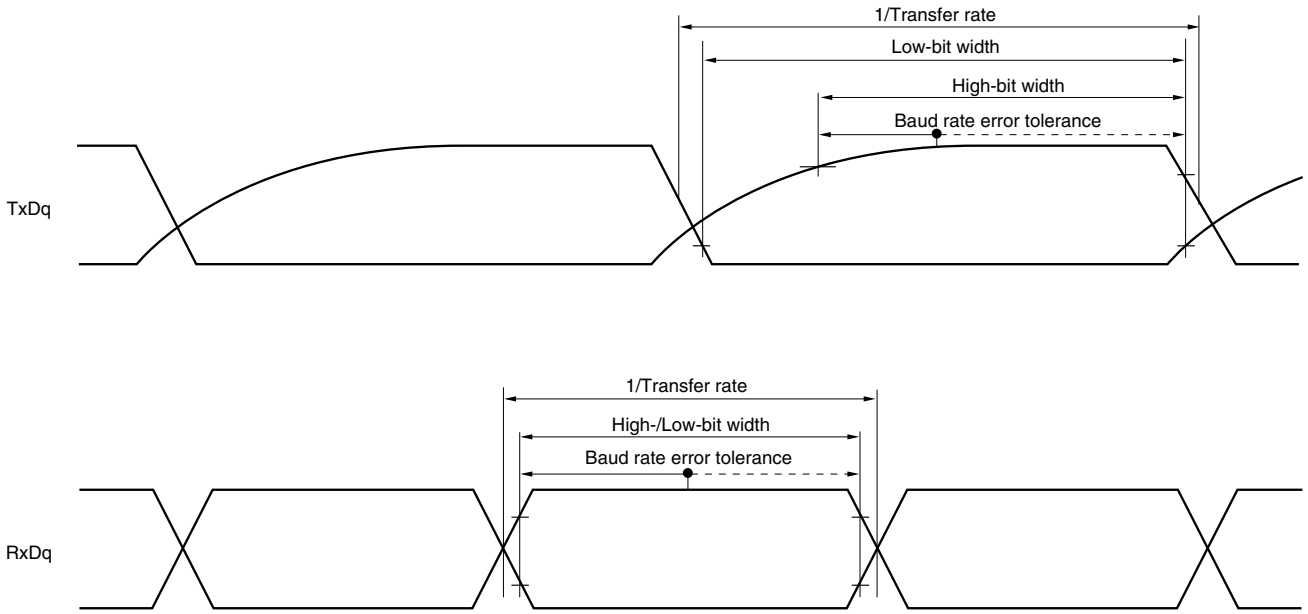

Remarks 1. R_b[Ω]:Communication line (TxDq) pull-up resistance,
C_b[F]: Communication line (TxDq) load capacitance, V_b[V]: Communication line voltage

2. q: UART number (q = 0 to 3), g: PIM and POM number (g = 0, 1, 8, 14)

3. f_{MCK}: Serial array unit operation clock frequency

(Operation clock to be set by the CKSmn bit of serial mode register mn (SMRmn).

m: Unit number, n: Channel number (mn = 00 to 03, 10 to 13))

4. UART2 cannot communicate at different potential when bit 1 (PIOR1) of peripheral I/O redirection register (PIOR) is 1.

(7) Communication at different potential (2.5 V, 3 V) (CSI mode) (master mode, SCKp... internal clock output, corresponding CSI00 only) (1/2)

(T_A = –40 to +85°C, 2.7 V ≤ EV_{DD0} = EV_{DD1} ≤ V_{DD} ≤ 5.5 V, V_{SS} = EV_{SS0} = EV_{SS1} = 0 V)

Parameter	Symbol	Conditions		HS (high-speed main) Mode		LS (low-speed main) Mode		LV (low-voltage main) Mode		Unit
				MIN.	MAX.	MIN.	MAX.	MIN.	MAX.	
SCKp cycle time	t_{KCY1}	$t_{KCY1} \geq 2/f_{CLK}$	4.0 V ≤ EV_{DD0} ≤ 5.5 V, 2.7 V ≤ V_b ≤ 4.0 V, C_b = 20 pF, R_b = 1.4 kΩ	200		1150		1150		ns
			2.7 V ≤ EV_{DD0} < 4.0 V, 2.3 V ≤ V_b ≤ 2.7 V, C_b = 20 pF, R_b = 2.7 kΩ	300		1150		1150		ns
SCKp high-level width	t_{KH1}	4.0 V ≤ EV_{DD0} ≤ 5.5 V, 2.7 V ≤ V_b ≤ 4.0 V, C_b = 20 pF, R_b = 1.4 kΩ		t_{KCY1}/2 – 50		t_{KCY1}/2 – 50		t_{KCY1}/2 – 50		ns
		2.7 V ≤ EV_{DD0} < 4.0 V, 2.3 V ≤ V_b ≤ 2.7 V, C_b = 20 pF, R_b = 2.7 kΩ		t_{KCY1}/2 – 120		t_{KCY1}/2 – 120		t_{KCY1}/2 – 120		ns
SCKp low-level width	t_{KL1}	4.0 V ≤ EV_{DD0} ≤ 5.5 V, 2.7 V ≤ V_b ≤ 4.0 V, C_b = 20 pF, R_b = 1.4 kΩ		t_{KCY1}/2 – 7		t_{KCY1}/2 – 50		t_{KCY1}/2 – 50		ns
		2.7 V ≤ EV_{DD0} < 4.0 V, 2.3 V ≤ V_b ≤ 2.7 V, C_b = 20 pF, R_b = 2.7 kΩ		t_{KCY1}/2 – 10		t_{KCY1}/2 – 50		t_{KCY1}/2 – 50		ns
SIp setup time (to SCKp↑) Note 1	t_{SIK1}	4.0 V ≤ EV_{DD0} ≤ 5.5 V, 2.7 V ≤ V_b ≤ 4.0 V, C_b = 20 pF, R_b = 1.4 kΩ		58		479		479		ns
		2.7 V ≤ EV_{DD0} < 4.0 V, 2.3 V ≤ V_b ≤ 2.7 V, C_b = 20 pF, R_b = 2.7 kΩ		121		479		479		ns
SIp hold time (from SCKp↑) Note 1	t_{KSI1}	4.0 V ≤ EV_{DD0} ≤ 5.5 V, 2.7 V ≤ V_b ≤ 4.0 V, C_b = 20 pF, R_b = 1.4 kΩ		10		10		10		ns
		2.7 V ≤ EV_{DD0} < 4.0 V, 2.3 V ≤ V_b ≤ 2.7 V, C_b = 20 pF, R_b = 2.7 kΩ		10		10		10		ns
Delay time from SCKp↓ to SOp output Note 1	t_{KSO1}	4.0 V ≤ EV_{DD0} ≤ 5.5 V, 2.7 V ≤ V_b ≤ 4.0 V, C_b = 20 pF, R_b = 1.4 kΩ			60		60		60	ns
		2.7 V ≤ EV_{DD0} < 4.0 V, 2.3 V ≤ V_b ≤ 2.7 V, C_b = 20 pF, R_b = 2.7 kΩ			130		130		130	ns

(**Notes, Caution,** and **Remarks** are listed on the next page.)

(7) Communication at different potential (2.5 V, 3 V) (CSI mode) (master mode, SCKp... internal clock output, corresponding CSI00 only) (2/2)

(T_A = –40 to +85°C, 2.7 V ≤ EV_{DD0} = EV_{DD1} ≤ V_{DD} ≤ 5.5 V, V_{SS} = EV_{SS0} = EV_{SS1} = 0 V)

Parameter	Symbol	Conditions	HS (high-speed main) Mode		LS (low-speed main) Mode		LV (low-voltage main) Mode		Unit
			MIN.	MAX.	MIN.	MAX.	MIN.	MAX.	
SIp setup time (to SCKp↓) Note 2	t_{SIK1}	4.0 V ≤ EV_{DD0} ≤ 5.5 V, 2.7 V ≤ V_b ≤ 4.0 V, C_b = 20 pF, R_b = 1.4 kΩ	23		110		110		ns
		2.7 V ≤ EV_{DD0} < 4.0 V, 2.3 V ≤ V_b ≤ 2.7 V, C_b = 20 pF, R_b = 2.7 kΩ	33		110		110		ns
SIp hold time (from SCKp↓) Note 2	t_{KSI1}	4.0 V ≤ EV_{DD0} ≤ 5.5 V, 2.7 V ≤ V_b ≤ 4.0 V, C_b = 20 pF, R_b = 1.4 kΩ	10		10		10		ns
		2.7 V ≤ EV_{DD0} < 4.0 V, 2.3 V ≤ V_b ≤ 2.7 V, C_b = 20 pF, R_b = 2.7 kΩ	10		10		10		ns
Delay time from SCKp↑ to SOp output Note 2	t_{KSO1}	4.0 V ≤ EV_{DD0} ≤ 5.5 V, 2.7 V ≤ V_b ≤ 4.0 V, C_b = 20 pF, R_b = 1.4 kΩ		10		10		10	ns
		2.7 V ≤ EV_{DD0} < 4.0 V, 2.3 V ≤ V_b ≤ 2.7 V, C_b = 20 pF, R_b = 2.7 kΩ		10		10		10	ns

Notes 1. When DAPmn = 0 and CKPmn = 0, or DAPmn = 1 and CKPmn = 1.

2. When DAPmn = 0 and CKPmn = 1, or DAPmn = 1 and CKPmn = 0.

Caution Select the TTL input buffer for the SIp pin and the N-ch open drain output (V_{DD} tolerance (When 20- to 52-pin products)/EV_{DD} tolerance (When 64- to 128-pin products)) mode for the SOp pin and SCKp pin by using port input mode register g (PIMg) and port output mode register g (POMg). For V_{IH} and V_{IL}, see the DC characteristics with TTL input buffer selected.

Remarks 1. R_b[Ω]:Communication line (SCKp, SOp) pull-up resistance, C_b[F]: Communication line (SCKp, SOp) load capacitance, V_b[V]: Communication line voltage

2. p: CSI number (p = 00), m: Unit number (m = 0), n: Channel number (n = 0), g: PIM and POM number (g = 1)

3. f_{MCK}: Serial array unit operation clock frequency

(Operation clock to be set by the CKSmn bit of serial mode register mn (SMRmn). m: Unit number, n: Channel number (mn = 00))

4. This value is valid only when CSI00's peripheral I/O redirect function is not used.

(8) Communication at different potential (1.8 V, 2.5 V, 3 V) (CSI mode) (master mode, SCKp... internal clock output) (1/3)

(T_A = –40 to +85°C, 1.8 V ≤ EV_{DD0} = EV_{DD1} ≤ V_{DD} ≤ 5.5 V, V_{SS} = EV_{SS0} = EV_{SS1} = 0 V)

Parameter	Symbol	Conditions		HS (high-speed main) Mode		LS (low-speed main) Mode		LV (low-voltage main) Mode		Unit
				MIN.	MAX.	MIN.	MAX.	MIN.	MAX.	
SCKp cycle time	t_{KCY1}	t_{KCY1} ≥ 4/f_{CLK}	4.0 V ≤ EV_{DD0} ≤ 5.5 V, 2.7 V ≤ V_b ≤ 4.0 V, C_b = 30 pF, R_b = 1.4 kΩ	300		1150		1150		ns
			2.7 V ≤ EV_{DD0} < 4.0 V, 2.3 V ≤ V_b ≤ 2.7 V, C_b = 30 pF, R_b = 2.7 kΩ	500		1150		1150		ns
			1.8 V ≤ EV_{DD0} < 3.3 V, 1.6 V ≤ V_b ≤ 2.0 V [Note], C_b = 30 pF, R_b = 5.5 kΩ	1150		1150		1150		ns
SCKp high-level width	t_{KH1}	4.0 V ≤ EV_{DD0} ≤ 5.5 V, 2.7 V ≤ V_b ≤ 4.0 V, C_b = 30 pF, R_b = 1.4 kΩ		t_{KCY1}/2 – 75		t_{KCY1}/2 – 75		t_{KCY1}/2 – 75		ns
		2.7 V ≤ EV_{DD0} < 4.0 V, 2.3 V ≤ V_b ≤ 2.7 V, C_b = 30 pF, R_b = 2.7 kΩ		t_{KCY1}/2 – 170		t_{KCY1}/2 – 170		t_{KCY1}/2 – 170		ns
		1.8 V ≤ EV_{DD0} < 3.3 V, 1.6 V ≤ V_b ≤ 2.0 V [Note], C_b = 30 pF, R_b = 5.5 kΩ		t_{KCY1}/2 – 458		t_{KCY1}/2 – 458		t_{KCY1}/2 – 458		ns
SCKp low-level width	t_{KL1}	4.0 V ≤ EV_{DD0} ≤ 5.5 V, 2.7 V ≤ V_b ≤ 4.0 V, C_b = 30 pF, R_b = 1.4 kΩ		t_{KCY1}/2 – 12		t_{KCY1}/2 – 50		t_{KCY1}/2 – 50		ns
		2.7 V ≤ EV_{DD0} < 4.0 V, 2.3 V ≤ V_b ≤ 2.7 V, C_b = 30 pF, R_b = 2.7 kΩ		t_{KCY1}/2 – 18		t_{KCY1}/2 – 50		t_{KCY1}/2 – 50		ns
		1.8 V ≤ EV_{DD0} < 3.3 V, 1.6 V ≤ V_b ≤ 2.0 V [Note], C_b = 30 pF, R_b = 5.5 kΩ		t_{KCY1}/2 – 50		t_{KCY1}/2 – 50		t_{KCY1}/2 – 50		ns

Note Use it with EV_{DD0} ≥ V_b.

Caution Select the TTL input buffer for the SIp pin and the N-ch open drain output (V_{DD} tolerance (When 20- to 52-pin products)/EV_{DD} tolerance (When 64- to 128-pin products)) mode for the SOp pin and SCKp pin by using port input mode register g (PIMg) and port output mode register g (POMg). For V_{IH} and V_{IL}, see the DC characteristics with TTL input buffer selected.

(**Remarks** are listed two pages after the next page.)

(8) Communication at different potential (1.8 V, 2.5 V, 3 V) (CSI mode) (master mode, SCKp... internal clock output) (2/3)

(T_A = –40 to +85°C, 1.8 V ≤ EV_{DD0} = EV_{DD1} ≤ V_{DD} ≤ 5.5 V, V_{SS} = EV_{SS0} = EV_{SS1} = 0 V)

Parameter	Symbol	Conditions	HS (high-speed main) Mode		LS (low-speed main) Mode		LV (low-voltage main) Mode		Unit
			MIN.	MAX.	MIN.	MAX.	MIN.	MAX.	
SIp setup time (to SCKp↑) Note 1	t_{SIK1}	4.0 V ≤ EV_{DD0} ≤ 5.5 V, 2.7 V ≤ V_b ≤ 4.0 V, C_b = 30 pF, R_b = 1.4 kΩ	81		479		479		ns
		2.7 V ≤ EV_{DD0} < 4.0 V, 2.3 V ≤ V_b ≤ 2.7 V, C_b = 30 pF, R_b = 2.7 kΩ	177		479		479		ns
		1.8 V ≤ EV_{DD0} < 3.3 V, 1.6 V ≤ V_b ≤ 2.0 V Note 2, C_b = 30 pF, R_b = 5.5 kΩ	479		479		479		ns
SIp hold time (from SCKp↑) Note 1	t_{KSI1}	4.0 V ≤ EV_{DD0} ≤ 5.5 V, 2.7 V ≤ V_b ≤ 4.0 V, C_b = 30 pF, R_b = 1.4 kΩ	19		19		19		ns
		2.7 V ≤ EV_{DD0} < 4.0 V, 2.3 V ≤ V_b ≤ 2.7 V, C_b = 30 pF, R_b = 2.7 kΩ	19		19		19		ns
		1.8 V ≤ EV_{DD0} < 3.3 V, 1.6 V ≤ V_b ≤ 2.0 V Note 2, C_b = 30 pF, R_b = 5.5 kΩ	19		19		19		ns
Delay time from SCKp↓ to SOp output Note 1	t_{KSO1}	4.0 V ≤ EV_{DD0} ≤ 5.5 V, 2.7 V ≤ V_b ≤ 4.0 V, C_b = 30 pF, R_b = 1.4 kΩ		100		100		100	ns
		2.7 V ≤ EV_{DD0} < 4.0 V, 2.3 V ≤ V_b ≤ 2.7 V, C_b = 30 pF, R_b = 2.7 kΩ		195		195		195	ns
		1.8 V ≤ EV_{DD0} < 3.3 V, 1.6 V ≤ V_b ≤ 2.0 V Note 2, C_b = 30 pF, R_b = 5.5 kΩ		483		483		483	ns

Notes **1.** When DAPmn = 0 and CKPmn = 0, or DAPmn = 1 and CKPmn = 1.

2. Use it with EV_{DD0} ≥ V_b.

Caution **Select the TTL input buffer for the SIp pin and the N-ch open drain output (V_{DD} tolerance (When 20- to 52-pin products)/EV_{DD} tolerance (When 64- to 128-pin products)) mode for the SOp pin and SCKp pin by using port input mode register g (PIMg) and port output mode register g (POMg). For V_{IH} and V_{IL}, see the DC characteristics with TTL input buffer selected.**

(Remarks are listed on the page after the next page.)

(8) Communication at different potential (1.8 V, 2.5 V, 3 V) (CSI mode) (master mode, SCKp... internal clock output) (3/3)

(T_A = –40 to +85°C, 1.8 V ≤ EV_{DD0} = EV_{DD1} ≤ V_{DD} ≤ 5.5 V, V_{SS} = EV_{SS0} = EV_{SS1} = 0 V)

Parameter	Symbol	Conditions	HS (high-speed main) Mode		LS (low-speed main) Mode		LV (low-voltage main) Mode		Unit
			MIN.	MAX.	MIN.	MAX.	MIN.	MAX.	
SIp setup time (to SCKp↓) Note 1	t_{SIK1}	4.0 V ≤ EV_{DD0} ≤ 5.5 V, 2.7 V ≤ V_b ≤ 4.0 V, C_b = 30 pF, R_b = 1.4 kΩ	44		110		110		ns
		2.7 V ≤ EV_{DD0} < 4.0 V, 2.3 V ≤ V_b ≤ 2.7 V, C_b = 30 pF, R_b = 2.7 kΩ	44		110		110		ns
		1.8 V ≤ EV_{DD0} < 3.3 V, 1.6 V ≤ V_b ≤ 2.0 V Note 2, C_b = 30 pF, R_b = 5.5 kΩ	110		110		110		ns
SIp hold time (from SCKp↓) Note 1	t_{KSI1}	4.0 V ≤ EV_{DD0} ≤ 5.5 V, 2.7 V ≤ V_b ≤ 4.0 V, C_b = 30 pF, R_b = 1.4 kΩ	19		19		19		ns
		2.7 V ≤ EV_{DD0} < 4.0 V, 2.3 V ≤ V_b ≤ 2.7 V, C_b = 30 pF, R_b = 2.7 kΩ	19		19		19		ns
		1.8 V ≤ EV_{DD0} < 3.3 V, 1.6 V ≤ V_b ≤ 2.0 V Note 2, C_b = 30 pF, R_b = 5.5 kΩ	19		19		19		ns
Delay time from SCKp↑ to SOp output Note 1	t_{KSO1}	4.0 V ≤ EV_{DD0} ≤ 5.5 V, 2.7 V ≤ V_b ≤ 4.0 V, C_b = 30 pF, R_b = 1.4 kΩ		25		25		25	ns
		2.7 V ≤ EV_{DD0} < 4.0 V, 2.3 V ≤ V_b ≤ 2.7 V, C_b = 30 pF, R_b = 2.7 kΩ		25		25		25	ns
		1.8 V ≤ EV_{DD0} < 3.3 V, 1.6 V ≤ V_b ≤ 2.0 V Note 2, C_b = 30 pF, R_b = 5.5 kΩ		25		25		25	ns

Notes **1.** When DAPmn = 0 and CKPmn = 1, or DAPmn = 1 and CKPmn = 0.

2. Use it with EV_{DD0} ≥ V_b.

Caution **Select the TTL input buffer for the SIp pin and the N-ch open drain output (V_{DD} tolerance (When 20- to 52-pin products)/EV_{DD} tolerance (When 64- to 128-pin products)) mode for the SOp pin and SCKp pin by using port input mode register g (PIMg) and port output mode register g (POMg). For V_{IH} and V_{IL}, see the DC characteristics with TTL input buffer selected.**

(**Remarks** are listed on the next page.)

CSI mode connection diagram (during communication at different potential)

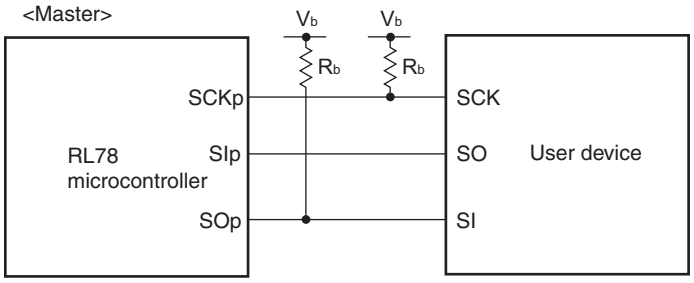

Remarks 1. R_b[Ω]:Communication line (SCKp, SOp) pull-up resistance, C_b[F]: Communication line (SCKp, SOp) load capacitance, V_b[V]: Communication line voltage

2. p: CSI number (p = 00, 01, 10, 20, 30, 31), m: Unit number , n: Channel number (mn = 00, 01, 02, 10, 12, 13), g: PIM and POM number (g = 0, 1, 4, 5, 8, 14)

3. f_{MCK}: Serial array unit operation clock frequency
(Operation clock to be set by the CKSmn bit of serial mode register mn (SMRmn).
m: Unit number, n: Channel number (mn = 00))

4. CSI01 of 48-, 52-, 64-pin products, and CSI11 and CSI21 cannot communicate at different potential. Use other CSI for communication at different potential.

CSI mode serial transfer timing (master mode) (during communication at different potential)
(When DAPmn = 0 and CKPmn = 0, or DAPmn = 1 and CKPmn = 1.)

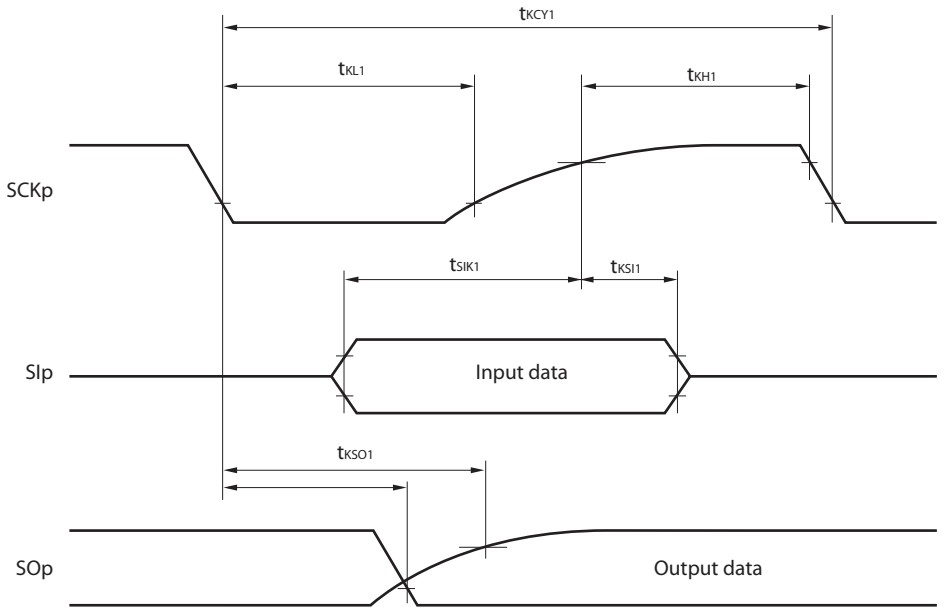

CSI mode serial transfer timing (master mode) (during communication at different potential)
(When DAPmn = 0 and CKPmn = 1, or DAPmn = 1 and CKPmn = 0.)

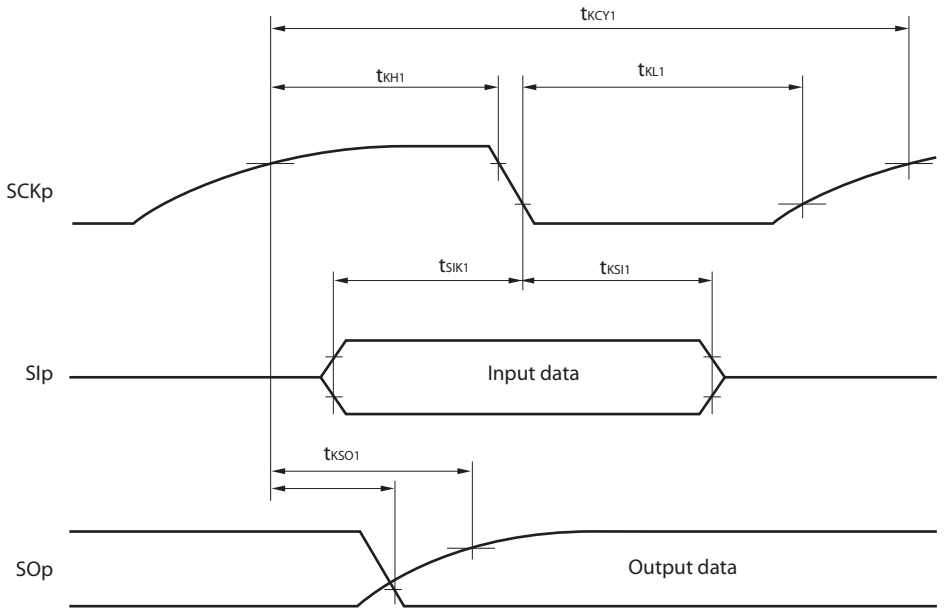

Remarks 1. p: CSI number (p = 00, 01, 10, 20, 30, 31), m: Unit number, n: Channel number (mn = 00, 01, 02, 10, 12, 13), g: PIM and POM number (g = 0, 1, 4, 5, 8, 14)

2. CSI01 of 48-, 52-, 64-pin products, and CSI11 and CSI21 cannot communicate at different potential. Use other CSI for communication at different potential.

(9) Communication at different potential (1.8 V, 2.5 V, 3 V) (CSI mode) (slave mode, SCKp... external clock input)

(T_A = –40 to +85°C, 1.8 V ≤ EV_{DD0} = EV_{DD1} ≤ V_{DD} ≤ 5.5 V, V_{SS} = EV_{SS0} = EV_{SS1} = 0 V) (1/2)

Parameter	Symbol	Conditions		HS (high-speed main) Mode		LS (low-speed main) Mode		LV (low-voltage main) Mode		Unit
				MIN.	MAX.	MIN.	MAX.	MIN.	MAX.	
SCKp cycle time Note 1	t_{KCY2}	4.0 V ≤ EV_{DD0} ≤ 5.5 V, 2.7 V ≤ V_b ≤ 4.0 V	24 MHz < f_{MCK}	14/f_{MCK}		—		—		ns
			20 MHz < f_{MCK} ≤ 24 MHz	12/f_{MCK}		—		—		ns
			8 MHz < f_{MCK} ≤ 20 MHz	10/f_{MCK}		—		—		ns
			4 MHz < f_{MCK} ≤ 8 MHz	8/f_{MCK}		16/f_{MCK}		—		ns
			f_{MCK} ≤ 4 MHz	6/f_{MCK}		10/f_{MCK}		10/f_{MCK}		ns
		2.7 V ≤ EV_{DD0} < 4.0 V, 2.3 V ≤ V_b ≤ 2.7 V	24 MHz < f_{MCK}	20/f_{MCK}		—		—		ns
			20 MHz < f_{MCK} ≤ 24 MHz	16/f_{MCK}		—		—		ns
			16 MHz < f_{MCK} ≤ 20 MHz	14/f_{MCK}		—		—		ns
			8 MHz < f_{MCK} ≤ 16 MHz	12/f_{MCK}		—		—		ns
			4 MHz < f_{MCK} ≤ 8 MHz	8/f_{MCK}		16/f_{MCK}		—		ns
			f_{MCK} ≤ 4 MHz	6/f_{MCK}		10/f_{MCK}		10/f_{MCK}		ns
		1.8 V ≤ EV_{DD0} < 3.3 V, 1.6 V ≤ V_b ≤ 2.0 V Note 2	24 MHz < f_{MCK}	48/f_{MCK}		—		—		ns
			20 MHz < f_{MCK} ≤ 24 MHz	36/f_{MCK}		—		—		ns
			16 MHz < f_{MCK} ≤ 20 MHz	32/f_{MCK}		—		—		ns
			8 MHz < f_{MCK} ≤ 16 MHz	26/f_{MCK}		—		—		ns
			4 MHz < f_{MCK} ≤ 8 MHz	16/f_{MCK}		16/f_{MCK}		—		ns
			f_{MCK} ≤ 4 MHz	10/f_{MCK}		10/f_{MCK}		10/f_{MCK}		ns

(**Notes** and **Caution** are listed on the next page, and **Remarks** are listed on the page after the next page.)

(9) Communication at different potential (1.8 V, 2.5 V, 3 V) (CSI mode) (slave mode, SCKp... external clock input)

(T_A = –40 to +85°C, 1.8 V ≤ EV_{DD0} = EV_{DD1} ≤ V_{DD} ≤ 5.5 V, V_{SS} = EV_{SS0} = EV_{SS1} = 0 V) (2/2)

Parameter	Symbol	Conditions	HS (high-speed main) Mode		LS (low-speed main) Mode		LV (low-voltage main) Mode		Unit
			MIN.	MAX.	MIN.	MAX.	MIN.	MAX.	
SCKp high-/low-level width	t_{KH2}, t_{KL2}	4.0 V ≤ EV_{DD0} ≤ 5.5 V, 2.7 V ≤ V_b ≤ 4.0 V	t_{KCY2}/2 – 12		t_{KCY2}/2 – 50		t_{KCY2}/2 – 50		ns
		2.7 V ≤ EV_{DD0} < 4.0 V, 2.3 V ≤ V_b ≤ 2.7 V	t_{KCY2}/2 – 18		t_{KCY2}/2 – 50		t_{KCY2}/2 – 50		ns
		1.8 V ≤ EV_{DD0} < 3.3 V, 1.6 V ≤ V_b ≤ 2.0 V Note 2	t_{KCY2}/2 – 50		t_{KCY2}/2 – 50		t_{KCY2}/2 – 50		ns
SIp setup time (to SCKp↑) Note 3	t_{SIK2}	4.0 V ≤ EV_{DD0} ≤ 5.5 V, 2.7 V ≤ V_b ≤ 4.0 V	1/f_{MCK} + 20		1/f_{MCK} + 30		1/f_{MCK} + 30		ns
		2.7 V ≤ EV_{DD0} < 4.0 V, 2.3 V ≤ V_b ≤ 2.7 V	1/f_{MCK} + 20		1/f_{MCK} + 30		1/f_{MCK} + 30		ns
		1.8 V ≤ EV_{DD0} < 3.3 V, 1.6 V ≤ V_b ≤ 2.0 V Note 2	1/f_{MCK} + 30		1/f_{MCK} + 30		1/f_{MCK} + 30		ns
SIp hold time (from SCKp↑) Note 4	t_{KSI2}		1/f_{MCK} + 31		1/f_{MCK} + 31		1/f_{MCK} + 31		ns
Delay time from SCKp↓ to SOp output Note 5	t_{KSO2}	4.0 V ≤ EV_{DD0} ≤ 5.5 V, 2.7 V ≤ V_b ≤ 4.0 V, C_b = 30 pF, R_b = 1.4 kΩ		2/f_{MCK} + 120		2/f_{MCK} + 573		2/f_{MCK} + 573	ns
		2.7 V ≤ EV_{DD0} < 4.0 V, 2.3 V ≤ V_b ≤ 2.7 V, C_b = 30 pF, R_b = 2.7 kΩ		2/f_{MCK} + 214		2/f_{MCK} + 573		2/f_{MCK} + 573	ns
		1.8 V ≤ EV_{DD0} < 3.3 V, 1.6 V ≤ V_b ≤ 2.0 V Note 2, C_b = 30 pF, R_b = 5.5 kΩ		2/f_{MCK} + 573		2/f_{MCK} + 573		2/f_{MCK} + 573	ns

Notes 1. Transfer rate in the SNOOZE mode : MAX. 1 Mbps

2. Use it with $EV_{DD0} \geq V_b$.

3. When DAPmn = 0 and CKPmn = 0, or DAPmn = 1 and CKPmn = 1. The SIp setup time becomes "to SCKp↓" when DAPmn = 0 and CKPmn = 1, or DAPmn = 1 and CKPmn = 0.

4. When DAPmn = 0 and CKPmn = 0, or DAPmn = 1 and CKPmn = 1. The SIp hold time becomes "from SCKp↓" when DAPmn = 0 and CKPmn = 1, or DAPmn = 1 and CKPmn = 0.

5. When DAPmn = 0 and CKPmn = 0, or DAPmn = 1 and CKPmn = 1. The delay time to SOp output becomes "from SCKp↑" when DAPmn = 0 and CKPmn = 1, or DAPmn = 1 and CKPmn = 0.

Caution Select the TTL input buffer for the SIp pin and the N-ch open drain output (V_{DD} tolerance (for the 20- to 52-pin products)/EV_{DD} tolerance (for the 64- to 128-pin products)) mode for the SOp pin and SCKp pin by using port input mode register g (PIMg) and port output mode register g (POMg). For V_{IH} and V_{IL}, see the DC characteristics with TTL input buffer selected.

(Remarks are listed on the next page.)

CSI mode connection diagram (during communication at different potential)

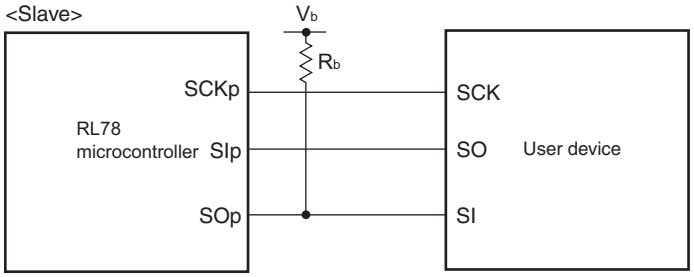

Remarks 1. R_b[Ω]:Communication line (SOp) pull-up resistance, C_b[F]: Communication line (SOp) load capacitance, V_b[V]: Communication line voltage

2. p: CSI number (p = 00, 01, 10, 20, 30, 31), m: Unit number, n: Channel number (mn = 00, 01, 02, 10, 12, 13), g: PIM and POM number (g = 0, 1, 4, 5, 8, 14)

3. f_{MCK}: Serial array unit operation clock frequency
(Operation clock to be set by the CKSmn bit of serial mode register mn (SMRmn).
m: Unit number, n: Channel number (mn = 00, 01, 02, 10, 12, 13))

4. CSI01 of 48-, 52-, 64-pin products, and CSI11 and CSI21 cannot communicate at different potential. Use other CSI for communication at different potential.

CSI mode serial transfer timing (slave mode) (during communication at different potential)
(When DAPmn = 0 and CKPmn = 0, or DAPmn = 1 and CKPmn = 1.)

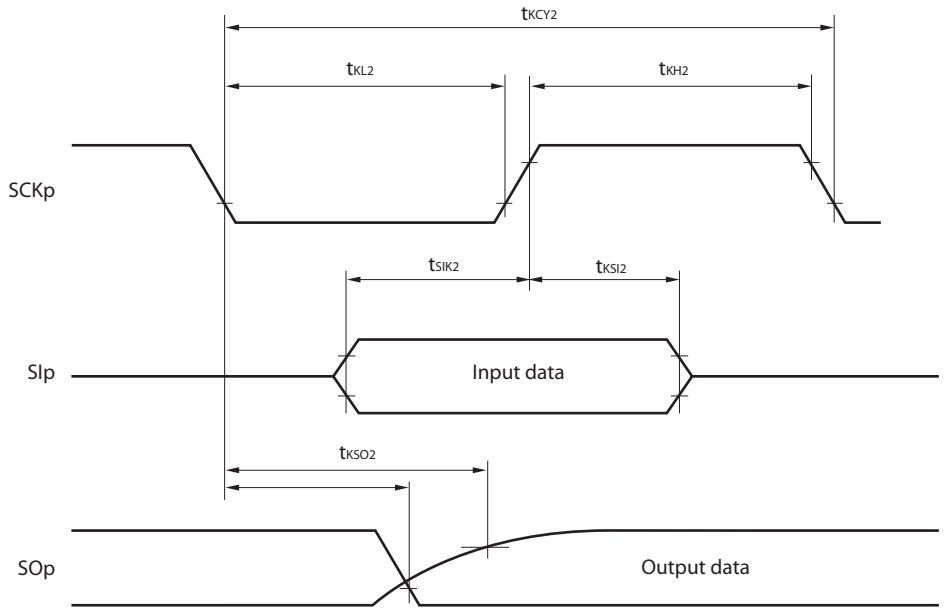

CSI mode serial transfer timing (slave mode) (during communication at different potential)
(When DAPmn = 0 and CKPmn = 1, or DAPmn = 1 and CKPmn = 0.)

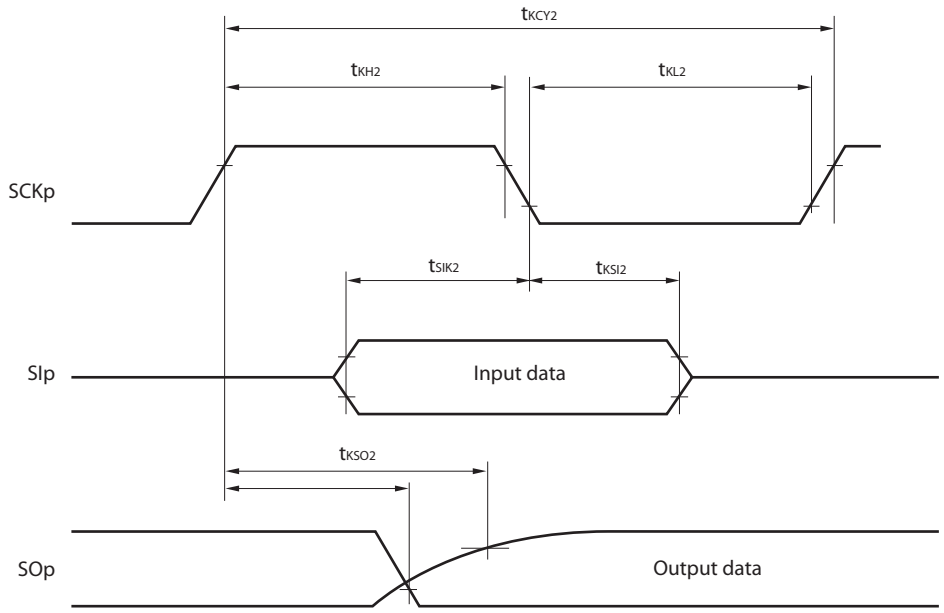

Remarks 1. p: CSI number (p = 00, 01, 10, 20, 30, 31), m: Unit number,
n: Channel number (mn = 00, 01, 02, 10, 12. 13), g: PIM and POM number (g = 0, 1, 4, 5, 8, 14)

2. CSI01 of 48-, 52-, 64-pin products, and CSI11 and CSI21 cannot communicate at different potential. Use other CSI for communication at different potential.

(10) Communication at different potential (1.8 V, 2.5 V, 3 V) (simplified I^2C mode) (1/2)

(T_A = –40 to +85°C, 1.8 V ≤ EV_{DD0} = EV_{DD1} ≤ V_{DD} ≤ 5.5 V, V_{SS} = EV_{SS0} = EV_{SS1} = 0 V)

Parameter	Symbol	Conditions	HS (high-speed main) Mode		LS (low-speed main) Mode		LV (low-voltage main) Mode		Unit
			MIN.	MAX.	MIN.	MAX.	MIN.	MAX.	
SCLr clock frequency	f_{SCL}	4.0 V ≤ EV_{DD0} ≤ 5.5 V, 2.7 V ≤ V_b ≤ 4.0 V, C_b = 50 pF, R_b = 2.7 kΩ		1000 Note 1		300 Note 1		300 Note 1	kHz
		2.7 V ≤ EV_{DD0} < 4.0 V, 2.3 V ≤ V_b ≤ 2.7 V, C_b = 50 pF, R_b = 2.7 kΩ		1000 Note 1		300 Note 1		300 Note 1	kHz
		4.0 V ≤ EV_{DD0} ≤ 5.5 V, 2.7 V ≤ V_b ≤ 4.0 V, C_b = 100 pF, R_b = 2.8 kΩ		400 Note 1		300 Note 1		300 Note 1	kHz
		2.7 V ≤ EV_{DD0} < 4.0 V, 2.3 V ≤ V_b ≤ 2.7 V, C_b = 100 pF, R_b = 2.7 kΩ		400 Note 1		300 Note 1		300 ote 1	kHz
		1.8 V ≤ EV_{DD0} < 3.3 V, 1.6 V ≤ V_b ≤ 2.0 V Note 2, C_b = 100 pF, R_b = 5.5 kΩ		300 Note 1		300 Note 1		300 Note 1	kHz
Hold time when SCLr = “L”	t_{LOW}	4.0 V ≤ EV_{DD0} ≤ 5.5 V, 2.7 V ≤ V_b ≤ 4.0 V, C_b = 50 pF, R_b = 2.7 kΩ	475		1550		1550		ns
		2.7 V ≤ EV_{DD0} < 4.0 V, 2.3 V ≤ V_b ≤ 2.7 V, C_b = 50 pF, R_b = 2.7 kΩ	475		1550		1550		ns
		4.0 V ≤ EV_{DD0} ≤ 5.5 V, 2.7 V ≤ V_b ≤ 4.0 V, C_b = 100 pF, R_b = 2.8 kΩ	1150		1550		1550		ns
		2.7 V ≤ EV_{DD0} < 4.0 V, 2.3 V ≤ V_b ≤ 2.7 V, C_b = 100 pF, R_b = 2.7 kΩ	1150		1550		1550		ns
		1.8 V ≤ EV_{DD0} < 3.3 V, 1.6 V ≤ V_b ≤ 2.0 V Note 2, C_b = 100 pF, R_b = 5.5 kΩ	1550		1550		1550		ns
Hold time when SCLr = “H”	t_{HIGH}	4.0 V ≤ EV_{DD0} ≤ 5.5 V, 2.7 V ≤ V_b ≤ 4.0 V, C_b = 50 pF, R_b = 2.7 kΩ	245		610		610		ns
		2.7 V ≤ EV_{DD0} < 4.0 V, 2.3 V ≤ V_b ≤ 2.7 V, C_b = 50 pF, R_b = 2.7 kΩ	200		610		610		ns
		4.0 V ≤ EV_{DD0} ≤ 5.5 V, 2.7 V ≤ V_b ≤ 4.0 V, C_b = 100 pF, R_b = 2.8 kΩ	675		610		610		ns
		2.7 V ≤ EV_{DD0} < 4.0 V, 2.3 V ≤ V_b ≤ 2.7 V, C_b = 100 pF, R_b = 2.7 kΩ	600		610		610		ns
		1.8 V ≤ EV_{DD0} < 3.3 V, 1.6 V ≤ V_b ≤ 2.0 V Note 2, C_b = 100 pF, R_b = 5.5 kΩ	610		610		610		ns

(10) Communication at different potential (1.8 V, 2.5 V, 3 V) (simplified I^2C mode) (2/2)

(T_A = –40 to +85°C, 1.8 V ≤ EV_{DD0} = EV_{DD1} ≤ V_{DD} ≤ 5.5 V, V_{SS} = EV_{SS0} = EV_{SS1} = 0 V)

Parameter	Symbol	Conditions	HS (high-speed main) Mode		LS (low-speed main) Mode		LV (low-voltage main) Mode		Unit
			MIN.	MAX.	MIN.	MAX.	MIN.	MAX.	
Data setup time (reception)	$t_{SU:DAT}$	4.0 V ≤ EV_{DD0} ≤ 5.5 V, 2.7 V ≤ V_b ≤ 4.0 V, C_b = 50 pF, R_b = 2.7 kΩ	1/f_{MCK} + 135 Note 3		1/f_{MCK} + 190 Note 3		1/f_{MCK} + 190 Note 3		kHz
		2.7 V ≤ EV_{DD0} < 4.0 V, 2.3 V ≤ V_b ≤ 2.7 V, C_b = 50 pF, R_b = 2.7 kΩ	1/f_{MCK} + 135 Note 3		1/f_{MCK} + 190 Note 3		1/f_{MCK} + 190 Note 3		kHz
		4.0 V ≤ EV_{DD0} ≤ 5.5 V, 2.7 V ≤ V_b ≤ 4.0 V, C_b = 100 pF, R_b = 2.8 kΩ	1/f_{MCK} + 190 Note 3		1/f_{MCK} + 190 Note 3		1/f_{MCK} + 190 Note 3		kHz
		2.7 V ≤ EV_{DD0} < 4.0 V, 2.3 V ≤ V_b ≤ 2.7 V, C_b = 100 pF, R_b = 2.7 kΩ	1/f_{MCK} + 190 Note 3		1/f_{MCK} + 190 Note 3		1/f_{MCK} + 190 Note 3		kHz
		1.8 V ≤ EV_{DD0} < 3.3 V, 1.6 V ≤ V_b ≤ 2.0 V Note 2, C_b = 100 pF, R_b = 5.5 kΩ	1/f_{MCK} + 190 Note 3		1/f_{MCK} + 190 Note 3		1/f_{MCK} + 190 Note 3		kHz
Data hold time (transmission)	$t_{HD:DAT}$	4.0 V ≤ EV_{DD0} ≤ 5.5 V, 2.7 V ≤ V_b ≤ 4.0 V, C_b = 50 pF, R_b = 2.7 kΩ	0	305	0	305	0	305	ns
		2.7 V ≤ EV_{DD0} < 4.0 V, 2.3 V ≤ V_b ≤ 2.7 V, C_b = 50 pF, R_b = 2.7 kΩ	0	305	0	305	0	305	ns
		4.0 V ≤ EV_{DD0} ≤ 5.5 V, 2.7 V ≤ V_b ≤ 4.0 V, C_b = 100 pF, R_b = 2.8 kΩ	0	355	0	355	0	355	ns
		2.7 V ≤ EV_{DD0} < 4.0 V, 2.3 V ≤ V_b ≤ 2.7 V, C_b = 100 pF, R_b = 2.7 kΩ	0	355	0	355	0	355	ns
		1.8 V ≤ EV_{DD0} < 3.3 V, 1.6 V ≤ V_b ≤ 2.0 V Note 2, C_b = 100 pF, R_b = 5.5 kΩ	0	405	0	405	0	405	ns

Notes 1. The value must also be equal to or less than f_{MCK}/4.

2. Use it with $EV_{DD0} \geq V_b$.

3. Set the f_{MCK} value to keep the hold time of SCLr = "L" and SCLr = "H".

Caution Select the TTL input buffer and the N-ch open drain output (V_{DD} tolerance (for the 20- to 52-pin products)/EV_{DD} tolerance (for the 64- to 128-pin products)) mode for the SDAr pin and the N-ch open drain output (V_{DD} tolerance (for the 20- to 52-pin products)/EV_{DD} tolerance (for the 64- to 128-pin products)) mode for the SCLr pin by using port input mode register g (PIMg) and port output mode register g (POMg). For V_{IH} and V_{IL}, see the DC characteristics with TTL input buffer selected.

(**Remarks** are listed on the next page.)

Simplified I^2C mode connection diagram (during communication at different potential)

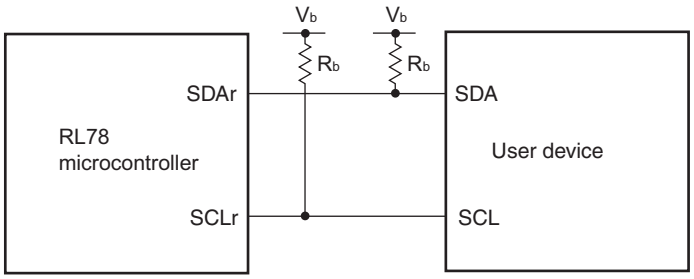

Simplified I^2C mode serial transfer timing (during communication at different potential)

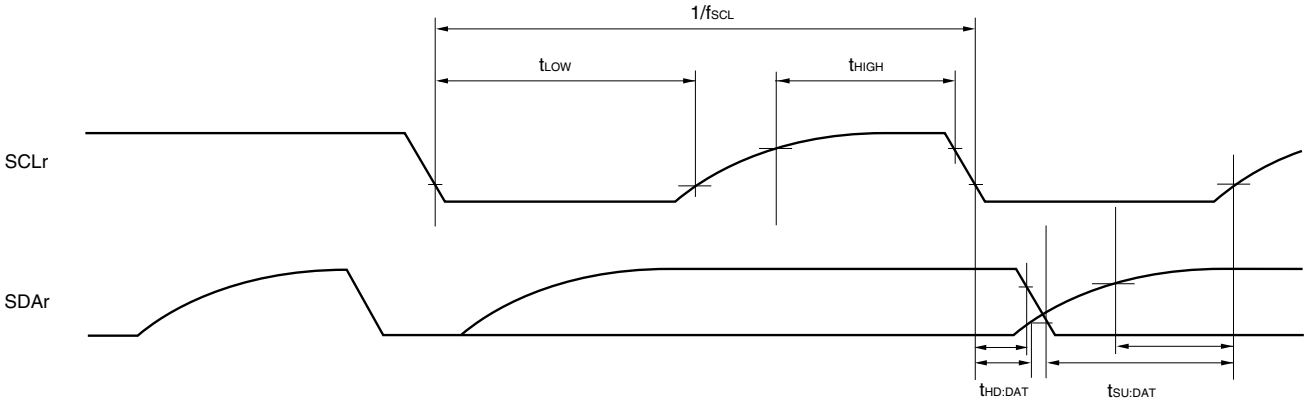

Remarks 1. R_b[Ω]:Communication line (SDAr, SCLr) pull-up resistance, C_b[F]: Communication line (SDAr, SCLr) load capacitance, V_b[V]: Communication line voltage

2. r: IIC number (r = 00, 01, 10, 20, 30, 31), g: PIM, POM number (g = 0, 1, 4, 5, 8, 14)

3. f_{MCK}: Serial array unit operation clock frequency

(Operation clock to be set by the CKSmn bit of serial mode register mn (SMRmn). m: Unit number, n: Channel number (mn = 00, 01, 02, 10, 12, 13)

2.5.2 Serial interface IICA

(1) I^2C standard mode

(T_A = –40 to +85°C, 1.6 V ≤ EV_{DD0} = EV_{DD1} ≤ V_{DD} ≤ 5.5 V, V_{SS} = EV_{SS0} = EV_{SS1} = 0 V)

Parameter	Symbol	Conditions		HS (high-speed main) Mode		LS (low-speed main) Mode		LV (low-voltage main) Mode		Unit
				MIN.	MAX.	MIN.	MAX.	MIN.	MAX.	
SCLA0 clock frequency	f_{SCL}	Standard mode: f_{CLK} ≥ 1 MHz	2.7 V ≤ EV_{DD0} ≤ 5.5 V	0	100	0	100	0	100	kHz
			1.8 V ≤ EV_{DD0} ≤ 5.5 V	0	100	0	100	0	100	kHz
			1.7 V ≤ EV_{DD0} ≤ 5.5 V	0	100	0	100	0	100	kHz
			1.6 V ≤ EV_{DD0} ≤ 5.5 V	—		0	100	0	100	kHz
Setup time of restart condition	$t_{SU:STA}$	2.7 V ≤ EV_{DD0} ≤ 5.5 V		4.7		4.7		4.7		μs
		1.8 V ≤ EV_{DD0} ≤ 5.5 V		4.7		4.7		4.7		μs
		1.7 V ≤ EV_{DD0} ≤ 5.5 V		4.7		4.7		4.7		μs
		1.6 V ≤ EV_{DD0} ≤ 5.5 V		—		4.7		4.7		μs
Hold time[Note 1]	$t_{HD:STA}$	2.7 V ≤ EV_{DD0} ≤ 5.5 V		4.0		4.0		4.0		μs
		1.8 V ≤ EV_{DD0} ≤ 5.5 V		4.0		4.0		4.0		μs
		1.7 V ≤ EV_{DD0} ≤ 5.5 V		4.0		4.0		4.0		μs
		1.6 V ≤ EV_{DD0} ≤ 5.5 V		—		4.0		4.0		μs
Hold time when SCLA0 = "L"	t_{LOW}	2.7 V ≤ EV_{DD0} ≤ 5.5 V		4.7		4.7		4.7		μs
		1.8 V ≤ EV_{DD0} ≤ 5.5 V		4.7		4.7		4.7		μs
		1.7 V ≤ EV_{DD0} ≤ 5.5 V		4.7		4.7		4.7		μs
		1.6 V ≤ EV_{DD0} ≤ 5.5 V		—		4.7		4.7		μs
Hold time when SCLA0 = "H"	t_{HIGH}	2.7 V ≤ EV_{DD0} ≤ 5.5 V		4.0		4.0		4.0		μs
		1.8 V ≤ EV_{DD0} ≤ 5.5 V		4.0		4.0		4.0		μs
		1.7 V ≤ EV_{DD0} ≤ 5.5 V		4.0		4.0		4.0		μs
		1.6 V ≤ EV_{DD0} ≤ 5.5 V		—		4.0		4.0		μs
Data setup time (reception)	$t_{SU:DAT}$	2.7 V ≤ EV_{DD0} ≤ 5.5 V		250		250		250		ns
		1.8 V ≤ EV_{DD0} ≤ 5.5 V		250		250		250		ns
		1.7 V ≤ EV_{DD0} ≤ 5.5 V		250		250		250		ns
		1.6 V ≤ EV_{DD0} ≤ 5.5 V		—		250		250		ns
Data hold time (transmission)[Note 2]	$t_{HD:DAT}$	2.7 V ≤ EV_{DD0} ≤ 5.5 V		0	3.45	0	3.45	0	3.45	μs
		1.8 V ≤ EV_{DD0} ≤ 5.5 V		0	3.45	0	3.45	0	3.45	μs
		1.7 V ≤ EV_{DD0} ≤ 5.5 V		0	3.45	0	3.45	0	3.45	μs
		1.6 V ≤ EV_{DD0} ≤ 5.5 V		—		0	3.45	0	3.45	μs
Setup time of stop condition	$t_{SU:STO}$	2.7 V ≤ EV_{DD0} ≤ 5.5 V		4.0		4.0		4.0		μs
		1.8 V ≤ EV_{DD0} ≤ 5.5 V		4.0		4.0		4.0		μs
		1.7 V ≤ EV_{DD0} ≤ 5.5 V		4.0		4.0		4.0		μs
		1.6 V ≤ EV_{DD0} ≤ 5.5 V		—		4.0		4.0		μs
Bus-free time	t_{BUF}	2.7 V ≤ EV_{DD0} ≤ 5.5 V		4.7		4.7		4.7		μs
		1.8 V ≤ EV_{DD0} ≤ 5.5 V		4.7		4.7		4.7		μs
		1.7 V ≤ EV_{DD0} ≤ 5.5 V		4.7		4.7		4.7		μs
		1.6 V ≤ EV_{DD0} ≤ 5.5 V		—		4.7		4.7		μs

(**Notes**, **Caution** and **Remark** are listed on the next page.)

Notes 1. The first clock pulse is generated after this period when the start/restart condition is detected.

<R> **2.** The maximum value (MAX.) of $t_{HD:DAT}$ is during normal transfer and a wait state is inserted in the ACK (acknowledge) timing.

Caution The values in the above table are applied even when bit 2 (PIOR2) in the peripheral I/O redirection register (PIOR) is 1. At this time, the pin characteristics (I_{OH1}, I_{OL1}, V_{OH1}, V_{OL1}) must satisfy the values in the redirect destination.

Remark The maximum value of Cb (communication line capacitance) and the value of Rb (communication line pull-up resistor) at that time in each mode are as follows.

Standard mode: C_b = 400 pF, R_b = 2.7 kΩ

(2) I^2C fast mode

(T_A = –40 to +85°C, 1.6 V ≤ EV_{DD0} = EV_{DD1} ≤ V_{DD} ≤ 5.5 V, V_{SS} = EV_{SS0} = EV_{SS1} = 0 V)

Parameter	Symbol	Conditions		HS (high-speed main) Mode		LS (low-speed main) Mode		LV (low-voltage main) Mode		Unit
				MIN.	MAX.	MIN.	MAX.	MIN.	MAX.	
SCLA0 clock frequency	f_{SCL}	Fast mode: f_{CLK} ≥ 3.5 MHz	2.7 V ≤ EV_{DD0} ≤ 5.5 V	0	400	0	400	0	400	kHz
			1.8 V ≤ EV_{DD0} ≤ 5.5 V	0	400	0	400	0	400	kHz
Setup time of restart condition	$t_{SU:STA}$	2.7 V ≤ EV_{DD0} ≤ 5.5 V		0.6		0.6		0.6		μs
		1.8 V ≤ EV_{DD0} ≤ 5.5 V		0.6		0.6		0.6		μs
Hold time[Note 1]	$t_{HD:STA}$	2.7 V ≤ EV_{DD0} ≤ 5.5 V		0.6		0.6		0.6		μs
		1.8 V ≤ EV_{DD0} ≤ 5.5 V		0.6		0.6		0.6		μs
Hold time when SCLA0 = “L”	t_{LOW}	2.7 V ≤ EV_{DD0} ≤ 5.5 V		1.3		1.3		1.3		μs
		1.8 V ≤ EV_{DD0} ≤ 5.5 V		1.3		1.3		1.3		μs
Hold time when SCLA0 = “H”	t_{HIGH}	2.7 V ≤ EV_{DD0} ≤ 5.5 V		0.6		0.6		0.6		μs
		1.8 V ≤ EV_{DD0} ≤ 5.5 V		0.6		0.6		0.6		μs
Data setup time (reception)	$t_{SU:DAT}$	2.7 V ≤ EV_{DD0} ≤ 5.5 V		100		100		100		μs
		1.8 V ≤ EV_{DD0} ≤ 5.5 V		100		100		100		μs
Data hold time (transmission)[Note 2]	$t_{HD:DAT}$	2.7 V ≤ EV_{DD0} ≤ 5.5 V		0	0.9	0	0.9	0	0.9	μs
		1.8 V ≤ EV_{DD0} ≤ 5.5 V		0	0.9	0	0.9	0	0.9	μs
Setup time of stop condition	$t_{SU:STO}$	2.7 V ≤ EV_{DD0} ≤ 5.5 V		0.6		0.6		0.6		μs
		1.8 V ≤ EV_{DD0} ≤ 5.5 V		0.6		0.6		0.6		μs
Bus-free time	t_{BUF}	2.7 V ≤ EV_{DD0} ≤ 5.5 V		1.3		1.3		1.3		μs
		1.8 V ≤ EV_{DD0} ≤ 5.5 V		1.3		1.3		1.3		μs

Notes 1. The first clock pulse is generated after this period when the start/restart condition is detected.

<R> **2.** The maximum value (MAX.) of $t_{HD:DAT}$ is during normal transfer and a wait state is inserted in the ACK (acknowledge) timing.

Caution The values in the above table are applied even when bit 2 (PIOR2) in the peripheral I/O redirection register (PIOR) is 1. At this time, the pin characteristics (I_{OH1}, I_{OL1}, V_{OH1}, V_{OL1}) must satisfy the values in the redirect destination.

Remark The maximum value of Cb (communication line capacitance) and the value of Rb (communication line pull-up resistor) at that time in each mode are as follows.

Fast mode: C_b = 320 pF, R_b = 1.1 kΩ

(3) I^2C fast mode plus

(T_A = –40 to +85°C, 1.6 V ≤ EV_{DD0} = EV_{DD1} ≤ V_{DD} ≤ 5.5 V, V_{SS} = EV_{SS0} = EV_{SS1} = 0 V)

Parameter	Symbol	Conditions		HS (high-speed main) Mode		LS (low-speed main) Mode		LV (low-voltage main) Mode		Unit
				MIN.	MAX.	MIN.	MAX.	MIN.	MAX.	
SCLA0 clock frequency	f_{SCL}	Fast mode plus: f_{CLK} ≥ 10 MHz	2.7 V ≤ EV_{DD0} ≤ 5.5 V	0	1000	—		—		kHz
Setup time of restart condition	$t_{SU:STA}$	2.7 V ≤ EV_{DD0} ≤ 5.5 V		0.26		—		—		μs
Hold time[Note 1]	$t_{HD:STA}$	2.7 V ≤ EV_{DD0} ≤ 5.5 V		0.26		—		—		μs
Hold time when SCLA0 = "L"	t_{LOW}	2.7 V ≤ EV_{DD0} ≤ 5.5 V		0.5		—		—		μs
Hold time when SCLA0 = "H"	t_{HIGH}	2.7 V ≤ EV_{DD0} ≤ 5.5 V		0.26		—		—		μs
Data setup time (reception)	$t_{SU:DAT}$	2.7 V ≤ EV_{DD0} ≤ 5.5 V		50		—		—		μs
Data hold time (transmission)[Note 2]	$t_{HD:DAT}$	2.7 V ≤ EV_{DD0} ≤ 5.5 V		0	0.45	—		—		μs
Setup time of stop condition	$t_{SU:STO}$	2.7 V ≤ EV_{DD0} ≤ 5.5 V		0.26		—		—		μs
Bus-free time	t_{BUF}	2.7 V ≤ EV_{DD0} ≤ 5.5 V		0.5		—		—		μs

Notes 1. The first clock pulse is generated after this period when the start/restart condition is detected.

<R> **2.** The maximum value (MAX.) of $t_{HD:DAT}$ is during normal transfer and a wait state is inserted in the ACK (acknowledge) timing.

Caution The values in the above table are applied even when bit 2 (PIOR2) in the peripheral I/O redirection register (PIOR) is 1. At this time, the pin characteristics (I_{OH1}, I_{OL1}, V_{OH1}, V_{OL1}) must satisfy the values in the redirect destination.

Remark The maximum value of Cb (communication line capacitance) and the value of Rb (communication line pull-up resistor) at that time in each mode are as follows.

Fast mode plus: C_b = 120 pF, R_b = 1.1 kΩ

IICA serial transfer timing

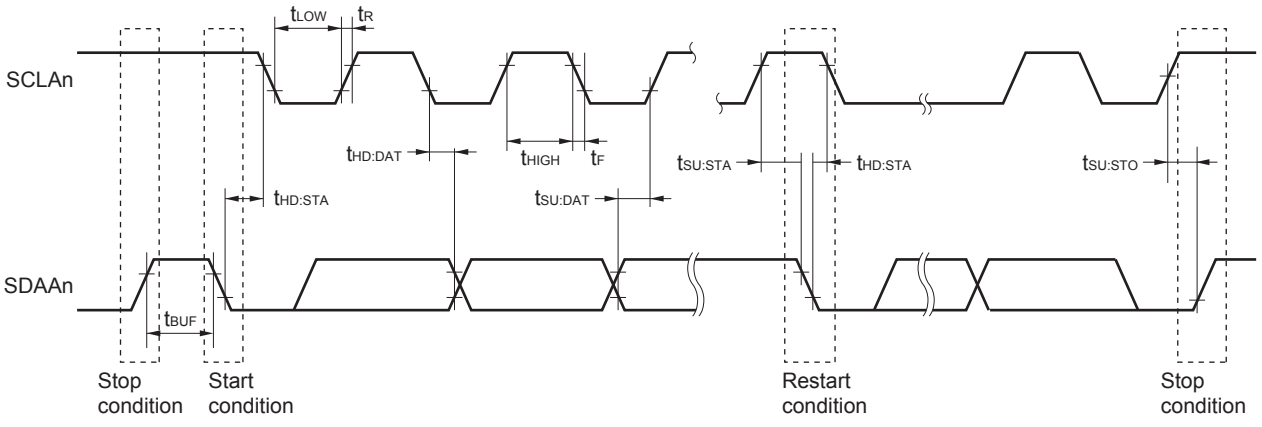

Remark n = 0, 1

2.6 Analog Characteristics

2.6.1 A/D converter characteristics

Classification of A/D converter characteristics

Input channel	Reference Voltage		
	Reference voltage (+) = AV_{REFP} Reference voltage (–) = AV_{REFM}	Reference voltage (+) = V_{DD} Reference voltage (–) = V_{SS}	Reference voltage (+) = V_{BGR} Reference voltage (–) = AV_{REFM}
ANI0 to ANI14	Refer to **2.6.1 (1)**.	Refer to **2.6.1 (3)**.	Refer to **2.6.1 (4)**.
ANI16 to ANI26	Refer to **2.6.1 (2)**.		
Internal reference voltage Temperature sensor output voltage	Refer to **2.6.1 (1)**.		–

(1) When reference voltage (+)= AV_{REFP}/ANI0 (ADREFP1 = 0, ADREFP0 = 1), reference voltage (–) = AV_{REFM}/ANI1 (ADREFM = 1), target pin : ANI2 to ANI14, internal reference voltage, and temperature sensor output voltage

(T_A = –40 to +85°C, 1.6 V ≤ AV_{REFP} ≤ V_{DD} ≤ 5.5 V, V_{SS} = 0 V, Reference voltage (+) = AV_{REFP}, Reference voltage (–) = AV_{REFM} = 0 V)

Parameter	Symbol	Conditions		MIN.	TYP.	MAX.	Unit
Resolution	RES			8		10	bit
Overall error[Note 1]	AINL	10-bit resolution AV_{REFP} = V_{DD} [Note 3]	1.8 V ≤ AV_{REFP} ≤ 5.5 V		1.2	±3.5	LSB
			1.6 V ≤ AV_{REFP} ≤ 5.5 V [Note 4]		1.2	±7.0	LSB
Conversion time	t_{CONV}	10-bit resolution Target pin: ANI2 to ANI14	3.6 V ≤ V_{DD} ≤ 5.5 V	2.125		39	μs
			2.7 V ≤ V_{DD} ≤ 5.5 V	3.1875		39	μs
			1.8 V ≤ V_{DD} ≤ 5.5 V	17		39	μs
			1.6 V ≤ V_{DD} ≤ 5.5 V	57		95	μs
		10-bit resolution Target pin: Internal reference voltage, and temperature sensor output voltage (HS (high-speed main) mode)	3.6 V ≤ V_{DD} ≤ 5.5 V	2.375		39	μs
			2.7 V ≤ V_{DD} ≤ 5.5 V	3.5625		39	μs
			2.4 V ≤ V_{DD} ≤ 5.5 V	17		39	μs
Zero-scale error[Notes 1, 2]	E_{ZS}	10-bit resolution AV_{REFP} = V_{DD} [Note 3]	1.8 V ≤ AV_{REFP} ≤ 5.5 V			±0.25	%FSR
			1.6 V ≤ AV_{REFP} ≤ 5.5 V [Note 4]			±0.50	%FSR
Full-scale error[Notes 1, 2]	E_{FS}	10-bit resolution AV_{REFP} = V_{DD} [Note 3]	1.8 V ≤ AV_{REFP} ≤ 5.5 V			±0.25	%FSR
			1.6 V ≤ AV_{REFP} ≤ 5.5 V [Note 4]			±0.50	%FSR
Integral linearity error[Note 1]	ILE	10-bit resolution AV_{REFP} = V_{DD} [Note 3]	1.8 V ≤ AV_{REFP} ≤ 5.5 V			±2.5	LSB
			1.6 V ≤ AV_{REFP} ≤ 5.5 V [Note 4]			±5.0	LSB
Differential linearity error [Note 1]	DLE	10-bit resolution AV_{REFP} = V_{DD} [Note 3]	1.8 V ≤ AV_{REFP} ≤ 5.5 V			±1.5	LSB
			1.6 V ≤ AV_{REFP} ≤ 5.5 V [Note 4]			±2.0	LSB
Analog input voltage	V_{AIN}	ANI2 to ANI14		0		AV_{REFP}	V
		Internal reference voltage (2.4 V ≤ V_{DD} ≤ 5.5 V, HS (high-speed main) mode)		V_{BGR} [Note 5]			V
		Temperature sensor output voltage (2.4 V ≤ V_{DD} ≤ 5.5 V, HS (high-speed main) mode)		V_{TMPS25} [Note 5]			V

(**Notes** are listed on the next page.)

Notes 1. Excludes quantization error (±1/2 LSB).

2. This value is indicated as a ratio (%FSR) to the full-scale value.

3. When $AV_{REFP} < V_{DD}$, the MAX. values are as follows.
Overall error: Add ±1.0 LSB to the MAX. value when $AV_{REFP} = V_{DD}$.
Zero-scale error/Full-scale error: Add ±0.05%FSR to the MAX. value when $AV_{REFP} = V_{DD}$.
Integral linearity error/ Differential linearity error: Add ±0.5 LSB to the MAX. value when $AV_{REFP} = V_{DD}$.

4. Values when the conversion time is set to 57 μs (min.) and 95 μs (max.).

5. Refer to **2.6.2 Temperature sensor/internal reference voltage characteristics**.

(2) When reference voltage (+) = AV_{REFP}/ANI0 (ADREFP1 = 0, ADREFP0 = 1), reference voltage (–) = AV_{REFM}/ANI1 (ADREFM = 1), target pin : ANI16 to ANI26

(T_A = –40 to +85°C, 1.6 V ≤ EV_{DD0} = EV_{DD1} ≤ V_{DD} ≤ 5.5 V, 1.6 V ≤ AV_{REFP} ≤ V_{DD} ≤ 5.5 V, V_{SS} = EV_{SS0} = EV_{SS1} = 0 V, Reference voltage (+) = AV_{REFP}, Reference voltage (–) = AV_{REFM} = 0 V)

Parameter	Symbol	Conditions		MIN.	TYP.	MAX.	Unit
Resolution	RES			8		10	bit
Overall error[Note 1]	AINL	10-bit resolution EV_{DD0} = AV_{REFP} = V_{DD} [Notes 3, 4]	1.8 V ≤ AV_{REFP} ≤ 5.5 V		1.2	±5.0	LSB
			1.6 V ≤ AV_{REFP} ≤ 5.5 V [Note 5]		1.2	±8.5	LSB
Conversion time	t_{CONV}	10-bit resolution Target ANI pin : ANI16 to ANI26	3.6 V ≤ V_{DD} ≤ 5.5 V	2.125		39	μs
			2.7 V ≤ V_{DD} ≤ 5.5 V	3.1875		39	μs
			1.8 V ≤ V_{DD} ≤ 5.5 V	17		39	μs
			1.6 V ≤ V_{DD} ≤ 5.5 V	57		95	μs
Zero-scale error[Notes 1, 2]	E_{ZS}	10-bit resolution EV_{DD0} = AV_{REFP} = V_{DD} [Notes 3, 4]	1.8 V ≤ AV_{REFP} ≤ 5.5 V			±0.35	%FSR
			1.6 V ≤ AV_{REFP} ≤ 5.5 V [Note 5]			±0.60	%FSR
Full-scale error[Notes 1, 2]	E_{FS}	10-bit resolution EV_{DD0} = AV_{REFP} = V_{DD} [Notes 3, 4]	1.8 V ≤ AV_{REFP} ≤ 5.5 V			±0.35	%FSR
			1.6 V ≤ AV_{REFP} ≤ 5.5 V [Note 5]			±0.60	%FSR
Integral linearity error[Note 1]	ILE	10-bit resolution EV_{DD0} = AV_{REFP} = V_{DD} [Notes 3, 4]	1.8 V ≤ AV_{REFP} ≤ 5.5 V			±3.5	LSB
			1.6 V ≤ AV_{REFP} ≤ 5.5 V [Note 5]			±6.0	LSB
Differential linearity error[Note 1]	DLE	10-bit resolution EV_{DD0} = AV_{REFP} = V_{DD} [Notes 3, 4]	1.8 V ≤ AV_{REFP} ≤ 5.5 V			±2.0	LSB
			1.6 V ≤ AV_{REFP} ≤ 5.5 V [Note 5]			±2.5	LSB
Analog input voltage	V_{AIN}	ANI16 to ANI26		0		AV_{REFP} and EV_{DD0}	V

Notes 1. Excludes quantization error (±1/2 LSB).

2. This value is indicated as a ratio (%FSR) to the full-scale value.

3. When AV_{REFP} < V_{DD}, the MAX. values are as follows.
Overall error: Add ±1.0 LSB to the MAX. value when AV_{REFP} = V_{DD}.
Zero-scale error/Full-scale error: Add ±0.05%FSR to the MAX. value when AV_{REFP} = V_{DD}.
Integral linearity error/ Differential linearity error: Add ±0.5 LSB to the MAX. value when AV_{REFP} = V_{DD}.

4. When AV_{REFP} < EV_{DD0} ≤ V_{DD}, the MAX. values are as follows.
Overall error: Add ±4.0 LSB to the MAX. value when AV_{REFP} = V_{DD}.
Zero-scale error/Full-scale error: Add ±0.20%FSR to the MAX. value when AV_{REFP} = V_{DD}.
Integral linearity error/ Differential linearity error: Add ±2.0 LSB to the MAX. value when AV_{REFP} = V_{DD}.

5. When the conversion time is set to 57 μs (min.) and 95 μs (max.).

(3) When reference voltage (+) = V_{DD} (ADREFP1 = 0, ADREFP0 = 0), reference voltage (–) = V_{SS} (ADREFM = 0), target pin : ANI0 to ANI14, ANI16 to ANI26, internal reference voltage, and temperature sensor output voltage

(T_A = –40 to +85°C, 1.6 V ≤ EV_{DD0} = EV_{DD1} ≤ V_{DD} ≤ 5.5 V, V_{SS} = EV_{SS0} = EV_{SS1} = 0 V, Reference voltage (+) = V_{DD}, Reference voltage (–) = V_{SS})

Parameter	Symbol	Conditions		MIN.	TYP.	MAX.	Unit
Resolution	RES			8		10	bit
Overall error Note 1	AINL	10-bit resolution	1.8 V ≤ V_{DD} ≤ 5.5 V		1.2	±7.0	LSB
			1.6 V ≤ V_{DD} ≤ 5.5 V Note 3		1.2	±10.5	LSB
Conversion time	t_{CONV}	10-bit resolution Target pin: ANI0 to ANI14, ANI16 to ANI26	3.6 V ≤ V_{DD} ≤ 5.5 V	2.125		39	μs
			2.7 V ≤ V_{DD} ≤ 5.5 V	3.1875		39	μs
			1.8 V ≤ V_{DD} ≤ 5.5 V	17		39	μs
			1.6 V ≤ V_{DD} ≤ 5.5 V	57		95	μs
Conversion time	t_{CONV}	10-bit resolution Target pin: Internal reference voltage, and temperature sensor output voltage (HS (high-speed main) mode)	3.6 V ≤ V_{DD} ≤ 5.5 V	2.375		39	μs
			2.7 V ≤ V_{DD} ≤ 5.5 V	3.5625		39	μs
			2.4 V ≤ V_{DD} ≤ 5.5 V	17		39	μs
Zero-scale error Notes 1, 2	E_{ZS}	10-bit resolution	1.8 V ≤ V_{DD} ≤ 5.5 V			±0.60	%FSR
			1.6 V ≤ V_{DD} ≤ 5.5 V Note 3			±0.85	%FSR
Full-scale error Notes 1, 2	E_{FS}	10-bit resolution	1.8 V ≤ V_{DD} ≤ 5.5 V			±0.60	%FSR
			1.6 V ≤ V_{DD} ≤ 5.5 V Note 3			±0.85	%FSR
Integral linearity error Note 1	ILE	10-bit resolution	1.8 V ≤ V_{DD} ≤ 5.5 V			±4.0	LSB
			1.6 V ≤ V_{DD} ≤ 5.5 V Note 3			±6.5	LSB
Differential linearity error Note 1	DLE	10-bit resolution	1.8 V ≤ V_{DD} ≤ 5.5 V			±2.0	LSB
			1.6 V ≤ V_{DD} ≤ 5.5 V Note 3			±2.5	LSB
Analog input voltage	V_{AIN}	ANI0 to ANI14		0		V_{DD}	V
		ANI16 to ANI26		0		EV_{DD0}	V
		Internal reference voltage (2.4 V ≤ V_{DD} ≤ 5.5 V, HS (high-speed main) mode)		V_{BGR} Note 4			V
		Temperature sensor output voltage (2.4 V ≤ V_{DD} ≤ 5.5 V, HS (high-speed main) mode)		V_{TMPS25} Note 4			V

Notes 1. Excludes quantization error (±1/2 LSB).

2. This value is indicated as a ratio (%FSR) to the full-scale value.

3. When the conversion time is set to 57 μs (min.) and 95 μs (max.).

4. Refer to **2.6.2 Temperature sensor/internal reference voltage characteristics**.

(4) When reference voltage (+) = Internal reference voltage (ADREFP1 = 1, ADREFP0 = 0), reference voltage (–) = AV_{REFM}/ANI1 (ADREFM = 1), target pin : ANI0, ANI2 to ANI14, ANI16 to ANI26

(T_A = –40 to +85°C, 2.4 V ≤ V_{DD} ≤ 5.5 V, 1.6 V ≤ EV_{DD0} = EV_{DD1} ≤ V_{DD}, V_{SS} = EV_{SS0} = EV_{SS1} = 0 V, Reference voltage (+) = V_{BGR} Note 3, Reference voltage (–) = AV_{REFM} = 0 V Note 4, HS (high-speed main) mode)

Parameter	Symbol	Conditions		MIN.	TYP.	MAX.	Unit
Resolution	RES				8		bit
Conversion time	t_{CONV}	8-bit resolution	2.4 V ≤ V_{DD} ≤ 5.5 V	17		39	μs
Zero-scale error Notes 1, 2	E_{ZS}	8-bit resolution	2.4 V ≤ V_{DD} ≤ 5.5 V			±0.60	%FSR
Integral linearity error Note 1	ILE	8-bit resolution	2.4 V ≤ V_{DD} ≤ 5.5 V			±2.0	LSB
Differential linearity error Note 1	DLE	8-bit resolution	2.4 V ≤ V_{DD} ≤ 5.5 V			±1.0	LSB
Analog input voltage	V_{AIN}			0		V_{BGR} Note 3	V

Notes 1. Excludes quantization error (±1/2 LSB).

2. This value is indicated as a ratio (%FSR) to the full-scale value.

3. Refer to **2.6.2 Temperature sensor/internal reference voltage characteristics**.

4. When reference voltage (–) = V_{SS}, the MAX. values are as follows.
Zero-scale error: Add ±0.35%FSR to the MAX. value when reference voltage (–) = AV_{REFM}.
Integral linearity error: Add ±0.5 LSB to the MAX. value when reference voltage (–) = AV_{REFM}.
Differential linearity error: Add ±0.2 LSB to the MAX. value when reference voltage (–) = AV_{REFM}.

2.6.2 Temperature sensor/internal reference voltage characteristics

(T_A = –40 to +85°C, 2.4 V ≤ V_{DD} ≤ 5.5 V, V_{SS} = 0 V, HS (high-speed main) mode)

Parameter	Symbol	Conditions	MIN.	TYP.	MAX.	Unit
Temperature sensor output voltage	V_{TMPS25}	Setting ADS register = 80H, T_A = +25°C		1.05		V
Internal reference voltage	V_{BGR}	Setting ADS register = 81H	1.38	1.45	1.5	V
Temperature coefficient	F_{VTMPS}	Temperature sensor that depends on the temperature		–3.6		mV/°C
Operation stabilization wait time	t_{AMP}		5			μs

2.6.3 POR circuit characteristics

(T_A = –40 to +85°C, V_{SS} = 0 V)

Parameter	Symbol	Conditions	MIN.	TYP.	MAX.	Unit
Detection voltage	V_{POR}	Power supply rise time	1.47	1.51	1.55	V
	V_{PDR}	Power supply fall time	1.46	1.50	1.54	V
Minimum pulse width[Note]	T_{PW}		300			μs

Note Minimum time required for a POR reset when V_{DD} exceeds below V_{PDR}. This is also the minimum time required for a POR reset from when V_{DD} exceeds below 0.7 V to when V_{DD} exceeds V_{POR} while STOP mode is entered or the main system clock is stopped through setting bit 0 (HIOSTOP) and bit 7 (MSTOP) in the clock operation status control register (CSC).

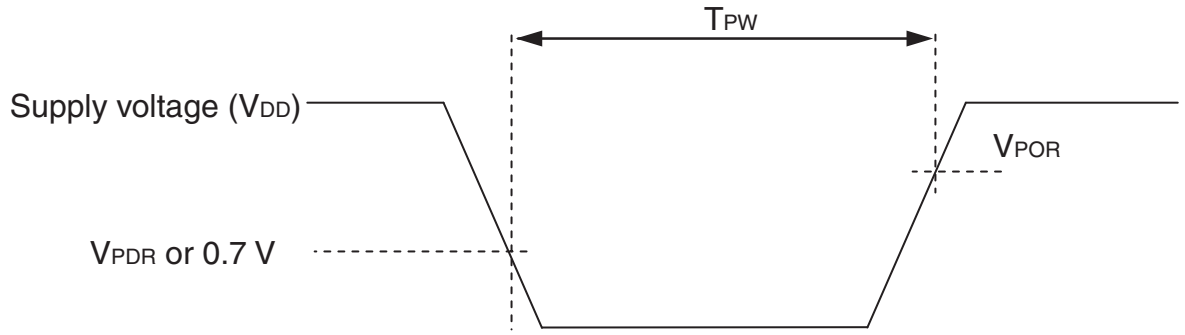

2.6.4 LVD circuit characteristics

LVD Detection Voltage of Reset Mode and Interrupt Mode

(T_A = –40 to +85°C, $V_{PDR} \le V_{DD} \le 5.5$ V, V_{SS} = 0 V)

Parameter		Symbol	Conditions	MIN.	TYP.	MAX.	Unit
Detection voltage	Supply voltage level	V_{LVD0}	Power supply rise time	3.98	4.06	4.14	V
			Power supply fall time	3.90	3.98	4.06	V
		V_{LVD1}	Power supply rise time	3.68	3.75	3.82	V
			Power supply fall time	3.60	3.67	3.74	V
		V_{LVD2}	Power supply rise time	3.07	3.13	3.19	V
			Power supply fall time	3.00	3.06	3.12	V
		V_{LVD3}	Power supply rise time	2.96	3.02	3.08	V
			Power supply fall time	2.90	2.96	3.02	V
		V_{LVD4}	Power supply rise time	2.86	2.92	2.97	V
			Power supply fall time	2.80	2.86	2.91	V
		V_{LVD5}	Power supply rise time	2.76	2.81	2.87	V
			Power supply fall time	2.70	2.75	2.81	V
		V_{LVD6}	Power supply rise time	2.66	2.71	2.76	V
			Power supply fall time	2.60	2.65	2.70	V
		V_{LVD7}	Power supply rise time	2.56	2.61	2.66	V
			Power supply fall time	2.50	2.55	2.60	V
		V_{LVD8}	Power supply rise time	2.45	2.50	2.55	V
			Power supply fall time	2.40	2.45	2.50	V
		V_{LVD9}	Power supply rise time	2.05	2.09	2.13	V
			Power supply fall time	2.00	2.04	2.08	V
		V_{LVD10}	Power supply rise time	1.94	1.98	2.02	V
			Power supply fall time	1.90	1.94	1.98	V
		V_{LVD11}	Power supply rise time	1.84	1.88	1.91	V
			Power supply fall time	1.80	1.84	1.87	V
		V_{LVD12}	Power supply rise time	1.74	1.77	1.81	V
			Power supply fall time	1.70	1.73	1.77	V
		V_{LVD13}	Power supply rise time	1.64	1.67	1.70	V
			Power supply fall time	1.60	1.63	1.66	V
Minimum pulse width		t_{LW}		300			μs
Detection delay time						300	μs

LVD Detection Voltage of Interrupt & Reset Mode

(T_A = –40 to +85°C, $V_{PDR} \leq V_{DD} \leq 5.5$ V, V_{SS} = 0 V)

Parameter	Symbol	Conditions			MIN.	TYP.	MAX.	Unit
Interrupt and reset mode	V_{LVDA0}	V_{POC2}, V_{POC1}, V_{POC0} = 0, 0, 0, falling reset voltage			1.60	1.63	1.66	V
	V_{LVDA1}	LVIS1, LVIS0 = 1, 0		Rising release reset voltage	1.74	1.77	1.81	V
				Falling interrupt voltage	1.70	1.73	1.77	V
	V_{LVDA2}	LVIS1, LVIS0 = 0, 1		Rising release reset voltage	1.84	1.88	1.91	V
				Falling interrupt voltage	1.80	1.84	1.87	V
	V_{LVDA3}	LVIS1, LVIS0 = 0, 0		Rising release reset voltage	2.86	2.92	2.97	V
				Falling interrupt voltage	2.80	2.86	2.91	V
	V_{LVDB0}	V_{POC2}, V_{POC1}, V_{POC0} = 0, 0, 1, falling reset voltage			1.80	1.84	1.87	V
	V_{LVDB1}	LVIS1, LVIS0 = 1, 0		Rising release reset voltage	1.94	1.98	2.02	V
				Falling interrupt voltage	1.90	1.94	1.98	V
	V_{LVDB2}	LVIS1, LVIS0 = 0, 1		Rising release reset voltage	2.05	2.09	2.13	V
				Falling interrupt voltage	2.00	2.04	2.08	V
	V_{LVDB3}	LVIS1, LVIS0 = 0, 0		Rising release reset voltage	3.07	3.13	3.19	V
				Falling interrupt voltage	3.00	3.06	3.12	V
	V_{LVDC0}	V_{POC2}, V_{POC1}, V_{POC0} = 0, 1, 0, falling reset voltage			2.40	2.45	2.50	V
	V_{LVDC1}	LVIS1, LVIS0 = 1, 0		Rising release reset voltage	2.56	2.61	2.66	V
				Falling interrupt voltage	2.50	2.55	2.60	V
	V_{LVDC2}	LVIS1, LVIS0 = 0, 1		Rising release reset voltage	2.66	2.71	2.76	V
				Falling interrupt voltage	2.60	2.65	2.70	V
	V_{LVDC3}	LVIS1, LVIS0 = 0, 0		Rising release reset voltage	3.68	3.75	3.82	V
				Falling interrupt voltage	3.60	3.67	3.74	V
	V_{LVDD0}	V_{POC2}, V_{POC1}, V_{POC0} = 0, 1, 1, falling reset voltage			2.70	2.75	2.81	V
	V_{LVDD1}	LVIS1, LVIS0 = 1, 0		Rising release reset voltage	2.86	2.92	2.97	V
				Falling interrupt voltage	2.80	2.86	2.91	V
	V_{LVDD2}	LVIS1, LVIS0 = 0, 1		Rising release reset voltage	2.96	3.02	3.08	V
				Falling interrupt voltage	2.90	2.96	3.02	V
	V_{LVDD3}	LVIS1, LVIS0 = 0, 0		Rising release reset voltage	3.98	4.06	4.14	V
				Falling interrupt voltage	3.90	3.98	4.06	V

2.6.5 Power supply voltage rising slope characteristics

(T_A = –40 to +85°C, V_{SS} = 0 V)

Parameter	Symbol	Conditions	MIN.	TYP.	MAX.	Unit
Power supply voltage rising slope	S_{VDD}				54	V/ms

Caution Make sure to keep the internal reset state by the LVD circuit or an external reset until V_{DD} reaches the operating voltage range shown in 2.4 AC Characteristics.

2.7 RAM Data Retention Characteristics

(T_A = –40 to +85°C, V_{SS} = 0 V)

Parameter	Symbol	Conditions	MIN.	TYP.	MAX.	Unit
Data retention supply voltage	V_{DDDR}		1.46[Note]		5.5	V

Note This depends on the POR detection voltage. For a falling voltage, data in RAM are retained until the voltage reaches the level that triggers a POR reset but not once it reaches the level at which a POR reset is generated.

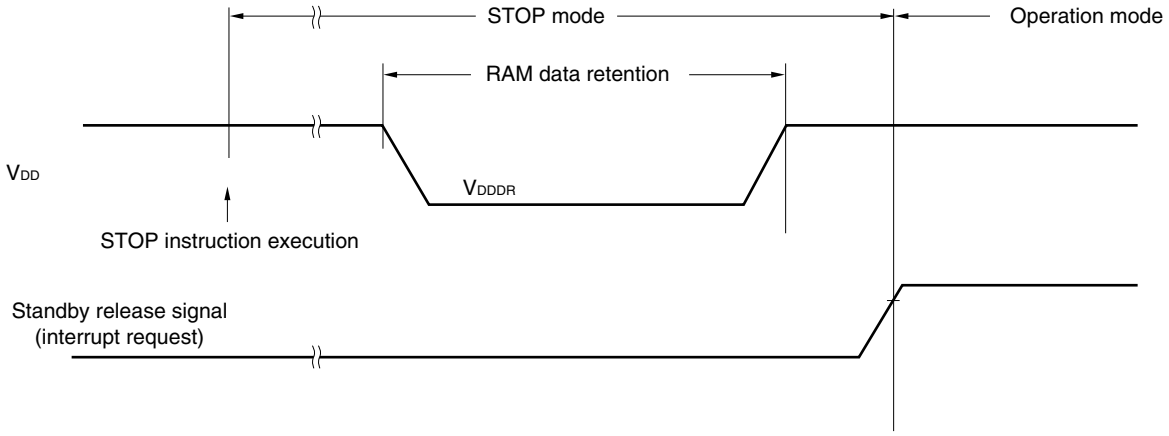

2.8 Flash Memory Programming Characteristics

(T_A = –40 to +85°C, 1.8 V ≤ V_{DD} ≤ 5.5 V, V_{SS} = 0 V)

Parameter	Symbol	Conditions	MIN.	TYP.	MAX.	Unit
CPU/peripheral hardware clock frequency	f_{CLK}	1.8 V ≤ V_{DD} ≤ 5.5 V	1		32	MHz
Number of code flash rewrites Notes 1, 2, 3	C_{erwr}	Retained for 20 years T_A = 85°C	1,000			Times
Number of data flash rewrites Notes 1, 2, 3		Retained for 1 years T_A = 25°C		1,000,000		
		Retained for 5 years T_A = 85°C	100,000			
		Retained for 20 years T_A = 85°C	10,000			

Notes 1. 1 erase + 1 write after the erase is regarded as 1 rewrite.
The retaining years are until next rewrite after the rewrite.

2. When using flash memory programmer and Renesas Electronics self programming library

3. These are the characteristics of the flash memory and the results obtained from reliability testing by Renesas Electronics Corporation.

2.9 Dedicated Flash Memory Programmer Communication (UART)

(T_A = –40 to +85°C, 1.8 V ≤ EV_{DD0} = EV_{DD1} ≤ V_{DD} ≤ 5.5 V, V_{SS} = EV_{SS0} = EV_{SS1} = 0 V)

Parameter	Symbol	Conditions	MIN.	TYP.	MAX.	Unit
Transfer rate		During serial programming	115,200		1,000,000	bps

2.10 Timing of Entry to Flash Memory Programming Modes

(T_A = –40 to +85°C, 1.8 V ≤ EV_{DD0} = EV_{DD1} ≤ V_{DD} ≤ 5.5 V, V_{SS} = EV_{SS0} = EV_{SS1} = 0 V)

Parameter	Symbol	Conditions	MIN.	TYP.	MAX.	Unit
Time to complete the communication for the initial setting after the external reset is released	t_{SUINIT}	POR and LVD reset must be released before the external reset is released.			100	ms
Time to release the external reset after the TOOL0 pin is set to the low level	t_{SU}	POR and LVD reset must be released before the external reset is released.	10			μs
Time to hold the TOOL0 pin at the low level after the external reset is released (excluding the processing time of the firmware to control the flash memory)	t_{HD}	POR and LVD reset must be released before the external reset is released.	1			ms

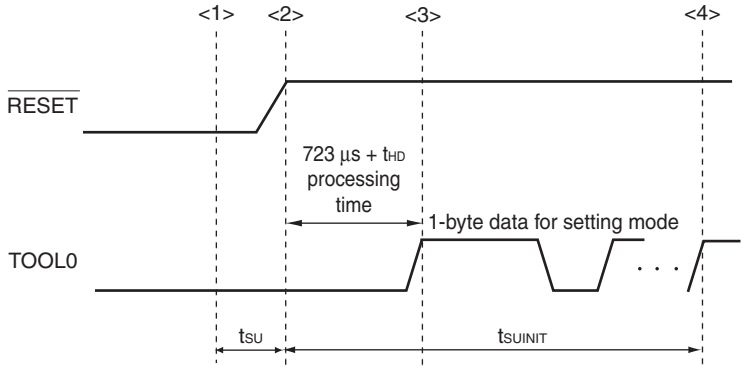

<1> The low level is input to the TOOL0 pin.

<2> The external reset is released (POR and LVD reset must be released before the external reset is released.).

<3> The TOOL0 pin is set to the high level.

<4> Setting of the flash memory programming mode by UART reception and complete the baud rate setting.

Remark t_{SUINIT}: Communication for the initial setting must be completed within 100 ms after the external reset is released during this period.

t_{SU}: Time to release the external reset after the TOOL0 pin is set to the low level

t_{HD}: Time to hold the TOOL0 pin at the low level after the external reset is released (excluding the processing time of the firmware to control the flash memory)

3. ELECTRICAL SPECIFICATIONS (G: INDUSTRIAL APPLICATIONS T_A = -40 to +105°C)

This chapter describes the following electrical specifications.

Target products G: Industrial applications T_A = –40 to +105°C
R5F100xxGxx

Cautions 1. The RL78 microcontrollers have an on-chip debug function, which is provided for development and evaluation. Do not use the on-chip debug function in products designated for mass production, because the guaranteed number of rewritable times of the flash memory may be exceeded when this function is used, and product reliability therefore cannot be guaranteed. Renesas Electronics is not liable for problems occurring when the on-chip debug function is used.

2. With products not provided with an EV_{DD0}, EV_{DD1}, EV_{SS0}, or EV_{SS1} pin, replace EV_{DD0} and EV_{DD1} with V_{DD}, or replace EV_{SS0} and EV_{SS1} with V_{SS}.

3. The pins mounted depend on the product. Refer to 2.1 Port Function to 2.2.1 Functions for each product.

4. Please contact Renesas Electronics sales office for derating of operation under T_A = +85°C to +105°C. Derating is the systematic reduction of load for the sake of improved reliability.

Remark When RL78/G13 is used in the range of T_A = –40 to +85°C, see **CHAPTER 2 ELECTRICAL SPECIFICATIONS (T_A = –40 to +85°C)**.

There are following differences between the products "G: Industrial applications (T_A = –40 to +105°C)" and the products “A: Consumer applications, and D: Industrial applications”.

Parameter	Application	
	A: Consumer applications, D: Industrial applications	G: Industrial applications
Operating ambient temperature	T_A = -40 to +85°C	T_A = -40 to +105°C
Operating mode Operating voltage range	HS (high-speed main) mode: 2.7 V ≤ V_{DD} ≤ 5.5 V@1 MHz to 32 MHz 2.4 V ≤ V_{DD} ≤ 5.5 V@1 MHz to 16 MHz LS (low-speed main) mode: 1.8 V ≤ V_{DD} ≤ 5.5 V@1 MHz to 8 MHz LV (low-voltage main) mode: 1.6 V ≤ V_{DD} ≤ 5.5 V@1 MHz to 4 MHz	HS (high-speed main) mode only: 2.7 V ≤ V_{DD} ≤ 5.5 V@1 MHz to 32 MHz 2.4 V ≤ V_{DD} ≤ 5.5 V@1 MHz to 16 MHz
High-speed on-chip oscillator clock accuracy	1.8 V ≤ V_{DD} ≤ 5.5 V ±1.0%@ T_A = -20 to +85°C ±1.5%@ T_A = -40 to -20°C 1.6 V ≤ V_{DD} < 1.8 V ±5.0%@ T_A = -20 to +85°C ±5.5%@ T_A = -40 to -20°C	2.4 V ≤ V_{DD} ≤ 5.5 V ±2.0%@ T_A = +85 to +105°C ±1.0%@ T_A = -20 to +85°C ±1.5%@ T_A = -40 to -20°C
Serial array unit	UART CSI: f_{CLK}/2 (supporting 16 Mbps), f_{CLK}/4 Simplified I^2C communication	UART CSI: f_{CLK}/4 Simplified I^2C communication
IICA	Normal mode Fast mode Fast mode plus	Normal mode Fast mode
Voltage detector	Rise detection voltage: 1.67 V to 4.06 V (14 levels) Fall detection voltage: 1.63 V to 3.98 V (14 levels)	Rise detection voltage: 2.61 V to 4.06 V (8 levels) Fall detection voltage: 2.55 V to 3.98 V (8 levels)

(**Remark** is listed on the next page.)

Remark The electrical characteristics of the products G: Industrial applications (T_A = -40 to +105°C) are different from those of the products "A: Consumer applications, and D: Industrial applications". For details, refer to **3.1** to **3.10**.

3.1 Absolute Maximum Ratings

Absolute Maximum Ratings (T_A = 25°C) (1/2)

Parameter	Symbols	Conditions	Ratings	Unit
Supply voltage	V_{DD}		−0.5 to +6.5	V
	EV_{DD0}, EV_{DD1}	EV_{DD0} = EV_{DD1}	−0.5 to +6.5	V
	EV_{SS0}, EV_{SS1}	EV_{SS0} = EV_{SS1}	−0.5 to +0.3	V
REGC pin input voltage	V_{IREGC}	REGC	−0.3 to +2.8 and −0.3 to V_{DD} +0.3 Note 1	V
Input voltage	V_{I1}	P00 to P07, P10 to P17, P30 to P37, P40 to P47, P50 to P57, P64 to P67, P70 to P77, P80 to P87, P90 to P97, P100 to P106, P110 to P117, P120, P125 to P127, P140 to P147	−0.3 to EV_{DD0} +0.3 and −0.3 to V_{DD} +0.3 Note 2	V
	V_{I2}	P60 to P63 (N-ch open-drain)	−0.3 to +6.5	V
	V_{I3}	P20 to P27, P121 to P124, P137, P150 to P156, EXCLK, EXCLKS, $\overline{\text{RESET}}$	−0.3 to V_{DD} +0.3 Note 2	V
Output voltage	V_{O1}	P00 to P07, P10 to P17, P30 to P37, P40 to P47, P50 to P57, P60 to P67, P70 to P77, P80 to P87, P90 to P97, P100 to P106, P110 to P117, P120, P125 to P127, P130, P140 to P147	−0.3 to EV_{DD0} +0.3 and −0.3 to V_{DD} +0.3 Note 2	V
	V_{O2}	P20 to P27, P150 to P156	−0.3 to V_{DD} +0.3 Note 2	V
Analog input voltage	V_{AI1}	ANI16 to ANI26	−0.3 to EV_{DD0} +0.3 and −0.3 to AV_{REF}(+) +0.3 Notes 2, 3	V
	V_{AI2}	ANI0 to ANI14	−0.3 to V_{DD} +0.3 and −0.3 to AV_{REF}(+) +0.3 Notes 2, 3	V

Notes 1. Connect the REGC pin to Vss via a capacitor (0.47 to 1 μF). This value regulates the absolute maximum rating of the REGC pin. Do not use this pin with voltage applied to it.

2. Must be 6.5 V or lower.

3. Do not exceed AV_{REF}(+) + 0.3 V in case of A/D conversion target pin.

Caution Product quality may suffer if the absolute maximum rating is exceeded even momentarily for any parameter. That is, the absolute maximum ratings are rated values at which the product is on the verge of suffering physical damage, and therefore the product must be used under conditions that ensure that the absolute maximum ratings are not exceeded.

Remarks 1. Unless specified otherwise, the characteristics of alternate-function pins are the same as those of the port pins.

2. AV_{REF}(+) : + side reference voltage of the A/D converter.

3. V_{SS} : Reference voltage

Absolute Maximum Ratings (T_A = 25°C) (2/2)

Parameter	Symbols	Conditions		Ratings	Unit
Output current, high	I_{OH1}	Per pin	P00 to P07, P10 to P17, P30 to P37, P40 to P47, P50 to P57, P64 to P67, P70 to P77, P80 to P87, P90 to P97, P100 to P106, P110 to P117, P120, P125 to P127, P130, P140 to P147	−40	mA
		Total of all pins −170 mA	P00 to P04, P07, P32 to P37, P40 to P47, P102 to P106, P120, P125 to P127, P130, P140 to P145	−70	mA
			P05, P06, P10 to P17, P30, P31, P50 to P57, P64 to P67, P70 to P77, P80 to P87, P90 to P97, P100, P101, P110 to P117, P146, P147	−100	mA
	I_{OH2}	Per pin	P20 to P27, P150 to P156	−0.5	mA
		Total of all pins		−2	mA
Output current, low	I_{OL1}	Per pin	P00 to P07, P10 to P17, P30 to P37, P40 to P47, P50 to P57, P60 to P67, P70 to P77, P80 to P87, P90 to P97, P100 to P106, P110 to P117, P120, P125 to P127, P130, P140 to P147	40	mA
		Total of all pins 170 mA	P00 to P04, P07, P32 to P37, P40 to P47, P102 to P106, P120, P125 to P127, P130, P140 to P145	70	mA
			P05, P06, P10 to P17, P30, P31, P50 to P57, P60 to P67, P70 to P77, P80 to P87, P90 to P97, P100, P101, P110 to P117, P146, P147	100	mA
	I_{OL2}	Per pin	P20 to P27, P150 to P156	1	mA
		Total of all pins		5	mA
Operating ambient temperature	T_A	In normal operation mode		−40 to +105	°C
		In flash memory programming mode			
Storage temperature	T_{stg}			−65 to +150	°C

Caution Product quality may suffer if the absolute maximum rating is exceeded even momentarily for any parameter. That is, the absolute maximum ratings are rated values at which the product is on the verge of suffering physical damage, and therefore the product must be used under conditions that ensure that the absolute maximum ratings are not exceeded.

Remark Unless specified otherwise, the characteristics of alternate-function pins are the same as those of the port pins.

3.2 Oscillator Characteristics

3.2.1 X1, XT1 oscillator characteristics

(T_A = −40 to +105°C, 2.4 V ≤ V_{DD} ≤ 5.5 V, V_{SS} = 0 V)

Parameter	Resonator	Conditions	MIN.	TYP.	MAX.	Unit
X1 clock oscillation frequency (f_X)Note	Ceramic resonator/ crystal resonator	2.7 V ≤ V_{DD} ≤ 5.5 V	1.0		20.0	MHz
		2.4 V ≤ V_{DD} < 2.7 V	1.0		16.0	MHz
XT1 clock oscillation frequency (f_X)Note	Crystal resonator		32	32.768	35	kHz

Note Indicates only permissible oscillator frequency ranges. Refer to AC Characteristics for instruction execution time. Request evaluation by the manufacturer of the oscillator circuit mounted on a board to check the oscillator characteristics.

Caution Since the CPU is started by the high-speed on-chip oscillator clock after a reset release, check the X1 clock oscillation stabilization time using the oscillation stabilization time counter status register (OSTC) by the user. Determine the oscillation stabilization time of the OSTC register and the oscillation stabilization time select register (OSTS) after sufficiently evaluating the oscillation stabilization time with the resonator to be used.

Remark When using the X1 oscillator and XT1 oscillator, refer to **5.4 System Clock Oscillator**.

3.2.2 On-chip oscillator characteristics

(T_A = −40 to +105°C, 2.4 V ≤ V_{DD} ≤ 5.5 V, V_{SS} = 0 V)

Oscillators	Parameters	Conditions		MIN.	TYP.	MAX.	Unit
High-speed on-chip oscillator clock frequency Notes 1, 2	f_{IH}			1		32	MHz
High-speed on-chip oscillator clock frequency accuracy		−20 to +85 °C	2.4 V ≤ V_{DD} ≤ 5.5 V	−1.0		+1.0	%
		−40 to −20 °C	2.4 V ≤ V_{DD} ≤ 5.5 V	−1.5		+1.5	%
		+85 to +105 °C	2.4 V ≤ V_{DD} ≤ 5.5 V	−2.0		+2.0	%
Low-speed on-chip oscillator clock frequency	f_{IL}				15		kHz
Low-speed on-chip oscillator clock frequency accuracy				−15		+15	%

Notes 1. High-speed on-chip oscillator frequency is selected by bits 0 to 3 of option byte (000C2H/010C2H) and bits 0 to 2 of HOCODIV register.

2. This indicates the oscillator characteristics only. Refer to AC Characteristics for instruction execution time.

3.3 DC Characteristics

3.3.1 Pin characteristics

(T_A = −40 to +105°C, 2.4 V ≤ EV_{DD0} = EV_{DD1} ≤ V_{DD} ≤ 5.5 V, V_{SS} = EV_{SS0} = EV_{SS1} = 0 V) (1/5)

Items	Symbol	Conditions		MIN.	TYP.	MAX.	Unit
Output current, high[Note 1]	I_{OH1}	Per pin for P00 to P07, P10 to P17, P30 to P37, P40 to P47, P50 to P57, P64 to P67, P70 to P77, P80 to P87, P90 to P97, P100 to P106, P110 to P117, P120, P125 to P127, P130, P140 to P147	2.4 V ≤ EV_{DD0} ≤ 5.5 V			-3.0 [Note 2]	mA
		Total of P00 to P04, P07, P32 to P37, P40 to P47, P102 to P106, P120, P125 to P127, P130, P140 to P145 (When duty ≤ 70% [Note 3])	4.0 V ≤ EV_{DD0} ≤ 5.5 V			-30.0	mA
			2.7 V ≤ EV_{DD0} < 4.0 V			−10.0	mA
			2.4 V ≤ EV_{DD0} < 2.7 V			−5.0	mA
		Total of P05, P06, P10 to P17, P30, P31, P50 to P57, P64 to P67, P70 to P77, P80 to P87, P90 to P97, P100, P101, P110 to P117, P146, P147 (When duty ≤ 70% [Note 3])	4.0 V ≤ EV_{DD0} ≤ 5.5 V			-30.0	mA
			2.7 V ≤ EV_{DD0} < 4.0 V			−19.0	mA
			2.4 V ≤ EV_{DD0} < 2.7 V			−10.0	mA
		Total of all pins (When duty ≤ 70% [Note 3])	2.4 V ≤ EV_{DD0} ≤ 5.5 V			-60.0	mA
	I_{OH2}	Per pin for P20 to P27, P150 to P156	2,4 V ≤ V_{DD} ≤ 5.5 V			−0.1 [Note 2]	mA
		Total of all pins (When duty ≤ 70% [Note 3])	2.4 V ≤ V_{DD} ≤ 5.5 V			−1.5	mA

Notes 1. Value of current at which the device operation is guaranteed even if the current flows from the EV_{DD0}, EV_{DD1}, V_{DD} pins to an output pin.

2. Do not exceed the total current value.

3. Specification under conditions where the duty factor ≤ 70%.
The output current value that has changed to the duty factor > 70% the duty ratio can be calculated with the following expression (when changing the duty factor from 70% to n%).

- Total output current of pins = (I_{OH} × 0.7)/(n × 0.01)

<Example> Where n = 80% and I_{OH} = −10.0 mA

Total output current of pins = (−10.0 × 0.7)/(80 × 0.01) ≅ −8.7 mA

However, the current that is allowed to flow into one pin does not vary depending on the duty factor. A current higher than the absolute maximum rating must not flow into one pin.

Caution P00, P02 to P04, P10 to P15, P17, P43 to P45, P50, P52 to P55, P71, P74, P80 to P82, P96, and P142 to P144 do not output high level in N-ch open-drain mode.

Remark Unless specified otherwise, the characteristics of alternate-function pins are the same as those of the port pins.

(T_A = −40 to +105°C, 2.4 V ≤ EV_{DD0} = EV_{DD1} ≤ V_{DD} ≤ 5.5 V, V_{SS} = EV_{SS0} = EV_{SS1} = 0 V) (2/5)

Items	Symbol	Conditions		MIN.	TYP.	MAX.	Unit
Output current, low Note 1	I_{OL1}	Per pin for P00 to P07, P10 to P17, P30 to P37, P40 to P47, P50 to P57, P64 to P67, P70 to P77, P80 to P87, P90 to P97, P100 to P106, P110 to P117, P120, P125 to P127, P130, P140 to P147				8.5 Note 2	mA
		Per pin for P60 to P63				15.0 Note 2	mA
		Total of P00 to P04, P07, P32 to P37, P40 to P47, P102 to P106, P120, P125 to P127, P130, P140 to P145 (When duty ≤ 70% Note 3)	4.0 V ≤ EV_{DD0} ≤ 5.5 V			40.0	mA
			2.7 V ≤ EV_{DD0} < 4.0 V			15.0	mA
			2.4 V ≤ EV_{DD0} < 2.7 V			9.0	mA
		Total of P05, P06, P10 to P17, P30, P31, P50 to P57, P60 to P67, P70 to P77, P80 to P87, P90 to P97, P100, P101, P110 to P117, P146, P147 (When duty ≤ 70% Note 3)	4.0 V ≤ EV_{DD0} ≤ 5.5 V			40.0	mA
			2.7 V ≤ EV_{DD0} < 4.0 V			35.0	mA
			2,4 V ≤ EV_{DD0} < 2.7 V			20.0	mA
		Total of all pins (When duty ≤ 70% Note 3)				80.0	mA
	I_{OL2}	Per pin for P20 to P27, P150 to P156				0.4 Note 2	mA
		Total of all pins (When duty ≤ 70% Note 3)	2,4 V ≤ V_{DD} ≤ 5.5 V			5.0	mA

Notes 1. Value of current at which the device operation is guaranteed even if the current flows from an output pin to the EV_{SS0}, EV_{SS1} and V_{SS} pin.

2. Do not exceed the total current value.

3. Specification under conditions where the duty factor ≤ 70%.
The output current value that has changed to the duty factor > 70% the duty ratio can be calculated with the following expression (when changing the duty factor from 70% to n%).

- Total output current of pins = (I_{OL} × 0.7)/(n × 0.01)

<Example> Where n = 80% and I_{OL} = 10.0 mA

Total output current of pins = (10.0 × 0.7)/(80 × 0.01) ≅ 8.7 mA

However, the current that is allowed to flow into one pin does not vary depending on the duty factor. A current higher than the absolute maximum rating must not flow into one pin.

Remark Unless specified otherwise, the characteristics of alternate-function pins are the same as those of the port pins.

(T_A = −40 to +105°C, 2.4 V ≤ EV_{DD0} = EV_{DD1} ≤ V_{DD} ≤ 5.5 V, V_{SS} = EV_{SS0} = EV_{SS1} = 0 V) (3/5)

Items	Symbol	Conditions		MIN.	TYP.	MAX.	Unit
Input voltage, high	V_{IH1}	P00 to P07, P10 to P17, P30 to P37, P40 to P47, P50 to P57, P64 to P67, P70 to P77, P80 to P87, P90 to P97, P100 to P106, P110 to P117, P120, P125 to P127, P140 to P147	Normal input buffer	0.8EV_{DD0}		EV_{DD0}	V
	V_{IH2}	P01, P03, P04, P10, P11, P13 to P17, P43, P44, P53 to P55, P80, P81, P142, P143	TTL input buffer 4.0 V ≤ EV_{DD0} ≤ 5.5 V	2.2		EV_{DD0}	V
			TTL input buffer 3.3 V ≤ EV_{DD0} < 4.0 V	2.0		EV_{DD0}	V
			TTL input buffer 2.4 V ≤ EV_{DD0} < 3.3 V	1.5		EV_{DD0}	V
	V_{IH3}	P20 to P27, P150 to P156		0.7V_{DD}		V_{DD}	V
	V_{IH4}	P60 to P63		0.7EV_{DD0}		6.0	V
	V_{IH5}	P121 to P124, P137, EXCLK, EXCLKS, $\overline{\text{RESET}}$		0.8V_{DD}		V_{DD}	V
Input voltage, low	V_{IL1}	P00 to P07, P10 to P17, P30 to P37, P40 to P47, P50 to P57, P64 to P67, P70 to P77, P80 to P87, P90 to P97, P100 to P106, P110 to P117, P120, P125 to P127, P140 to P147	Normal input buffer	0		0.2EV_{DD0}	V
	V_{IL2}	P01, P03, P04, P10, P11, P13 to P17, P43, P44, P53 to P55, P80, P81, P142, P143	TTL input buffer 4.0 V ≤ EV_{DD0} ≤ 5.5 V	0		0.8	V
			TTL input buffer 3.3 V ≤ EV_{DD0} < 4.0 V	0		0.5	V
			TTL input buffer 2.4 V ≤ EV_{DD0} < 3.3 V	0		0.32	V
	V_{IL3}	P20 to P27, P150 to P156		0		0.3V_{DD}	V
	V_{IL4}	P60 to P63		0		0.3EV_{DD0}	V
	V_{IL5}	P121 to P124, P137, EXCLK, EXCLKS, $\overline{\text{RESET}}$		0		0.2V_{DD}	V

Caution The maximum value of V_{IH} of pins P00, P02 to P04, P10 to P15, P17, P43 to P45, P50, P52 to P55, P71, P74, P80 to P82, P96, and P142 to P144 is EV_{DD0}, even in the N-ch open-drain mode.

Remark Unless specified otherwise, the characteristics of alternate-function pins are the same as those of the port pins.

(T_A = −40 to +105°C, 2.4 V ≤ EV_{DD0} = EV_{DD1} ≤ V_{DD} ≤ 5.5 V, V_{SS} = EV_{SS0} = EV_{SS1} = 0 V) (4/5)

Items	Symbol	Conditions		MIN.	TYP.	MAX.	Unit
Output voltage, high	V_{OH1}	P00 to P07, P10 to P17, P30 to P37, P40 to P47, P50 to P57, P64 to P67, P70 to P77, P80 to P87, P90 to P97, P100 to P106, P110 to P117, P120, P125 to P127, P130, P140 to P147	4.0 V ≤ EV_{DD0} ≤ 5.5 V, I_{OH1} = −3.0 mA	EV_{DD0} − 0.7			V
			2.7 V ≤ EV_{DD0} ≤ 5.5 V, I_{OH1} = −2.0 mA	EV_{DD0} − 0.6			V
			2.4 V ≤ EV_{DD0} ≤ 5.5 V, I_{OH1} = −1.5 mA	EV_{DD0} − 0.5			V
	V_{OH2}	P20 to P27, P150 to P156	2.4 V ≤ V_{DD} ≤ 5.5 V, I_{OH2} = −100 μA	V_{DD} − 0.5			V
Output voltage, low	V_{OL1}	P00 to P07, P10 to P17, P30 to P37, P40 to P47, P50 to P57, P64 to P67, P70 to P77, P80 to P87, P90 to P97, P100 to P106, P110 to P117, P120, P125 to P127, P130, P140 to P147	4.0 V ≤ EV_{DD0} ≤ 5.5 V, I_{OL1} = 8.5 mA			0.7	V
			4.0 V ≤ EV_{DD0} ≤ 5.5 V, I_{OL1} = 3.0 mA			0.6	V
			2.7 V ≤ EV_{DD0} ≤ 5.5 V, I_{OL1} = 1.5 mA			0.4	V
			2.4 V ≤ EV_{DD0} ≤ 5.5 V, I_{OL1} = 0.6 mA			0.4	V
	V_{OL2}	P20 to P27, P150 to P156	2.4 V ≤ V_{DD} ≤ 5.5 V, I_{OL2} = 400 μA			0.4	V
	V_{OL3}	P60 to P63	4.0 V ≤ EV_{DD0} ≤ 5.5 V, I_{OL3} = 15.0 mA			2.0	V
			4.0 V ≤ EV_{DD0} ≤ 5.5 V, I_{OL3} = 5.0 mA			0.4	V
			2.7 V ≤ EV_{DD0} ≤ 5.5 V, I_{OL3} = 3.0 mA			0.4	V
			2.4 V ≤ EV_{DD0} ≤ 5.5 V, I_{OL3} = 2.0 mA			0.4	V

Caution P00, P02 to P04, P10 to P15, P17, P43 to P45, P50, P52 to P55, P71, P74, P80 to P82, P96, and P142 to P144 do not output high level in N-ch open-drain mode.

Remark Unless specified otherwise, the characteristics of alternate-function pins are the same as those of the port pins.

(T_A = −40 to +105°C, 2.4 V ≤ EV_{DD0} = EV_{DD1} ≤ V_{DD} ≤ 5.5 V, V_{SS} = EV_{SS0} = EV_{SS1} = 0 V) (5/5)

Items	Symbol	Conditions			MIN.	TYP.	MAX.	Unit
Input leakage current, high	I_{LIH1}	P00 to P07, P10 to P17, P30 to P37, P40 to P47, P50 to P57, P60 to P67, P70 to P77, P80 to P87, P90 to P97, P100 to P106, P110 to P117, P120, P125 to P127, P140 to P147	V_I = EV_{DD0}				1	μA
	I_{LIH2}	P20 to P27, P137, P150 to P156, $\overline{RESET}$	V_I = V_{DD}				1	μA
	I_{LIH3}	P121 to P124 (X1, X2, XT1, XT2, EXCLK, EXCLKS)	V_I = V_{DD}	In input port or external clock input			1	μA
				In resonator connection			10	μA
Input leakage current, low	I_{LIL1}	P00 to P07, P10 to P17, P30 to P37, P40 to P47, P50 to P57, P60 to P67, P70 to P77, P80 to P87, P90 to P97, P100 to P106, P110 to P117, P120, P125 to P127, P140 to P147	V_I = EV_{SS0}				−1	μA
	I_{LIL2}	P20 to P27, P137, P150 to P156, $\overline{RESET}$	V_I = V_{SS}				−1	μA
	I_{LIL3}	P121 to P124 (X1, X2, XT1, XT2, EXCLK, EXCLKS)	V_I = V_{SS}	In input port or external clock input			−1	μA
				In resonator connection			−10	μA
On-chip pll-up resistance	R_U	P00 to P07, P10 to P17, P30 to P37, P40 to P47, P50 to P57, P64 to P67, P70 to P77, P80 to P87, P90 to P97, P100 to P106, P110 to P117, P120, P125 to P127, P140 to P147	V_I = EV_{SS0}, In input port		10	20	100	kΩ

Remark Unless specified otherwise, the characteristics of alternate-function pins are the same as those of the port pins.

3.3.2 Supply current characteristics

(1) Flash ROM: 16 to 64 KB of 20- to 64-pin products

(T_A = –40 to +105°C, 2.4 V ≤ EV_{DD0} ≤ V_{DD} ≤ 5.5 V, V_{SS} = EV_{SS0} = 0 V) (1/2)

Parameter	Symbol	Conditions					MIN.	TYP.	MAX.	Unit
Supply current Note 1	I_{DD1}	Operating mode	HS (high-speed main) mode Note 5	f_{IH} = 32 MHz Note 3	Basic operation	V_{DD} = 5.0 V		2.1		mA
						V_{DD} = 3.0 V		2.1		mA
					Normal operation	V_{DD} = 5.0 V		4.6	7.5	mA
						V_{DD} = 3.0 V		4.6	7.5	mA
				f_{IH} = 24 MHz Note 3	Normal operation	V_{DD} = 5.0 V		3.7	5.8	mA
						V_{DD} = 3.0 V		3.7	5.8	mA
				f_{IH} = 16 MHz Note 3	Normal operation	V_{DD} = 5.0 V		2.7	4.2	mA
						V_{DD} = 3.0 V		2.7	4.2	mA
			HS (high-speed main) mode Note 5	f_{MX} = 20 MHz Note 2, V_{DD} = 5.0 V	Normal operation	Square wave input		3.0	4.9	mA
						Resonator connection		3.2	5.0	mA
				f_{MX} = 20 MHz Note 2, V_{DD} = 3.0 V	Normal operation	Square wave input		3.0	4.9	mA
						Resonator connection		3.2	5.0	mA
				f_{MX} = 10 MHz Note 2, V_{DD} = 5.0 V	Normal operation	Square wave input		1.9	2.9	mA
						Resonator connection		1.9	2.9	mA
				f_{MX} = 10 MHz Note 2, V_{DD} = 3.0 V	Normal operation	Square wave input		1.9	2.9	mA
						Resonator connection		1.9	2.9	mA
			Subsystem clock operation	f_{SUB} = 32.768 kHz Note 4 T_A = –40°C	Normal operation	Square wave input		4.1	4.9	μA
						Resonator connection		4.2	5.0	μA
				f_{SUB} = 32.768 kHz Note 4 T_A = +25°C	Normal operation	Square wave input		4.1	4.9	μA
						Resonator connection		4.2	5.0	μA
				f_{SUB} = 32.768 kHz Note 4 T_A = +50°C	Normal operation	Square wave input		4.2	5.5	μA
						Resonator connection		4.3	5.6	μA
				f_{SUB} = 32.768 kHz Note 4 T_A = +70°C	Normal operation	Square wave input		4.3	6.3	μA
						Resonator connection		4.4	6.4	μA
				f_{SUB} = 32.768 kHz Note 4 T_A = +85°C	Normal operation	Square wave input		4.6	7.7	μA
						Resonator connection		4.7	7.8	μA
				f_{SUB} = 32.768 kHz Note 4 T_A = +105°C	Normal operation	Square wave input		6.9	19.7	μA
						Resonator connection		7.0	19.8	μA

(**Notes** and **Remarks** are listed on the next page.)

Notes 1. Total current flowing into V_{DD} and EV_{DD0}, including the input leakage current flowing when the level of the input pin is fixed to V_{DD}, EV_{DD0} or V_{SS}, EV_{SS0}. The values below the MAX. column include the peripheral operation current. However, not including the current flowing into the A/D converter, LVD circuit, I/O port, and on-chip pull-up/pull-down resistors and the current flowing during data flash rewrite.

2. When high-speed on-chip oscillator and subsystem clock are stopped.

3. When high-speed system clock and subsystem clock are stopped.

4. When high-speed on-chip oscillator and high-speed system clock are stopped. When AMPHS1 = 1 (Ultra-low power consumption oscillation). However, not including the current flowing into the RTC, 12-bit interval timer, and watchdog timer.

5. Relationship between operation voltage width, operation frequency of CPU and operation mode is as below.

HS (high-speed main) mode: 2.7 V ≤ V_{DD} ≤ 5.5 V@1 MHz to 32 MHz
2.4 V ≤ V_{DD} ≤ 5.5 V@1 MHz to 16 MHz

Remarks 1. f_{MX}: High-speed system clock frequency (X1 clock oscillation frequency or external main system clock frequency)

2. f_{IH}: High-speed on-chip oscillator clock frequency

3. f_{SUB}: Subsystem clock frequency (XT1 clock oscillation frequency)

4. Except subsystem clock operation, temperature condition of the TYP. value is T_A = 25°C

(1) Flash ROM: 16 to 64 KB of 20- to 64-pin products

(T_A = –40 to +105°C, 2.4 V ≤ EV_{DD0} ≤ V_{DD} ≤ 5.5 V, V_{SS} = EV_{SS0} = 0 V) (2/2)

Parameter	Symbol	Conditions				MIN.	TYP.	MAX.	Unit
Supply current Note 1	I_{DD2} Note 2	HALT mode	HS (high-speed main) mode Note 7	f_{IH} = 32 MHz Note 4	V_{DD} = 5.0 V		0.54	2.90	mA
					V_{DD} = 3.0 V		0.54	2.90	mA
				f_{IH} = 24 MHz Note 4	V_{DD} = 5.0 V		0.44	2.30	mA
					V_{DD} = 3.0 V		0.44	2.30	mA
				f_{IH} = 16 MHz Note 4	V_{DD} = 5.0 V		0.40	1.70	mA
					V_{DD} = 3.0 V		0.40	1.70	mA
			HS (high-speed main) mode Note 7	f_{MX} = 20 MHz Note 3, V_{DD} = 5.0 V	Square wave input		0.28	1.90	mA
					Resonator connection		0.45	2.00	mA
				f_{MX} = 20 MHz Note 3, V_{DD} = 3.0 V	Square wave input		0.28	1.90	mA
					Resonator connection		0.45	2.00	mA
				f_{MX} = 10 MHz Note 3, V_{DD} = 5.0 V	Square wave input		0.19	1.02	mA
					Resonator connection		0.26	1.10	mA
				f_{MX} = 10 MHz Note 3, V_{DD} = 3.0 V	Square wave input		0.19	1.02	mA
					Resonator connection		0.26	1.10	mA
			Subsystem clock operation	f_{SUB} = 32.768 kHz Note 5 T_A = –40°C	Square wave input		0.25	0.57	μA
					Resonator connection		0.44	0.76	μA
				f_{SUB} = 32.768 kHz Note 5 T_A = +25°C	Square wave input		0.30	0.57	μA
					Resonator connection		0.49	0.76	μA
				f_{SUB} = 32.768 kHz Note 5 T_A = +50°C	Square wave input		0.37	1.17	μA
					Resonator connection		0.56	1.36	μA
				f_{SUB} = 32.768 kHz Note 5 T_A = +70°C	Square wave input		0.53	1.97	μA
					Resonator connection		0.72	2.16	μA
				f_{SUB} = 32.768 kHz Note 5 T_A = +85°C	Square wave input		0.82	3.37	μA
					Resonator connection		1.01	3.56	μA
				f_{SUB} = 32.768 kHz Note 5 T_A = +105°C	Square wave input		3.01	15.37	μA
					Resonator connection		3.20	15.56	μA
	I_{DD3} Note 6	STOP mode Note 8	T_A = –40°C				0.18	0.50	μA
			T_A = +25°C				0.23	0.50	μA
			T_A = +50°C				0.30	1.10	μA
			T_A = +70°C				0.46	1.90	μA
			T_A = +85°C				0.75	3.30	μA
			T_A = +105°C				2.94	15.30	μA

(**Notes** and **Remarks** are listed on the next page.)

Notes 1. Total current flowing into V_{DD} and EV_{DD0}, including the input leakage current flowing when the level of the input pin is fixed to V_{DD}, EV_{DD0} or V_{SS}, EV_{SS0}. The values below the MAX. column include the peripheral operation current. However, not including the current flowing into the A/D converter, LVD circuit, I/O port, and on-chip pull-up/pull-down resistors and the current flowing during data flash rewrite.

2. During HALT instruction execution by flash memory.

3. When high-speed on-chip oscillator and subsystem clock are stopped.

4. When high-speed system clock and subsystem clock are stopped.

5. When high-speed on-chip oscillator and high-speed system clock are stopped. When RTCLPC = 1 and setting ultra-low current consumption (AMPHS1 = 1). The current flowing into the RTC is included. However, not including the current flowing into the 12-bit interval timer and watchdog timer.

6. Not including the current flowing into the RTC, 12-bit interval timer, and watchdog timer.

7. Relationship between operation voltage width, operation frequency of CPU and operation mode is as below.

HS (high-speed main) mode: $2.7\ V \leq V_{DD} \leq 5.5\ V$@1 MHz to 32 MHz
$2.4\ V \leq V_{DD} \leq 5.5\ V$@1 MHz to 16 MHz

8. Regarding the value for current operate the subsystem clock in STOP mode, refer to that in HALT mode.

Remarks 1. f_{MX}: High-speed system clock frequency (X1 clock oscillation frequency or external main system clock frequency)

2. f_{IH}: High-speed on-chip oscillator clock frequency

3. f_{SUB}: Subsystem clock frequency (XT1 clock oscillation frequency)

4. Except subsystem clock operation and STOP mode, temperature condition of the TYP. value is T_A = 25°C

(2) Flash ROM: 96 to 256 KB of 30- to 100-pin products

(T_A = –40 to +105°C, 2.4 V ≤ EV_{DD0} = EV_{DD1} ≤ V_{DD} ≤ 5.5 V, V_{SS} = EV_{SS0} = EV_{SS1} = 0 V) (1/2)

Parameter	Symbol	Conditions					MIN.	TYP.	MAX.	Unit
Supply current Note 1	I_{DD1}	Operating mode	HS (high-speed main) mode Note 5	f_{IH} = 32 MHz Note 3	Basic operation	V_{DD} = 5.0 V		2.3		mA
						V_{DD} = 3.0 V		2.3		mA
					Normal operation	V_{DD} = 5.0 V		5.2	9.2	mA
						V_{DD} = 3.0 V		5.2	9.2	mA
				f_{IH} = 24 MHz Note 3	Normal operation	V_{DD} = 5.0 V		4.1	7.0	mA
						V_{DD} = 3.0 V		4.1	7.0	mA
				f_{IH} = 16 MHz Note 3	Normal operation	V_{DD} = 5.0 V		3.0	5.0	mA
						V_{DD} = 3.0 V		3.0	5.0	mA
			HS (high-speed main) mode Note 5	f_{MX} = 20 MHz Note 2, V_{DD} = 5.0 V	Normal operation	Square wave input		3.4	5.9	mA
						Resonator connection		3.6	6.0	mA
				f_{MX} = 20 MHz Note 2, V_{DD} = 3.0 V	Normal operation	Square wave input		3.4	5.9	mA
						Resonator connection		3.6	6.0	mA
				f_{MX} = 10 MHz Note 2, V_{DD} = 5.0 V	Normal operation	Square wave input		2.1	3.5	mA
						Resonator connection		2.1	3.5	mA
				f_{MX} = 10 MHz Note 2, V_{DD} = 3.0 V	Normal operation	Square wave input		2.1	3.5	mA
						Resonator connection		2.1	3.5	mA
			Subsystem clock operation	f_{SUB} = 32.768 kHz Note 4 T_A = –40°C	Normal operation	Square wave input		4.8	5.9	μA
						Resonator connection		4.9	6.0	μA
				f_{SUB} = 32.768 kHz Note 4 T_A = +25°C	Normal operation	Square wave input		4.9	5.9	μA
						Resonator connection		5.0	6.0	μA
				f_{SUB} = 32.768 kHz Note 4 T_A = +50°C	Normal operation	Square wave input		5.0	7.6	μA
						Resonator connection		5.1	7.7	μA
				f_{SUB} = 32.768 kHz Note 4 T_A = +70°C	Normal operation	Square wave input		5.2	9.3	μA
						Resonator connection		5.3	9.4	μA
				f_{SUB} = 32.768 kHz Note 4 T_A = +85°C	Normal operation	Square wave input		5.7	13.3	μA
						Resonator connection		5.8	13.4	μA
				f_{SUB} = 32.768 kHz Note 4 T_A = +105°C	Normal operation	Square wave input		10.0	46.0	μA
						Resonator connection		10.0	46.0	μA

(**Notes** and **Remarks** are listed on the next page.)

Notes 1. Total current flowing into V_{DD}, EV_{DD0}, and EV_{DD1}, including the input leakage current flowing when the level of the input pin is fixed to V_{DD}, EV_{DD0}, and EV_{DD1}, or V_{SS}, EV_{SS0}, and EV_{SS1}. The values below the MAX. column include the peripheral operation current. However, not including the current flowing into the A/D converter, LVD circuit, I/O port, and on-chip pull-up/pull-down resistors and the current flowing during data flash rewrite.

2. When high-speed on-chip oscillator and subsystem clock are stopped.

3. When high-speed system clock and subsystem clock are stopped.

4. When high-speed on-chip oscillator and high-speed system clock are stopped. When AMPHS1 = 1 (Ultra-low power consumption oscillation). However, not including the current flowing into the 12-bit interval timer and watchdog timer.

5. Relationship between operation voltage width, operation frequency of CPU and operation mode is as below.

HS (high-speed main) mode: 2.7 V ≤ V_{DD} ≤ 5.5 V@1 MHz to 32 MHz
2.4 V ≤ V_{DD} ≤ 5.5 V@1 MHz to 16 MHz

Remarks 1. f_{MX}: High-speed system clock frequency (X1 clock oscillation frequency or external main system clock frequency)

2. f_{IH}: High-speed on-chip oscillator clock frequency

3. f_{SUB}: Subsystem clock frequency (XT1 clock oscillation frequency)

4. Except subsystem clock operation, temperature condition of the TYP. value is T_A = 25°C

(2) Flash ROM: 96 to 256 KB of 30- to 100-pin products

(T_A = –40 to +105°C, 2.4 V ≤ EV_{DD0} = EV_{DD1} ≤ V_{DD} ≤ 5.5 V, V_{SS} = EV_{SS0} = EV_{SS1} = 0 V) (2/2)

Parameter	Symbol	Conditions				MIN.	TYP.	MAX.	Unit
Supply current Note 1	I_{DD2} Note 2	HALT mode	HS (high-speed main) mode Note 7	f_{IH} = 32 MHz Note 4	V_{DD} = 5.0 V		0.62	3.40	mA
					V_{DD} = 3.0 V		0.62	3.40	mA
				f_{IH} = 24 MHz Note 4	V_{DD} = 5.0 V		0.50	2.70	mA
					V_{DD} = 3.0 V		0.50	2.70	mA
				f_{IH} = 16 MHz Note 4	V_{DD} = 5.0 V		0.44	1.90	mA
					V_{DD} = 3.0 V		0.44	1.90	mA
			HS (high-speed main) mode Note 7	f_{MX} = 20 MHz Note 3, V_{DD} = 5.0 V	Square wave input		0.31	2.10	mA
					Resonator connection		0.48	2.20	mA
				f_{MX} = 20 MHz Note 3, V_{DD} = 3.0 V	Square wave input		0.31	2.10	mA
					Resonator connection		0.48	2.20	mA
				f_{MX} = 10 MHz Note 3, V_{DD} = 5.0 V	Square wave input		0.21	1.10	mA
					Resonator connection		0.28	1.20	mA
				f_{MX} = 10 MHz Note 3, V_{DD} = 3.0 V	Square wave input		0.21	1.10	mA
					Resonator connection		0.28	1.20	mA
			Subsystem clock operation	f_{SUB} = 32.768 kHz Note 5 T_A = –40°C	Square wave input		0.28	0.61	μA
					Resonator connection		0.47	0.80	μA
				f_{SUB} = 32.768 kHz Note 5 T_A = +25°C	Square wave input		0.34	0.61	μA
					Resonator connection		0.53	0.80	μA
				f_{SUB} = 32.768 kHz Note 5 T_A = +50°C	Square wave input		0.41	2.30	μA
					Resonator connection		0.60	2.49	μA
				f_{SUB} = 32.768 kHz Note 5 T_A = +70°C	Square wave input		0.64	4.03	μA
					Resonator connection		0.83	4.22	μA
				f_{SUB} = 32.768 kHz Note 5 T_A = +85°C	Square wave input		1.09	8.04	μA
					Resonator connection		1.28	8.23	μA
				f_{SUB} = 32.768 kHz Note 5 T_A = +105°C	Square wave input		5.50	41.00	μA
					Resonator connection		5.50	41.00	μA
	I_{DD3} Note 6	STOP mode Note 8	T_A = –40°C				0.19	0.52	μA
			T_A = +25°C				0.25	0.52	μA
			T_A = +50°C				0.32	2.21	μA
			T_A = +70°C				0.55	3.94	μA
			T_A = +85°C				1.00	7.95	μA
			T_A = +105°C				5.00	40.00	μA

(**Notes** and **Remarks** are listed on the next page.)

Notes 1. Total current flowing into V_{DD}, EV_{DD0}, and EV_{DD1}, including the input leakage current flowing when the level of the input pin is fixed to V_{DD}, EV_{DD0}, and EV_{DD1}, or V_{SS}, EV_{SS0}, and EV_{SS1}. The values below the MAX. column include the peripheral operation current. However, not including the current flowing into the A/D converter, LVD circuit, I/O port, and on-chip pull-up/pull-down resistors and the current flowing during data flash rewrite.

2. During HALT instruction execution by flash memory.

3. When high-speed on-chip oscillator and subsystem clock are stopped.

4. When high-speed system clock and subsystem clock are stopped.

5. When high-speed on-chip oscillator and high-speed system clock are stopped. When RTCLPC = 1 and setting ultra-low current consumption (AMPHS1 = 1). The current flowing into the RTC is included. However, not including the current flowing into the 12-bit interval timer and watchdog timer.

6. Not including the current flowing into the RTC, 12-bit interval timer, and watchdog timer.

7. Relationship between operation voltage width, operation frequency of CPU and operation mode is as below.

HS (high-speed main) mode: 2.7 V ≤ V_{DD} ≤ 5.5 V@1 MHz to 32 MHz
2.4 V ≤ V_{DD} ≤ 5.5 V@1 MHz to 16 MHz

8. Regarding the value for current operate the subsystem clock in STOP mode, refer to that in HALT mode.

Remarks 1. f_{MX}: High-speed system clock frequency (X1 clock oscillation frequency or external main system clock frequency)

2. f_{IH}: High-speed on-chip oscillator clock frequency

3. f_{SUB}: Subsystem clock frequency (XT1 clock oscillation frequency)

4. Except subsystem clock operation and STOP mode, temperature condition of the TYP. value is T_A = 25°C

(3) Peripheral Functions (Common to all products)

(T_A = –40 to +105°C, 2.4 V ≤ EV_{DD0} = EV_{DD1} ≤ V_{DD} ≤ 5.5 V, V_{SS} = EV_{SS0} = EV_{SS1} = 0 V)

Parameter	Symbol	Conditions		MIN.	TYP.	MAX.	Unit
Low-speed on-chip oscillator operating current	I_{FIL} Note 1				0.20		μA
RTC operating current	I_{RTC} Notes 1, 2, 3				0.02		μA
12-bit interval timer operating current	I_{IT} Notes 1, 2, 4				0.02		μA
Watchdog timer operating current	I_{WDT} Notes 1, 2, 5	f_{IL} = 15 kHz			0.22		μA
A/D converter operating current	I_{ADC} Notes 1, 6	When conversion at maximum speed	Normal mode, AV_{REFP} = V_{DD} = 5.0 V		1.3	1.7	mA
			Low voltage mode, AV_{REFP} = V_{DD} = 3.0 V		0.5	0.7	mA
A/D converter reference voltage current	I_{ADREF} Note 1				75.0		μA
Temperature sensor operating current	I_{TMPS} Note 1				75.0		μA
LVD operating current	I_{LVD} Notes 1, 7				0.08		μA
Self programming operating current	I_{FSP} Notes 1, 9				2.50	12.20	mA
BGO operating current	I_{BGO} Notes 1, 8				2.50	12.20	mA
SNOOZE operating current	I_{SNOZ} Note 1	ADC operation	The mode is performed Note 10		0.50	1.10	mA
			The A/D conversion operations are performed, Loe voltage mode, AV_{REFP} = V_{DD} = 3.0 V		1.20	2.04	mA
		CSI/UART operation			0.70	1.54	mA

Notes 1. Current flowing to the V_{DD}.

2. When high speed on-chip oscillator and high-speed system clock are stopped.

3. Current flowing only to the real-time clock (RTC) (excluding the operating current of the low-speed on-chip oscillator and the XT1 oscillator). The supply current of the RL78 microcontrollers is the sum of the values of either I_{DD1} or I_{DD2}, and I_{RTC}, when the real-time clock operates in operation mode or HALT mode. When the low-speed on-chip oscillator is selected, I_{FIL} should be added. I_{DD2} subsystem clock operation includes the operational current of the real-time clock.

4. Current flowing only to the 12-bit interval timer (excluding the operating current of the low-speed on-chip oscillator and the XT1 oscillator). The supply current of the RL78 microcontrollers is the sum of the values of either I_{DD1} or I_{DD2}, and I_{IT}, when the 12-bit interval timer operates in operation mode or HALT mode. When the low-speed on-chip oscillator is selected, I_{FIL} should be added.

5. Current flowing only to the watchdog timer (including the operating current of the low-speed on-chip oscillator). The supply current of the RL78 is the sum of I_{DD1}, I_{DD2} or I_{DD3} and I_{WDT} when the watchdog timer operates.

6. Current flowing only to the A/D converter. The supply current of the RL78 microcontrollers is the sum of I_{DD1} or I_{DD2} and I_{ADC} when the A/D converter is in operation.

7. Current flowing only to the LVD circuit. The supply current of the RL78 microcontrollers is the sum of I_{DD1}, I_{DD2} or I_{DD3} and I_{LVD} when the LVD circuit is in operation.

8. Current flowing only during data flash rewrite.

9. Current flowing only during self programming.

10. For shift time to the SNOOZE mode, see **18.3.3 SNOOZE mode** in the RL78/G13 User's Manual.

Remarks 1. f_{IL}: Low-speed on-chip oscillator clock frequency

2. f_{SUB}: Subsystem clock frequency (XT1 clock oscillation frequency)

3. f_{CLK}: CPU/peripheral hardware clock frequency

4. Temperature condition of the TYP. value is T_A = 25°C

3.4 AC Characteristics

(T_A = –40 to +105°C, 2.4 V ≤ EV_{DD0} = EV_{DD1} ≤ V_{DD} ≤ 5.5 V, V_{SS} = EV_{SS0} = EV_{SS1} = 0 V)

Items	Symbol	Conditions			MIN.	TYP.	MAX.	Unit
Instruction cycle (minimum instruction execution time)	T_{CY}	Main system clock (f_{MAIN}) operation	HS (high-speed main) mode	2.7 V ≤ V_{DD} ≤ 5.5 V	0.03125		1	μs
				2.4 V ≤ V_{DD} < 2.7 V	0.0625		1	μs
		Subsystem clock (f_{SUB}) operation		2.4 V ≤ V_{DD} ≤ 5.5 V	28.5	30.5	31.3	μs
		In the self programming mode	HS (high-speed main) mode	2.7 V ≤ V_{DD} ≤ 5.5 V	0.03125		1	μs
				2.4 V ≤ V_{DD} < 2.7 V	0.0625		1	μs
External system clock frequency	f_{EX}	2.7 V ≤ V_{DD} ≤ 5.5 V			1.0		20.0	MHz
		2.4 V ≤ V_{DD} < 2.7 V			1.0		16.0	MHz
	f_{EXS}				32		35	kHz
External system clock input high-level width, low-level width	t_{EXH}, t_{EXL}	2.7 V ≤ V_{DD} ≤ 5.5 V			24			ns
		2.4 V ≤ V_{DD} < 2.7 V			30			ns
	t_{EXHS}, t_{EXLS}				13.7			μs
TI00 to TI07, TI10 to TI17 input high-level width, low-level width	t_{TIH}, t_{TIL}				1/f_{MCK}+10			ns[Note]
TO00 to TO07, TO10 to TO17 output frequency	f_{TO}	HS (high-speed main) mode		4.0 V ≤ EV_{DD0} ≤ 5.5 V			16	MHz
				2.7 V ≤ EV_{DD0} < 4.0 V			8	MHz
				2.4 V ≤ EV_{DD0} < 2.7 V			4	MHz
PCLBUZ0, PCLBUZ1 output frequency	f_{PCL}	HS (high-speed main) mode		4.0 V ≤ EV_{DD0} ≤ 5.5 V			16	MHz
				2.7 V ≤ EV_{DD0} < 4.0 V			8	MHz
				2.4 V ≤ EV_{DD0} < 2.7 V			4	MHz
Interrupt input high-level width, low-level width	t_{INTH}, t_{INTL}	INTP0		2.4 V ≤ V_{DD} ≤ 5.5 V	1			μs
		INTP1 to INTP11		2.4 V ≤ EV_{DD0} ≤ 5.5 V	1			μs
Key interrupt input low-level width	t_{KR}	KR0 to KR7		2.4 V ≤ EV_{DD0} ≤ 5.5 V	250			ns
$\overline{RESET}$ low-level width	t_{RSL}				10			μs

Note The following conditions are required for low voltage interface when EV_{DD0} < V_{DD}
2.4V ≤ EV_{DD0} < 2.7 V : MIN. 125 ns

Remark f_{MCK}: Timer array unit operation clock frequency
(Operation clock to be set by the CKSmn0, CKSmn1 bits of timer mode register mn (TMRmn).
m: Unit number (m = 0, 1), n: Channel number (n = 0 to 7))

Minimum Instruction Execution Time during Main System Clock Operation

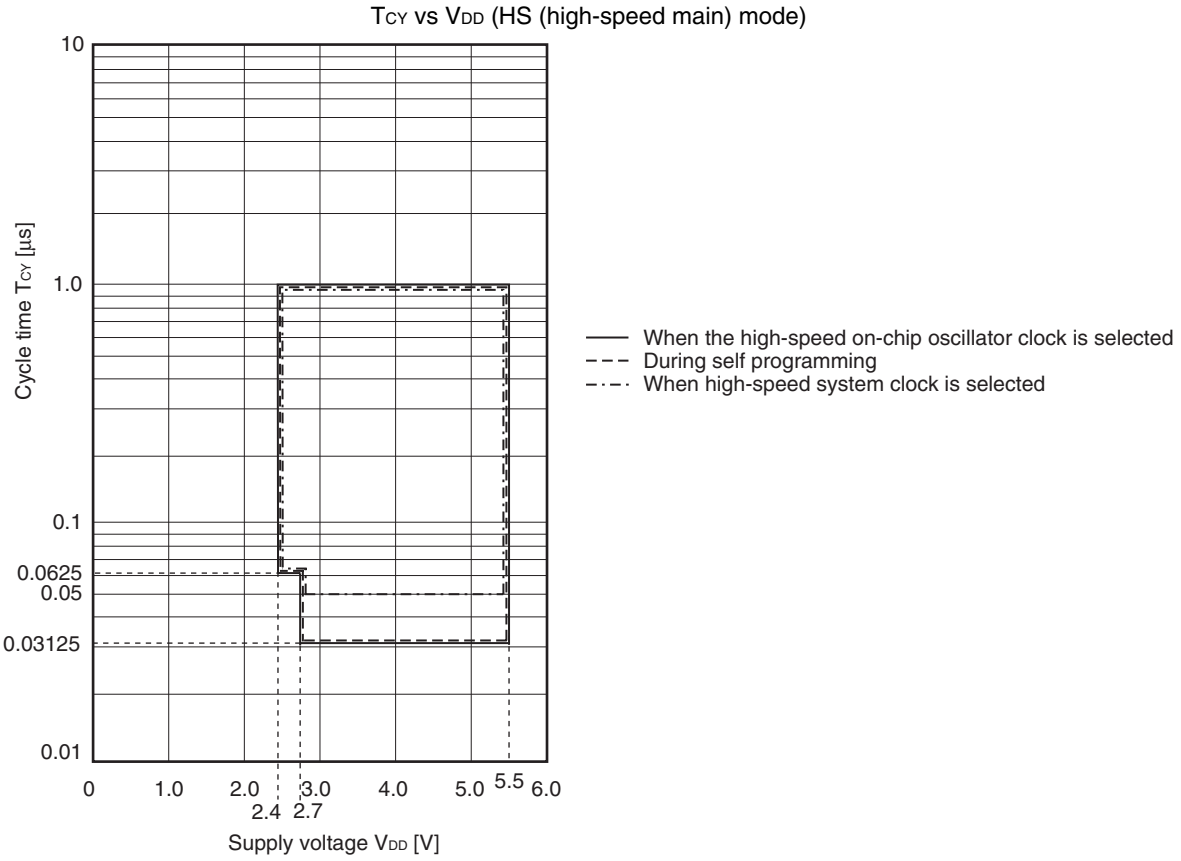

AC Timing Test Points

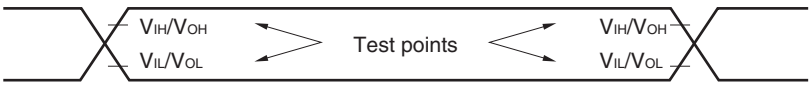

External System Clock Timing

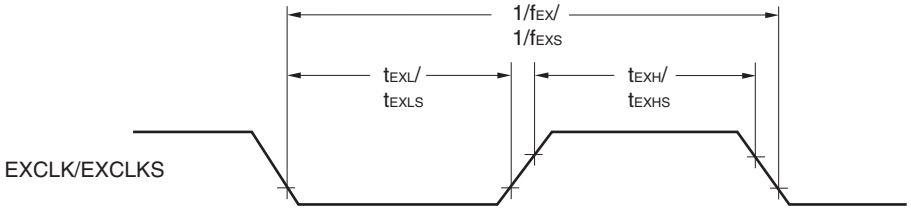

TI/TO Timing

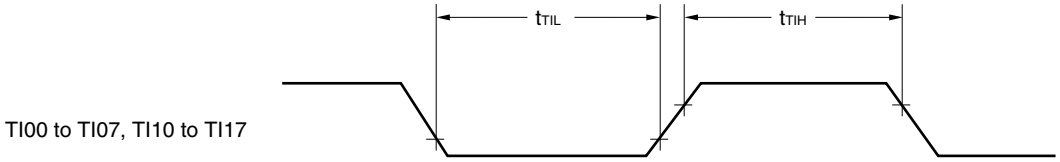

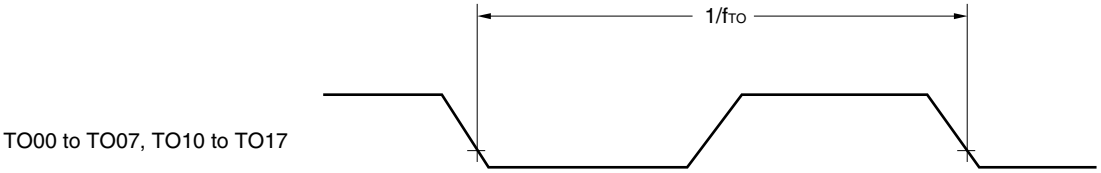

Interrupt Request Input Timing

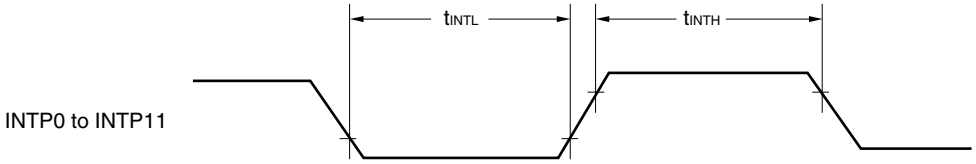

Key Interrupt Input Timing

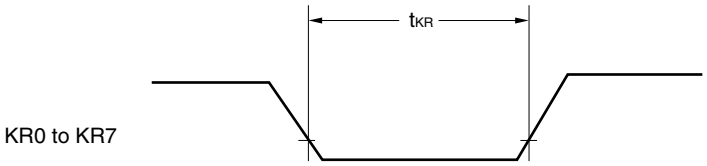

$\overline{\text{RESET}}$ Input Timing

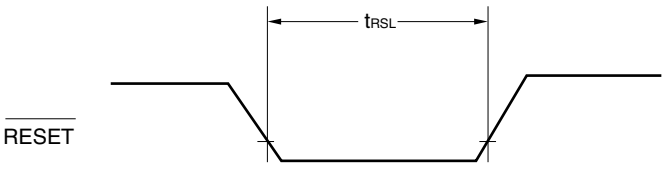

3.5 Peripheral Functions Characteristics

AC Timing Test Points

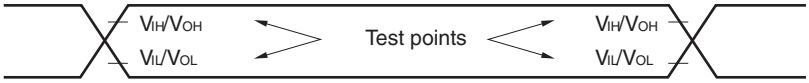

3.5.1 Serial array unit

(1) During communication at same potential (UART mode)

(T_A = –40 to +105°C, 2.4 V ≤ EV_{DD0} = EV_{DD1} ≤ V_{DD} ≤ 5.5 V, V_{SS} = EV_{SS0} = EV_{SS1} = 0 V)

Parameter	Symbol	Conditions	HS (high-speed main) Mode		Unit
			MIN.	MAX.	
Transfer rate Note 1				f_{MCK}/12 Note 2	bps
		Theoretical value of the maximum transfer rate f_{CLK} = 32 MHz, f_{MCK} = f_{CLK}		2.6	Mbps

Notes 1. Transfer rate in the SNOOZE mode is 4800 bps only.

2. The following conditions are required for low voltage interface when EV_{DD0} < V_{DD}.
2.4 V ≤ EV_{DD0} < 2.7 V : MAX. 1.3 Mbps

Caution Select the normal input buffer for the RxDq pin and the normal output mode for the TxDq pin by using port input mode register g (PIMg) and port output mode register g (POMg).

UART mode connection diagram (during communication at same potential)

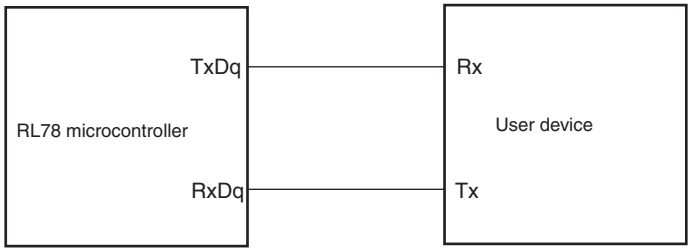

UART mode bit width (during communication at same potential) (reference)

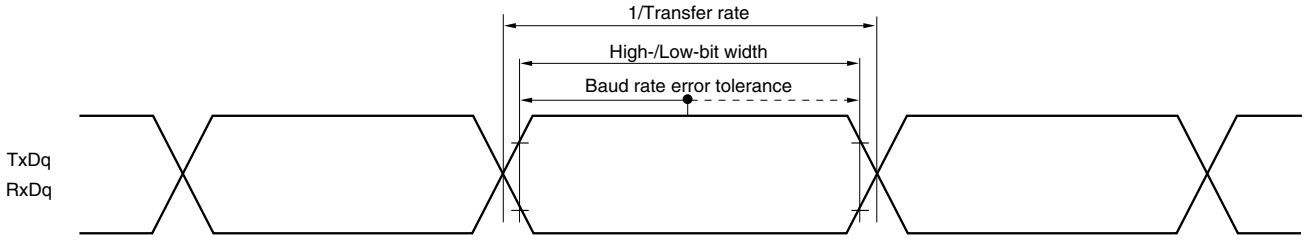

Remarks 1. q: UART number (q = 0 to 3), g: PIM and POM number (g = 0, 1, 8, 14)

2. f_{MCK}: Serial array unit operation clock frequency
(Operation clock to be set by the CKSmn bit of serial mode register mn (SMRmn). m: Unit number, n: Channel number (mn = 00 to 03, 10 to 13))

(2) During communication at same potential (CSI mode) (master mode, SCKp... internal clock output)

(T_A = –40 to +105°C, 2.4 V ≤ EV_{DD0} = EV_{DD1} ≤ V_{DD} ≤ 5.5 V, V_{SS} = EV_{SS0} = EV_{SS1} = 0 V)

Parameter	Symbol	Conditions		HS (high-speed main) Mode		Unit
				MIN.	MAX.	
SCKp cycle time	t_{KCY1}	$t_{KCY1} \geq 4/f_{CLK}$	2.7 V ≤ EV_{DD0} ≤ 5.5 V	250		ns
			2.4 V ≤ EV_{DD0} ≤ 5.5 V	500		ns
SCKp high-/low-level width	t_{KH1}, t_{KL1}	4.0 V ≤ EV_{DD0} ≤ 5.5 V		t_{KCY1}/2 – 24		ns
		2.7 V ≤ EV_{DD0} ≤ 5.5 V		t_{KCY1}/2 – 36		ns
		2.4 V ≤ EV_{DD0} ≤ 5.5 V		t_{KCY1}/2 – 76		ns
SIp setup time (to SCKp↑) Note 1	t_{SIK1}	4.0 V ≤ EV_{DD0} ≤ 5.5 V		66		ns
		2.7 V ≤ EV_{DD0} ≤ 5.5 V		66		ns
		2.4 V ≤ EV_{DD0} ≤ 5.5 V		113		ns
SIp hold time (from SCKp↑) Note 2	t_{KSI1}			38		ns
Delay time from SCKp↓ to SOp output Note 3	t_{KSO1}	C = 30 pF Note 4			50	ns

Notes 1. When DAPmn = 0 and CKPmn = 0, or DAPmn = 1 and CKPmn = 1. The SIp setup time becomes "to SCKp↓" when DAPmn = 0 and CKPmn = 1, or DAPmn = 1 and CKPmn = 0.

2. When DAPmn = 0 and CKPmn = 0, or DAPmn = 1 and CKPmn = 1. The SIp hold time becomes "from SCKp↓" when DAPmn = 0 and CKPmn = 1, or DAPmn = 1 and CKPmn = 0.

3. When DAPmn = 0 and CKPmn = 0, or DAPmn = 1 and CKPmn = 1. The delay time to SOp output becomes "from SCKp↑" when DAPmn = 0 and CKPmn = 1, or DAPmn = 1 and CKPmn = 0.

4. C is the load capacitance of the SCKp and SOp output lines.

Caution Select the normal input buffer for the SIp pin and the normal output mode for the SOp pin and SCKp pin by using port input mode register g (PIMg) and port output mode register g (POMg).

Remarks 1. p: CSI number (p = 00, 01, 10, 11, 20, 21, 30, 31), m: Unit number (m = 0, 1), n: Channel number (n = 0 to 3),
g: PIM and POM numbers (g = 0, 1, 4, 5, 8, 14)

2. f_{MCK}: Serial array unit operation clock frequency
(Operation clock to be set by the CKSmn bit of serial mode register mn (SMRmn). m: Unit number, n: Channel number (mn = 00 to 03, 10 to 13))

(3) During communication at same potential (CSI mode) (slave mode, SCKp... external clock input)

(T_A = –40 to +105°C, 2.4 V ≤ EV_{DD0} = EV_{DD1} ≤ V_{DD} ≤ 5.5 V, V_{SS} = EV_{SS0} = EV_{SS1} = 0 V)

Parameter	Symbol	Conditions		HS (high-speed main) Mode		Unit
				MIN.	MAX.	
SCKp cycle time Note 5	t_{KCY2}	4.0 V ≤ EV_{DD0} ≤ 5.5 V	20 MHz < f_{MCK}	16/f_{MCK}		ns
			f_{MCK} ≤ 20 MHz	12/f_{MCK}		ns
		2.7 V ≤ EV_{DD0} ≤ 5.5 V	16 MHz < f_{MCK}	16/f_{MCK}		ns
			f_{MCK} ≤ 16 MHz	12/f_{MCK}		ns
		2.4 V ≤ EV_{DD0} ≤ 5.5 V		16/f_{MCK}		ns
				12/f_{MCK} and 1000		ns
SCKp high-/low-level width	t_{KH2}, t_{KL2}	4.0 V ≤ EV_{DD0} ≤ 5.5 V		t_{KCY2}/2 – 14		ns
		2.7 V ≤ EV_{DD0} ≤ 5.5 V		t_{KCY2}/2 – 16		ns
		2.4 V ≤ EV_{DD0} ≤ 5.5 V		t_{KCY2}/2 – 36		ns
SIp setup time (to SCKp↑) Note 1	t_{SIK2}	2.7 V ≤ EV_{DD0} ≤ 5.5 V		1/f_{MCK}+40		ns
		2.4 V ≤ EV_{DD0} ≤ 5.5 V		1/f_{MCK}+60		ns
SIp hold time (from SCKp↑) Note 2	t_{KSI2}	2.4 V ≤ EV_{DD0} ≤ 5.5 V		1/f_{MCK}+62		ns
Delay time from SCKp↓ to SOp output Note 3	t_{KSO2}	C = 30 pF Note 4	2.7 V ≤ EV_{DD0} ≤ 5.5 V		2/f_{MCK}+66	ns
			2.4 V ≤ EV_{DD0} ≤ 5.5 V		2/f_{MCK}+113	ns

Notes 1. When DAPmn = 0 and CKPmn = 0, or DAPmn = 1 and CKPmn = 1. The SIp setup time becomes "to SCKp↓" when DAPmn = 0 and CKPmn = 1, or DAPmn = 1 and CKPmn = 0.

2. When DAPmn = 0 and CKPmn = 0, or DAPmn = 1 and CKPmn = 1. The SIp hold time becomes "from SCKp↓" when DAPmn = 0 and CKPmn = 1, or DAPmn = 1 and CKPmn = 0.

3. When DAPmn = 0 and CKPmn = 0, or DAPmn = 1 and CKPmn = 1. The delay time to SOp output becomes "from SCKp↑" when DAPmn = 0 and CKPmn = 1, or DAPmn = 1 and CKPmn = 0.

4. C is the load capacitance of the SOp output lines.

5. Transfer rate in the SNOOZE mode : MAX. 1 Mbps

Caution Select the normal input buffer for the SIp pin and SCKp pin and the normal output mode for the SOp pin by using port input mode register g (PIMg) and port output mode register g (POMg).

Remarks 1. p: CSI number (p = 00, 01, 10, 11, 20, 21, 30, 31), m: Unit number (m = 0, 1), n: Channel number (n = 0 to 3), g: PIM number (g = 0, 1, 4, 5, 8, 14)

2. f_{MCK}: Serial array unit operation clock frequency

(Operation clock to be set by the CKSmn bit of serial mode register mn (SMRmn). m: Unit number, n: Channel number (mn = 00 to 03, 10 to 13))

CSI mode connection diagram (during communication at same potential)

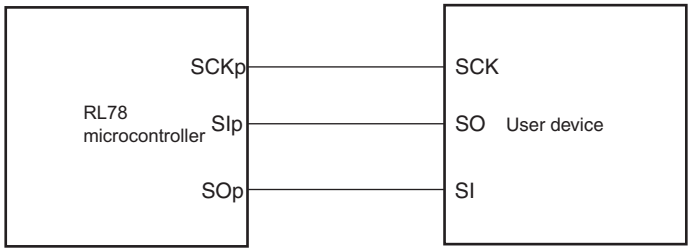

CSI mode serial transfer timing (during communication at same potential)
(When DAPmn = 0 and CKPmn = 0, or DAPmn = 1 and CKPmn = 1.)

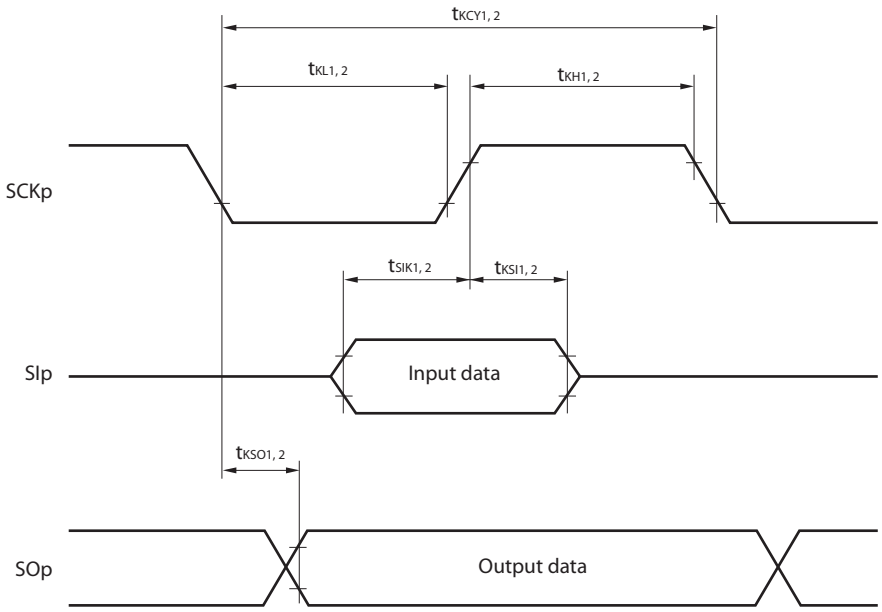

CSI mode serial transfer timing (during communication at same potential)
(When DAPmn = 0 and CKPmn = 1, or DAPmn = 1 and CKPmn = 0.)

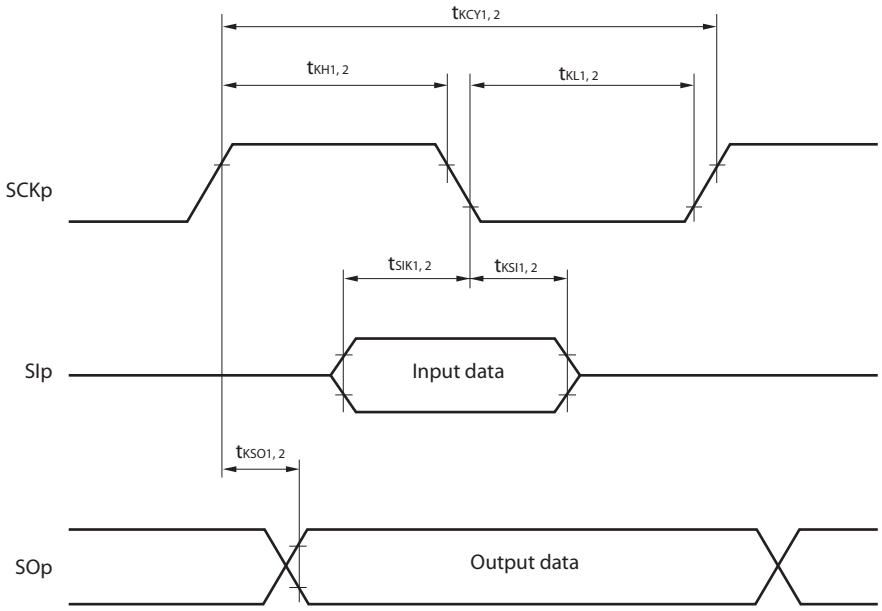

Remarks 1. p: CSI number (p = 00, 01, 10, 11, 20, 21, 30, 31)

2. m: Unit number, n: Channel number (mn = 00 to 03, 10 to 13)

(4) During communication at same potential (simplified I^2C mode)

(T_A = –40 to +105°C, 2.4 V ≤ EV_{DD0} = EV_{DD1} ≤ V_{DD} ≤ 5.5 V, V_{SS} = EV_{SS0} = EV_{SS1} = 0 V)

Parameter	Symbol	Conditions	HS (high-speed main) Mode		Unit
			MIN.	MAX.	
SCLr clock frequency	f_{SCL}	2.7 V ≤ EV_{DD0} ≤ 5.5 V, C_b = 50 pF, R_b = 2.7 kΩ		400 Note1	kHz
		2.4 V ≤ EV_{DD0} ≤ 5.5 V, C_b = 100 pF, R_b = 3 kΩ		100 Note1	kHz
Hold time when SCLr = “L”	t_{LOW}	2.7 V ≤ EV_{DD0} ≤ 5.5 V, C_b = 50 pF, R_b = 2.7 kΩ	1200		ns
		2.4 V ≤ EV_{DD0} ≤ 5.5 V, C_b = 100 pF, R_b = 3 kΩ	4600		ns
Hold time when SCLr = “H”	t_{HIGH}	2.7 V ≤ EV_{DD0} ≤ 5.5 V, C_b = 50 pF, R_b = 2.7 kΩ	1200		ns
		2.4 V ≤ EV_{DD0} ≤ 5.5 V, C_b = 100 pF, R_b = 3 kΩ	4600		ns
Data setup time (reception)	$t_{SU:DAT}$	2.7 V ≤ EV_{DD0} ≤ 5.5 V, C_b = 50 pF, R_b = 2.7 kΩ	1/f_{MCK} + 220 Note2		ns
		2.4 V ≤ EV_{DD} ≤ 5.5 V, C_b = 100 pF, R_b = 3 kΩ	1/f_{MCK} + 580 Note2		ns
Data hold time (transmission)	$t_{HD:DAT}$	2.7 V ≤ EV_{DD0} ≤ 5.5 V, C_b = 50 pF, R_b = 2.7 kΩ	0	770	ns
		2.4 V ≤ EV_{DD0} ≤ 5.5 V, C_b = 100 pF, R_b = 3 kΩ	0	1420	ns

Notes 1. The value must also be equal to or less than f_{MCK}/4.

2. Set the f_{MCK} value to keep the hold time of SCLr = "L" and SCLr = "H".

Caution Select the normal input buffer and the N-ch open drain output (V_{DD} tolerance (for the 20- to 52-pin products)/EV_{DD} tolerance (for the 64- to 100-pin products)) mode for the SDAr pin and the normal output mode for the SCLr pin by using port input mode register g (PIMg) and port output mode register h (POMh).

(**Remarks** are listed on the next page.)

Simplified I²C mode mode connection diagram (during communication at same potential)

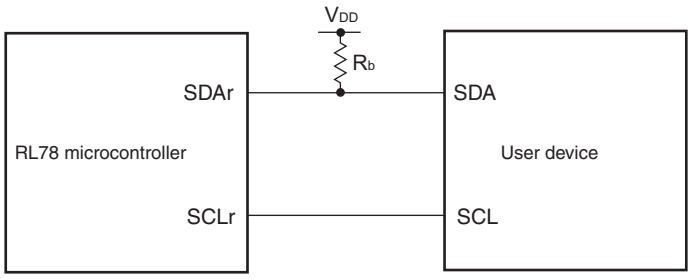

Simplified I²C mode serial transfer timing (during communication at same potential)

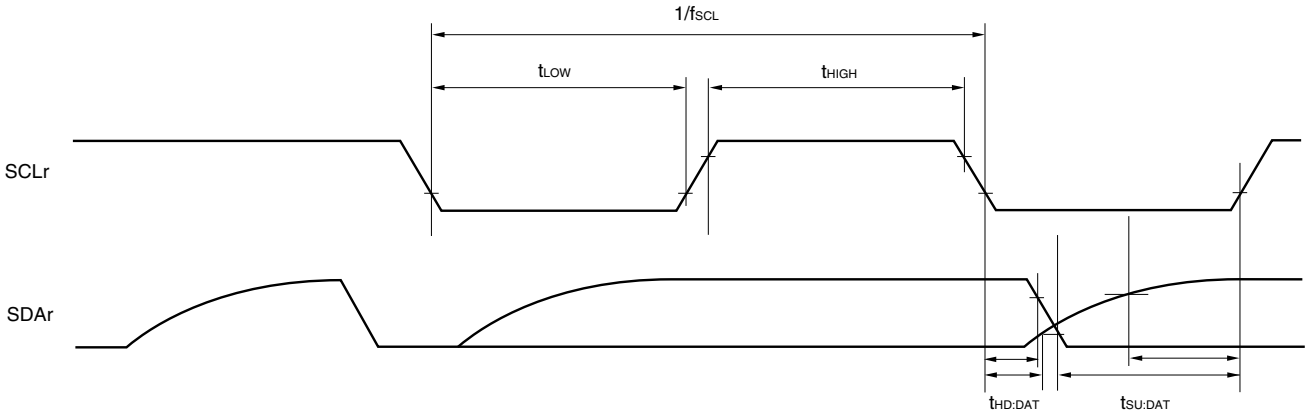

Remarks 1. R_b[Ω]:Communication line (SDAr) pull-up resistance, C_b[F]: Communication line (SDAr, SCLr) load capacitance

2. r: IIC number (r = 00, 01, 10, 11, 20, 21, 30, 31), g: PIM number (g = 0, 1, 4, 5, 8, 14), h: POM number (g = 0, 1, 4, 5, 7 to 9, 14)

3. f_{MCK}: Serial array unit operation clock frequency

(Operation clock to be set by the CKSmn bit of serial mode register mn (SMRmn). m: Unit number (m = 0, 1), n: Channel number (n = 0 to 3), mn = 00 to 03, 10 to 13)

(5) Communication at different potential (1.8 V, 2.5 V, 3 V) (UART mode) (1/2)

(T_A = –40 to +105°C, 2.4 V ≤ EV_{DD0} = EV_{DD1} ≤ V_{DD} ≤ 5.5 V, V_{SS} = EV_{SS0} = EV_{SS1} = 0 V)

Parameter	Symbol	Conditions			HS (high-speed main) Mode		Unit
					MIN.	MAX.	
Transfer rate		Reception	4.0 V ≤ EV_{DD0} ≤ 5.5 V, 2.7 V ≤ V_b ≤ 4.0 V			f_{MCK}/12 Note 1	bps
				Theoretical value of the maximum transfer rate f_{CLK} = 32 MHz, f_{MCK} = f_{CLK}		2.6	Mbps
			2.7 V ≤ EV_{DD0} < 4.0 V, 2.3 V ≤ V_b ≤ 2.7 V			f_{MCK}/12 Note 1	bps
				Theoretical value of the maximum transfer rate f_{CLK} = 32 MHz, f_{MCK} = f_{CLK}		2.6	Mbps
			2.4 V ≤ EV_{DD0} < 3.3 V, 1.6 V ≤ V_b ≤ 2.0 V			f_{MCK}/12 Notes 1,2	bps
				Theoretical value of the maximum transfer rate f_{CLK} = 32 MHz, f_{MCK} = f_{CLK}		2.6	Mbps

Notes 1. Transfer rate in the SNOOZE mode is 4800 bps only.

2. The following conditions are required for low voltage interface when EV_{DD0} < V_{DD}.
2.4 V ≤ EV_{DD0} < 2.7 V : MAX. 1.3 Mbps

Caution Select the TTL input buffer for the RxDq pin and the N-ch open drain output (V_{DD} tolerance (for the 20- to 52-pin products)/EV_{DD} tolerance (for the 64- to 100-pin products)) mode for the TxDq pin by using port input mode register g (PIMg) and port output mode register g (POMg). For V_{IH} and V_{IL}, see the DC characteristics with TTL input buffer selected.

Remarks 1. V_b[V]: Communication line voltage

2. q: UART number (q = 0 to 3), g: PIM and POM number (g = 0, 1, 8, 14)

3. f_{MCK}: Serial array unit operation clock frequency
(Operation clock to be set by the CKSmn bit of serial mode register mn (SMRmn). m: Unit number, n: Channel number (mn = 00 to 03, 10 to 13)

4. UART2 cannot communicate at different potential when bit 1 (PIOR1) of peripheral I/O redirection register (PIOR) is 1.

(5) Communication at different potential (1.8 V, 2.5 V, 3 V) (UART mode) (2/2)

(T_A = –40 to +105°C, 2.4 V ≤ EV_{DD0} = EV_{DD1} ≤ V_{DD} ≤ 5.5 V, V_{SS} = EV_{SS0} = EV_{SS1} = 0 V)

Parameter	Symbol	Conditions			HS (high-speed main) Mode		Unit
					MIN.	MAX.	
Transfer rate		Transmission	4.0 V ≤ EV_{DD0} ≤ 5.5 V, 2.7 V ≤ V_b ≤ 4.0 V			**Note 1**	bps
				Theoretical value of the maximum transfer rate C_b = 50 pF, R_b = 1.4 kΩ, V_b = 2.7 V		2.6 Note 2	Mbps
			2.7 V ≤ EV_{DD0} < 4.0 V, 2.3 V ≤ V_b ≤ 2.7 V			**Note 3**	bps
				Theoretical value of the maximum transfer rate C_b = 50 pF, R_b = 2.7 kΩ, V_b = 2.3 V		1.2 Note 4	Mbps
			2.4 V ≤ EV_{DD0} < 3.3 V, 1.6 V ≤ V_b ≤ 2.0 V			**Note 5**	bps
				Theoretical value of the maximum transfer rate C_b = 50 pF, R_b = 5.5 kΩ, V_b = 1.6 V		0.43 Note 6	Mbps

Notes 1. The smaller maximum transfer rate derived by using f_{MCK}/12 or the following expression is the valid maximum transfer rate.

Expression for calculating the transfer rate when 4.0 V ≤ EV_{DD0} ≤ 5.5 V and 2.7 V ≤ V_b ≤ 4.0 V

$$\text{Maximum transfer rate} = \frac{1}{\{-C_b \times R_b \times \ln(1 - \frac{2.2}{V_b})\} \times 3} \text{ [bps]}$$

$$\text{Baud rate error (theoretical value)} = \frac{\frac{1}{\text{Transfer rate} \times 2} - \{-C_b \times R_b \times \ln(1 - \frac{2.2}{V_b})\}}{(\frac{1}{\text{Transfer rate}}) \times \text{Number of transferred bits}} \times 100 \text{ [\%]}$$

* This value is the theoretical value of the relative difference between the transmission and reception sides.

2. This value as an example is calculated when the conditions described in the “Conditions” column are met. Refer to Note 1 above to calculate the maximum transfer rate under conditions of the customer.

3. The smaller maximum transfer rate derived by using f_{MCK}/12 or the following expression is the valid maximum transfer rate.

Expression for calculating the transfer rate when 2.7 V ≤ EV_{DD0} < 4.0 V and 2.4 V ≤ V_b ≤ 2.7 V

$$\text{Maximum transfer rate} = \frac{1}{\{-C_b \times R_b \times \ln(1 - \frac{2.0}{V_b})\} \times 3} \text{ [bps]}$$

$$\text{Baud rate error (theoretical value)} = \frac{\frac{1}{\text{Transfer rate} \times 2} - \{-C_b \times R_b \times \ln(1 - \frac{2.0}{V_b})\}}{(\frac{1}{\text{Transfer rate}}) \times \text{Number of transferred bits}} \times 100 \text{ [\%]}$$

* This value is the theoretical value of the relative difference between the transmission and reception sides.

4. This value as an example is calculated when the conditions described in the “Conditions” column are met. Refer to Note 3 above to calculate the maximum transfer rate under conditions of the customer.

5. The smaller maximum transfer rate derived by using f_{MCK}/12 or the following expression is the valid maximum transfer rate.
Expression for calculating the transfer rate when 2.4 V ≤ EV_{DD0} < 3.3 V and 1.6 V ≤ V_b ≤ 2.0 V

$$\text{Maximum transfer rate} = \frac{1}{\{-C_b \times R_b \times \ln(1 - \frac{1.5}{V_b})\} \times 3} \text{ [bps]}$$

$$\text{Baud rate error (theoretical value)} = \frac{\frac{1}{\text{Transfer rate} \times 2} - \{-C_b \times R_b \times \ln(1 - \frac{1.5}{V_b})\}}{(\frac{1}{\text{Transfer rate}}) \times \text{Number of transferred bits}} \times 100 \text{ [\%]}$$

* This value is the theoretical value of the relative difference between the transmission and reception sides.

6. This value as an example is calculated when the conditions described in the “Conditions” column are met. Refer to Note 5 above to calculate the maximum transfer rate under conditions of the customer.

Caution Select the TTL input buffer for the RxDq pin and the N-ch open drain output (V_{DD} tolerance (for the 20- to 52-pin products)/EV_{DD} tolerance (for the 64- to 100-pin products)) mode for the TxDq pin by using port input mode register g (PIMg) and port output mode register g (POMg). For V_{IH} and V_{IL}, see the DC characteristics with TTL input buffer selected.

UART mode connection diagram (during communication at different potential)

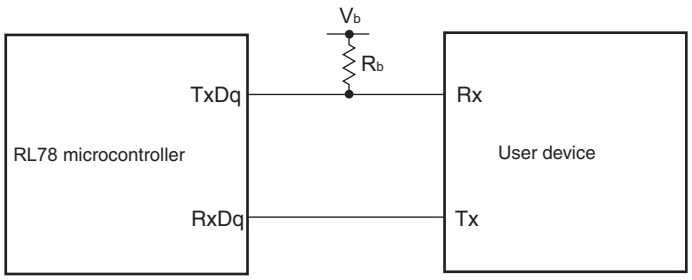

UART mode bit width (during communication at different potential) (reference)

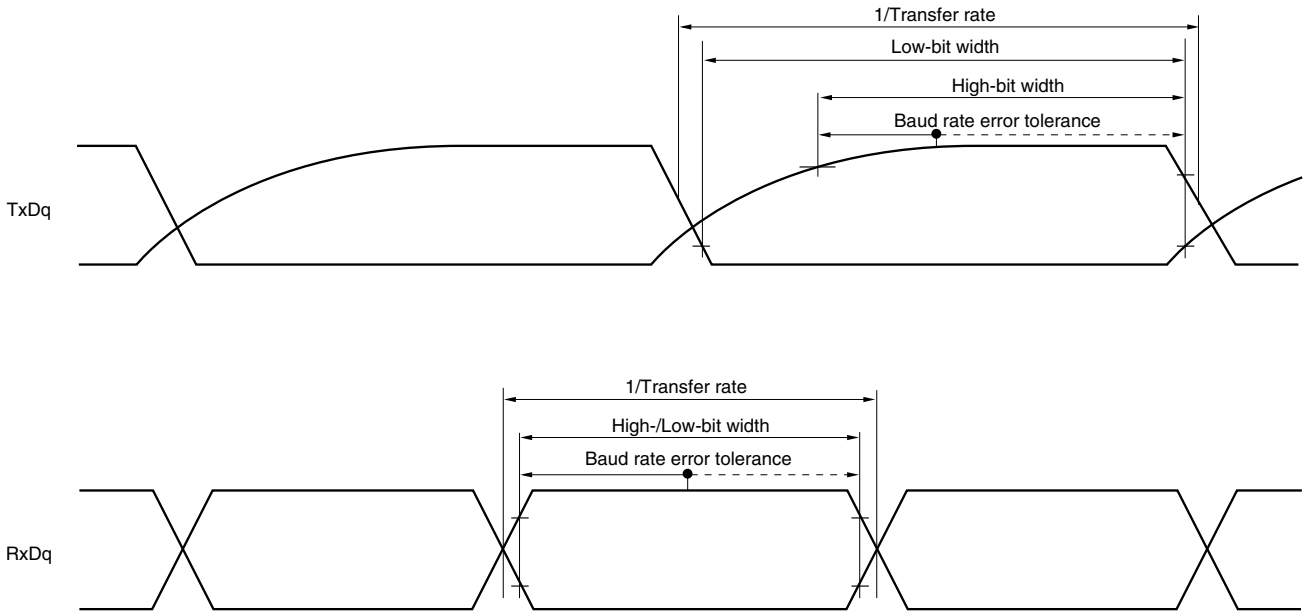

Remarks 1. R_b[Ω]:Communication line (TxDq) pull-up resistance,
C_b[F]: Communication line (TxDq) load capacitance, V_b[V]: Communication line voltage

2. q: UART number (q = 0 to 3), g: PIM and POM number (g = 0, 1, 8, 14)

3. f_{MCK}: Serial array unit operation clock frequency

(Operation clock to be set by the CKSmn bit of serial mode register mn (SMRmn).

m: Unit number, n: Channel number (mn = 00 to 03, 10 to 13))

4. UART2 cannot communicate at different potential when bit 1 (PIOR1) of peripheral I/O redirection register (PIOR) is 1.

(6) Communication at different potential (1.8 V, 2.5 V, 3 V) (CSI mode) (master mode, SCKp... internal clock output) (1/3)

(T_A = –40 to +105°C, 2.4 V ≤ EV_{DD0} = EV_{DD1} ≤ V_{DD} ≤ 5.5 V, V_{SS} = EV_{SS0} = EV_{SS1} = 0 V)

Parameter	Symbol	Conditions		HS (high-speed main) Mode		Unit
				MIN.	MAX.	
SCKp cycle time	t_{KCY1}	t_{KCY1} ≥ 4/f_{CLK}	4.0 V ≤ EV_{DD0} ≤ 5.5 V, 2.7 V ≤ V_b ≤ 4.0 V, C_b = 30 pF, R_b = 1.4 kΩ	600		ns
			2.7 V ≤ EV_{DD0} < 4.0 V, 2.3 V ≤ V_b ≤ 2.7 V, C_b = 30 pF, R_b = 2.7 kΩ	1000		ns
			2.4 V ≤ EV_{DD0} < 3.3 V, 1.6 V ≤ V_b ≤ 2.0 V, C_b = 30 pF, R_b = 5.5 kΩ	2300		ns
SCKp high-level width	t_{KH1}	4.0 V ≤ EV_{DD0} ≤ 5.5 V, 2.7 V ≤ V_b ≤ 4.0 V, C_b = 30 pF, R_b = 1.4 kΩ		t_{KCY1}/2 – 150		ns
		2.7 V ≤ EV_{DD0} < 4.0 V, 2.3 V ≤ V_b ≤ 2.7 V, C_b = 30 pF, R_b = 2.7 kΩ		t_{KCY1}/2 – 340		ns
		2.4 V ≤ EV_{DD0} < 3.3 V, 1.6 V ≤ V_b ≤ 2.0 V, C_b = 30 pF, R_b = 5.5 kΩ		t_{KCY1}/2 – 916		ns
SCKp low-level width	t_{KL1}	4.0 V ≤ EV_{DD0} ≤ 5.5 V, 2.7 V ≤ V_b ≤ 4.0 V, C_b = 30 pF, R_b = 1.4 kΩ		t_{KCY1}/2 – 24		ns
		2.7 V ≤ EV_{DD0} < 4.0 V, 2.3 V ≤ V_b ≤ 2.7 V, C_b = 30 pF, R_b = 2.7 kΩ		t_{KCY1}/2 – 36		ns
		2.4 V ≤ EV_{DD0} < 3.3 V, 1.6 V ≤ V_b ≤ 2.0 V, C_b = 30 pF, R_b = 5.5 kΩ		t_{KCY1}/2 – 100		ns

Caution Select the TTL input buffer for the SIp pin and the N-ch open drain output (V_{DD} tolerance (for the 20- to 52-pin products)/EV_{DD} tolerance (for the 64- to 100-pin products)) mode for the SOp pin and SCKp pin by using port input mode register g (PIMg) and port output mode register g (POMg). For V_{IH} and V_{IL}, see the DC characteristics with TTL input buffer selected.

(**Remarks** are listed two pages after the next page.)

(6) Communication at different potential (1.8 V, 2.5 V, 3 V) (CSI mode) (master mode, SCKp... internal clock output) (2/3)

(T_A = –40 to +105°C, 2.4 V ≤ EV_{DD0} = EV_{DD1} ≤ V_{DD} ≤ 5.5 V, V_{SS} = EV_{SS0} = EV_{SS1} = 0 V)

Parameter	Symbol	Conditions	HS (high-speed main) Mode		Unit
			MIN.	MAX.	
SIp setup time (to SCKp↑) Note	t_{SIK1}	4.0 V ≤ EV_{DD0} ≤ 5.5 V, 2.7 V ≤ V_b ≤ 4.0 V, C_b = 30 pF, R_b = 1.4 kΩ	162		ns
		2.7 V ≤ EV_{DD0} < 4.0 V, 2.3 V ≤ V_b ≤ 2.7 V, C_b = 30 pF, R_b = 2.7 kΩ	354		ns
		2.4 V ≤ EV_{DD0} < 3.3 V, 1.6 V ≤ V_b ≤ 2.0 V, C_b = 30 pF, R_b = 5.5 kΩ	958		ns
SIp hold time (from SCKp↑) Note	t_{KSI1}	4.0 V ≤ EV_{DD0} ≤ 5.5 V, 2.7 V ≤ V_b ≤ 4.0 V, C_b = 30 pF, R_b = 1.4 kΩ	38		ns
		2.7 V ≤ EV_{DD0} < 4.0 V, 2.3 V ≤ V_b ≤ 2.7 V, C_b = 30 pF, R_b = 2.7 kΩ	38		ns
		2.4 V ≤ EV_{DD0} < 3.3 V, 1.6 V ≤ V_b ≤ 2.0 V, C_b = 30 pF, R_b = 2.7 kΩ	38		ns
Delay time from SCKp↓ to SOp output Note	t_{KSO1}	4.0 V ≤ EV_{DD0} ≤ 5.5 V, 2.7 V ≤ V_b ≤ 4.0 V, C_b = 30 pF, R_b = 1.4 kΩ		200	ns
		2.7 V ≤ EV_{DD0} < 4.0 V, 2.3 V ≤ V_b ≤ 2.7 V, C_b = 30 pF, R_b = 2.7 kΩ		390	ns
		2.4 V ≤ EV_{DD0} < 3.3 V, 1.6 V ≤ V_b ≤ 2.0 V, C_b = 30 pF, R_b = 5.5 kΩ		966	ns

Note When DAPmn = 0 and CKPmn = 0, or DAPmn = 1 and CKPmn = 1.

Caution Select the TTL input buffer for the SIp pin and the N-ch open drain output (V_{DD} tolerance (for the 20- to 52-pin products)/EV_{DD} tolerance (for the 64- to 100-pin products)) mode for the SOp pin and SCKp pin by using port input mode register g (PIMg) and port output mode register g (POMg). For V_{IH} and V_{IL}, see the DC characteristics with TTL input buffer selected.

(**Remarks** are listed on the page after the next page.)

(6) Communication at different potential (1.8 V, 2.5 V, 3 V) (CSI mode) (master mode, SCKp... internal clock output) (3/3)

(T_A = –40 to +105°C, 2.4 V ≤ EV_{DD0} = EV_{DD1} ≤ V_{DD} ≤ 5.5 V, V_{SS} = EV_{SS0} = EV_{SS1} = 0 V)

Parameter	Symbol	Conditions	HS (high-speed main) Mode		Unit
			MIN.	MAX.	
SIp setup time (to SCKp↓) Note	t_{SIK1}	4.0 V ≤ EV_{DD0} ≤ 5.5 V, 2.7 V ≤ V_b ≤ 4.0 V, C_b = 30 pF, R_b = 1.4 kΩ	88		ns
		2.7 V ≤ EV_{DD0} < 4.0 V, 2.3 V ≤ V_b ≤ 2.7 V, C_b = 30 pF, R_b = 2.7 kΩ	88		ns
		2.4 V ≤ EV_{DD0} < 3.3 V, 1.6 V ≤ V_b ≤ 2.0 V, C_b = 30 pF, R_b = 5.5 kΩ	220		ns
SIp hold time (from SCKp↓) Note	t_{KSI1}	4.0 V ≤ EV_{DD0} ≤ 5.5 V, 2.7 V ≤ V_b ≤ 4.0 V, C_b = 30 pF, R_b = 1.4 kΩ	38		ns
		2.7 V ≤ EV_{DD0} < 4.0 V, 2.3 V ≤ V_b ≤ 2.7 V, C_b = 30 pF, R_b = 2.7 kΩ	38		ns
		2.4 V ≤ EV_{DD0} < 3.3 V, 1.6 V ≤ V_b ≤ 2.0 V, C_b = 30 pF, R_b = 5.5 kΩ	38		ns
Delay time from SCKp↑ to SOp output Note	t_{KSO1}	4.0 V ≤ EV_{DD0} ≤ 5.5 V, 2.7 V ≤ V_b ≤ 4.0 V, C_b = 30 pF, R_b = 1.4 kΩ		50	ns
		2.7 V ≤ EV_{DD0} < 4.0 V, 2.3 V ≤ V_b ≤ 2.7 V, C_b = 30 pF, R_b = 2.7 kΩ		50	ns
		2.4 V ≤ EV_{DD0} < 3.3 V, 1.6 V ≤ V_b ≤ 2.0 V, C_b = 30 pF, R_b = 5.5 kΩ		50	ns

Note When DAPmn = 0 and CKPmn = 1, or DAPmn = 1 and CKPmn = 0.

Caution Select the TTL input buffer for the SIp pin and the N-ch open drain output (V_{DD} tolerance (for the 20- to 52-pin products)/EV_{DD} tolerance (for the 64- to 100-pin products)) mode for the SOp pin and SCKp pin by using port input mode register g (PIMg) and port output mode register g (POMg). For V_{IH} and V_{IL}, see the DC characteristics with TTL input buffer selected.

(**Remarks** are listed on the next page.)

CSI mode connection diagram (during communication at different potential)

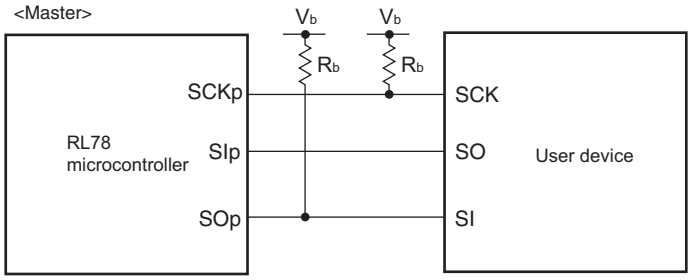

Remarks 1. R_b[Ω]:Communication line (SCKp, SOp) pull-up resistance, C_b[F]: Communication line (SCKp, SOp) load capacitance, V_b[V]: Communication line voltage

2. p: CSI number (p = 00, 01, 10, 20, 30, 31), m: Unit number , n: Channel number (mn = 00, 01, 02, 10, 12, 13), g: PIM and POM number (g = 0, 1, 4, 5, 8, 14)

3. f_{MCK}: Serial array unit operation clock frequency
(Operation clock to be set by the CKSmn bit of serial mode register mn (SMRmn).
m: Unit number, n: Channel number (mn = 00))

4. CSI01 of 48-, 52-, 64-pin products, and CSI11 and CSI21 cannot communicate at different potential. Use other CSI for communication at different potential.

CSI mode serial transfer timing (master mode) (during communication at different potential)
(When DAPmn = 0 and CKPmn = 0, or DAPmn = 1 and CKPmn = 1.)

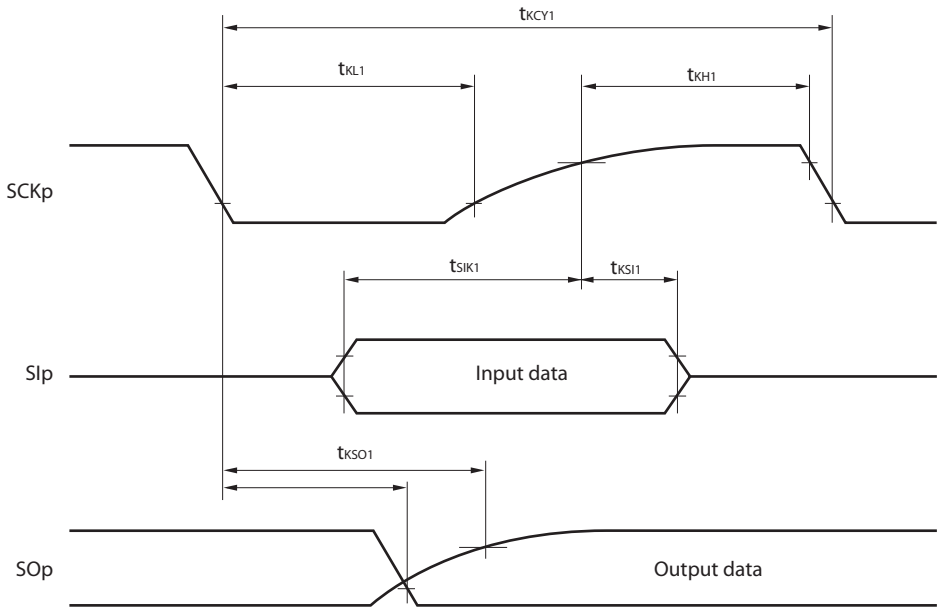

CSI mode serial transfer timing (master mode) (during communication at different potential)
(When DAPmn = 0 and CKPmn = 1, or DAPmn = 1 and CKPmn = 0.)

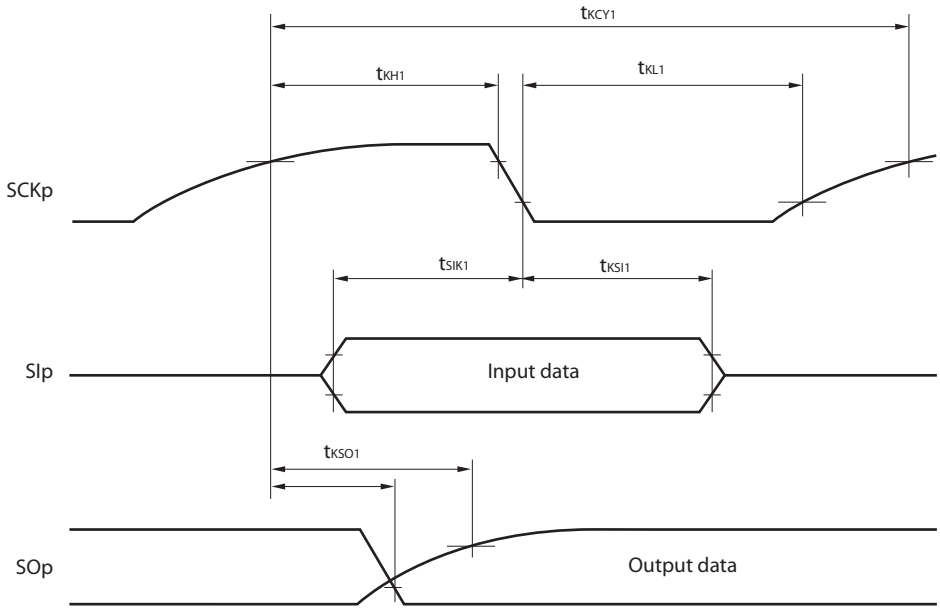

Remarks 1. p: CSI number (p = 00, 01, 10, 20, 30, 31), m: Unit number (m = 00, 01, 02, 10, 12, 13), n: Channel number (n = 0, 2), g: PIM and POM number (g = 0, 1, 4, 5, 8, 14)

2. CSI01 of 48-, 52-, 64-pin products, and CSI11 and CSI21 cannot communicate at different potential. Use other CSI for communication at different potential.

(7) Communication at different potential (1.8 V, 2.5 V, 3 V) (CSI mode) (slave mode, SCKp... external clock input)

(T_A = –40 to +105°C, 2.4 V ≤ EV_{DD0} = EV_{DD1} ≤ V_{DD} ≤ 5.5 V, V_{SS} = EV_{SS0} = EV_{SS1} = 0 V)

Parameter	Symbol	Conditions		HS (high-speed main) Mode		Unit
				MIN.	MAX.	
SCKp cycle time Note 1	t_{KCY2}	4.0 V ≤ EV_{DD0} ≤ 5.5 V, 2.7 V ≤ V_b ≤ 4.0 V	24 MHz < f_{MCK}	28/f_{MCK}		ns
			20 MHz < f_{MCK} ≤ 24 MHz	24/f_{MCK}		ns
			8 MHz < f_{MCK} ≤ 20 MHz	20/f_{MCK}		ns
			4 MHz < f_{MCK} ≤ 8 MHz	16/f_{MCK}		ns
			f_{MCK} ≤ 4 MHz	12/f_{MCK}		ns
		2.7 V ≤ EV_{DD0} < 4.0 V, 2.3 V ≤ V_b ≤ 2.7 V	24 MHz < f_{MCK}	40/f_{MCK}		ns
			20 MHz < f_{MCK} ≤ 24 MHz	32/f_{MCK}		ns
			16 MHz < f_{MCK} ≤ 20 MHz	28/f_{MCK}		ns
			8 MHz < f_{MCK} ≤ 16 MHz	24/f_{MCK}		ns
			4 MHz < f_{MCK} ≤ 8 MHz	16/f_{MCK}		ns
			f_{MCK} ≤ 4 MHz	12/f_{MCK}		ns
		2.4 V ≤ EV_{DD0} < 3.3 V, 1.6 V ≤ V_b ≤ 2.0 V	24 MHz < f_{MCK}	96/f_{MCK}		ns
			20 MHz < f_{MCK} ≤ 24 MHz	72/f_{MCK}		ns
			16 MHz < f_{MCK} ≤ 20 MHz	64/f_{MCK}		ns
			8 MHz < f_{MCK} ≤ 16 MHz	52/f_{MCK}		ns
			4 MHz < f_{MCK} ≤ 8 MHz	32/f_{MCK}		ns
			f_{MCK} ≤ 4 MHz	20/f_{MCK}		ns
SCKp high-/low-level width	t_{KH2}, t_{KL2}	4.0 V ≤ EV_{DD0} ≤ 5.5 V, 2.7 V ≤ V_b ≤ 4.0 V		t_{KCY2}/2 – 24		ns
		2.7 V ≤ EV_{DD0} < 4.0 V, 2.3 V ≤ V_b ≤ 2.7 V		t_{KCY2}/2 – 36		ns
		2.4 V ≤ EV_{DD0} < 3.3 V, 1.6 V ≤ V_b ≤ 2.0 V Note 2		t_{KCY2}/2 – 100		ns
SIp setup time (to SCKp↑) Note2	t_{SIK2}	4.0 V ≤ EV_{DD0} ≤ 5.5 V, 2.7 V ≤ V_b ≤ 4.0 V		1/f_{MCK} + 40		ns
		2.7 V ≤ EV_{DD0} < 4.0 V, 2.3 V ≤ V_b ≤ 2.7 V		1/f_{MCK} + 40		ns
		2.4 V ≤ EV_{DD0} < 3.3 V, 1.6 V ≤ V_b ≤ 2.0 V		1/f_{MCK} + 60		ns
SIp hold time (from SCKp↑) Note 3	t_{KSI2}			1/f_{MCK} + 62		ns
Delay time from SCKp↓ to SOp output Note 4	t_{KSO2}	4.0 V ≤ EV_{DD0} ≤ 5.5 V, 2.7 V ≤ V_b ≤ 4.0 V, C_b = 30 pF, R_b = 1.4 kΩ			2/f_{MCK} + 240	ns
		2.7 V ≤ EV_{DD0} < 4.0 V, 2.3 V ≤ V_b ≤ 2.7 V, C_b = 30 pF, R_b = 2.7 kΩ			2/f_{MCK} + 428	ns
		2.4 V ≤ EV_{DD0} < 3.3 V, 1.6 V ≤ V_b ≤ 2.0 V C_b = 30 pF, R_b = 5.5 kΩ			2/f_{MCK} + 1146	ns

(**Notes**, **Caution** and **Remarks** are listed on the next page.)

Notes 1. Transfer rate in the SNOOZE mode : MAX. 1 Mbps

2. When DAPmn = 0 and CKPmn = 0, or DAPmn = 1 and CKPmn = 1. The SIp setup time becomes "to SCKp↓" when DAPmn = 0 and CKPmn = 1, or DAPmn = 1 and CKPmn = 0.

3. When DAPmn = 0 and CKPmn = 0, or DAPmn = 1 and CKPmn = 1. The SIp hold time becomes "from SCKp↓" when DAPmn = 0 and CKPmn = 1, or DAPmn = 1 and CKPmn = 0.

4. When DAPmn = 0 and CKPmn = 0, or DAPmn = 1 and CKPmn = 1. The delay time to SOp output becomes "from SCKp↑" when DAPmn = 0 and CKPmn = 1, or DAPmn = 1 and CKPmn = 0.

Caution Select the TTL input buffer for the SIp pin and SCKp pin and the N-ch open drain output (V_{DD} tolerance (for the 20- to 52-pin products)/EV_{DD} tolerance (for the 64- to 128-pin products)) mode for the SOp pin by using port input mode register g (PIMg) and port output mode register g (POMg). For V_{IH} and V_{IL}, see the DC characteristics with TTL input buffer selected.

CSI mode connection diagram (during communication at different potential)

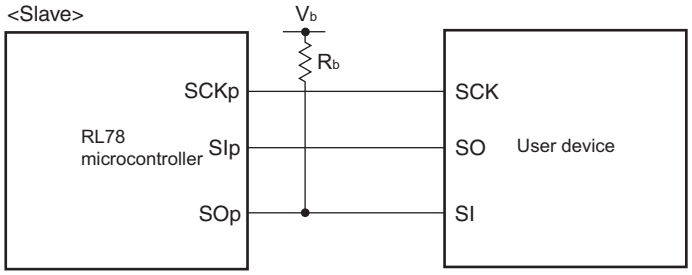

Remarks 1. R_b[Ω]:Communication line (SOp) pull-up resistance, C_b[F]: Communication line (SOp) load capacitance, V_b[V]: Communication line voltage

2. p: CSI number (p = 00, 01, 10, 20, 30, 31), m: Unit number (m = 0, 1), n: Channel number (n = 00, 01, 02,
10, 12, 13), g: PIM and POM number (g = 0, 1, 4, 5, 8, 14)

3. f_{MCK}: Serial array unit operation clock frequency
(Operation clock to be set by the CKSmn bit of serial mode register mn (SMRmn).
m: Unit number, n: Channel number (mn = 00, 01, 02, 10, 12, 13))

4. CSI01 of 48-, 52-, 64-pin products, and CSI11 and CSI21 cannot communicate at different potential. Use other CSI for communication at different potential.

CSI mode serial transfer timing (slave mode) (during communication at different potential)
(When DAPmn = 0 and CKPmn = 0, or DAPmn = 1 and CKPmn = 1.)

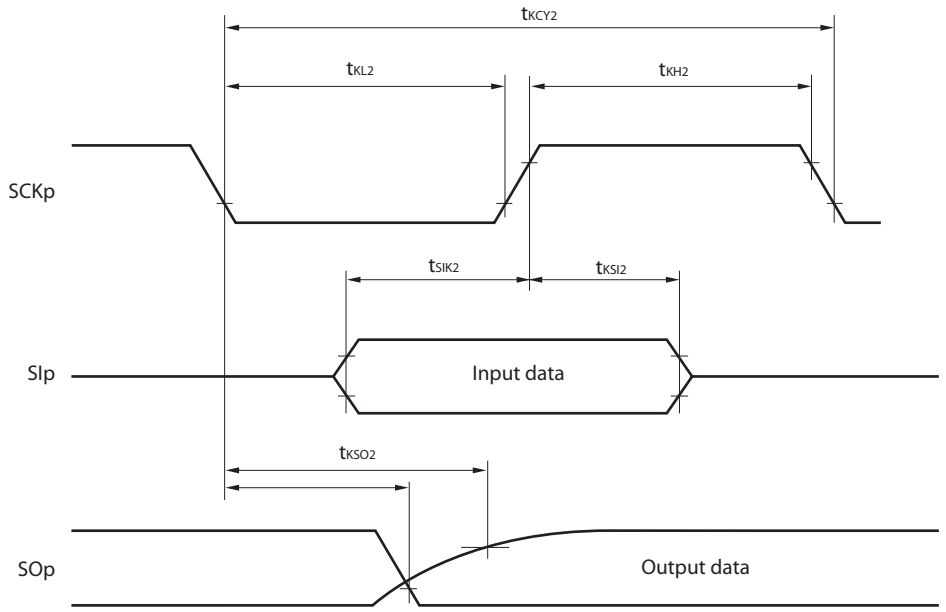

CSI mode serial transfer timing (slave mode) (during communication at different potential)
(When DAPmn = 0 and CKPmn = 1, or DAPmn = 1 and CKPmn = 0.)

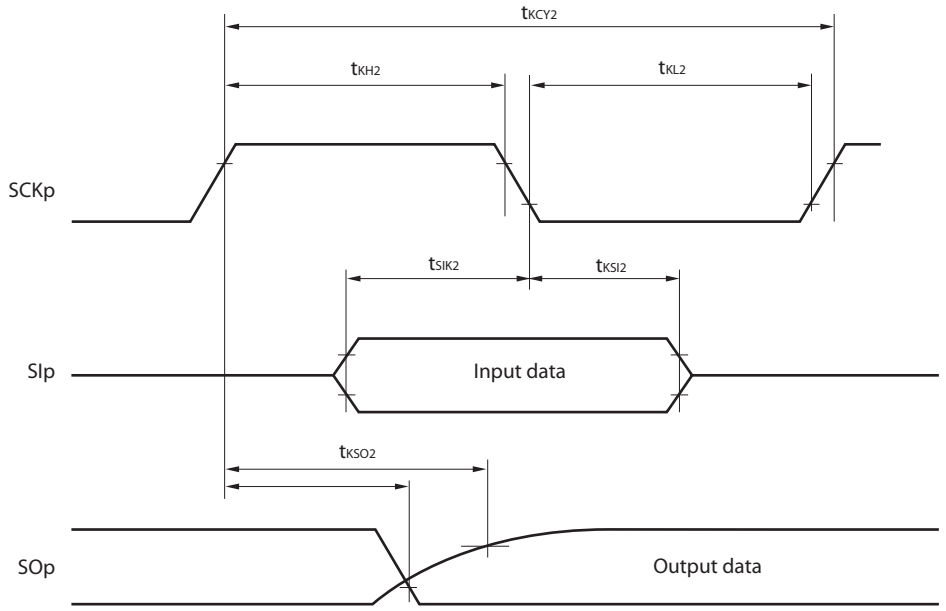

Remarks 1. p: CSI number (p = 00, 01, 10, 20, 30, 31), m: Unit number,
n: Channel number (mn = 00, 01, 02, 10, 12. 13), g: PIM and POM number (g = 0, 1, 4, 5, 8, 14)

2. CSI01 of 48-, 52-, 64-pin products, and CSI11 and CSI21 cannot communicate at different potential. Use other CSI for communication at different potential.

(8) Communication at different potential (1.8 V, 2.5 V, 3 V) (simplified I^2C mode) (1/2)

(T_A = –40 to +105°C, 2.4 V ≤ EV_{DD0} = EV_{DD1} ≤ V_{DD} ≤ 5.5 V, V_{SS} = EV_{SS0} = EV_{SS1} = 0 V)

Parameter	Symbol	Conditions	HS (high-speed main) Mode		Unit
			MIN.	MAX.	
SCLr clock frequency	f_{SCL}	4.0 V ≤ EV_{DD0} ≤ 5.5 V, 2.7 V ≤ V_b ≤ 4.0 V, C_b = 50 pF, R_b = 2.7 kΩ		400 Note 1	kHz
		2.7 V ≤ EV_{DD0} < 4.0 V, 2.3 V ≤ V_b ≤ 2.7 V, C_b = 50 pF, R_b = 2.7 kΩ		400 Note 1	kHz
		4.0 V ≤ EV_{DD0} ≤ 5.5 V, 2.7 V ≤ V_b ≤ 4.0 V, C_b = 100 pF, R_b = 2.8 kΩ		100 Note 1	kHz
		2.7 V ≤ EV_{DD0} < 4.0 V, 2.3 V ≤ V_b ≤ 2.7 V, C_b = 100 pF, R_b = 2.7 kΩ		100 Note 1	kHz
		2.4 V ≤ EV_{DD0} < 3.3 V, 1.6 V ≤ V_b ≤ 2.0 V, C_b = 100 pF, R_b = 5.5 kΩ		100 Note 1	kHz
Hold time when SCLr = “L”	t_{LOW}	4.0 V ≤ EV_{DD0} ≤ 5.5 V, 2.7 V ≤ V_b ≤ 4.0 V, C_b = 50 pF, R_b = 2.7 kΩ	1200		ns
		2.7 V ≤ EV_{DD0} < 4.0 V, 2.3 V ≤ V_b ≤ 2.7 V, C_b = 50 pF, R_b = 2.7 kΩ	1200		ns
		4.0 V ≤ EV_{DD0} ≤ 5.5 V, 2.7 V ≤ V_b ≤ 4.0 V, C_b = 100 pF, R_b = 2.8 kΩ	4600		ns
		2.7 V ≤ EV_{DD0} < 4.0 V, 2.3 V ≤ V_b ≤ 2.7 V, C_b = 100 pF, R_b = 2.7 kΩ	4600		ns
		2.4 V ≤ EV_{DD0} < 3.3 V, 1.6 V ≤ V_b ≤ 2.0 V, C_b = 100 pF, R_b = 5.5 kΩ	4650		ns
Hold time when SCLr = “H”	t_{HIGH}	4.0 V ≤ EV_{DD0} ≤ 5.5 V, 2.7 V ≤ V_b ≤ 4.0 V, C_b = 50 pF, R_b = 2.7 kΩ	620		ns
		2.7 V ≤ EV_{DD0} < 4.0 V, 2.3 V ≤ V_b ≤ 2.7 V, C_b = 50 pF, R_b = 2.7 kΩ	500		ns
		4.0 V ≤ EV_{DD0} ≤ 5.5 V, 2.7 V ≤ V_b ≤ 4.0 V, C_b = 100 pF, R_b = 2.8 kΩ	2700		ns
		2.7 V ≤ EV_{DD0} < 4.0 V, 2.3 V ≤ V_b ≤ 2.7 V, C_b = 100 pF, R_b = 2.7 kΩ	2400		ns
		2.4 V ≤ EV_{DD0} < 3.3 V, 1.6 V ≤ V_b ≤ 2.0 V, C_b = 100 pF, R_b = 5.5 kΩ	1830		ns

(**Notes** and **Caution** are listed on the next page, and **Remarks** are listed on the page after the next page.)

(8) Communication at different potential (1.8 V, 2.5 V, 3 V) (simplified I^2C mode) (2/2)

(T_A = –40 to +105°C, 2.4 V ≤ EV_{DD0} = EV_{DD1} ≤ V_{DD} ≤ 5.5 V, V_{SS} = EV_{SS0} = EV_{SS1} = 0 V)

Parameter	Symbol	Conditions	HS (high-speed main) Mode		Unit
			MIN.	MAX.	
Data setup time (reception)	$t_{SU:DAT}$	4.0 V ≤ EV_{DD0} ≤ 5.5 V, 2.7 V ≤ V_b ≤ 4.0 V, C_b = 50 pF, R_b = 2.7 kΩ	1/f_{MCK} + 340 Note 2		ns
		2.7 V ≤ EV_{DD0} < 4.0 V, 2.3 V ≤ V_b ≤ 2.7 V, C_b = 50 pF, R_b = 2.7 kΩ	1/f_{MCK} + 340 Note 2		ns
		4.0 V ≤ EV_{DD0} ≤ 5.5 V, 2.7 V ≤ V_b ≤ 4.0 V, C_b = 100 pF, R_b = 2.8 kΩ	1/f_{MCK} + 760 Note 2		ns
		2.7 V ≤ EV_{DD0} < 4.0 V, 2.3 V ≤ V_b ≤ 2.7 V, C_b = 100 pF, R_b = 2.7 kΩ	1/f_{MCK} + 760 Note 2		ns
		2.4 V ≤ EV_{DD0} < 3.3 V, 1.6 V ≤ V_b ≤ 2.0 V, C_b = 100 pF, R_b = 5.5 kΩ	1/f_{MCK} + 570 Note 2		ns
Data hold time (transmission)	$t_{HD:DAT}$	4.0 V ≤ EV_{DD0} ≤ 5.5 V, 2.7 V ≤ V_b ≤ 4.0 V, C_b = 50 pF, R_b = 2.7 kΩ	0	770	ns
		2.7 V ≤ EV_{DD0} < 4.0 V, 2.3 V ≤ V_b ≤ 2.7 V, C_b = 50 pF, R_b = 2.7 kΩ	0	770	ns
		4.0 V ≤ EV_{DD0} ≤ 5.5 V, 2.7 V ≤ V_b ≤ 4.0 V, C_b = 100 pF, R_b = 2.8 kΩ	0	1420	ns
		2.7 V ≤ EV_{DD0} < 4.0 V, 2.3 V ≤ V_b ≤ 2.7 V, C_b = 100 pF, R_b = 2.7 kΩ	0	1420	ns
		2.4 V ≤ EV_{DD0} < 3.3 V, 1.6 V ≤ V_b ≤ 2.0 V, C_b = 100 pF, R_b = 5.5 kΩ	0	1215	ns

Notes 1. The value must also be equal to or less than f_{MCK}/4.

2. Set the f_{MCK} value to keep the hold time of SCLr = "L" and SCLr = "H".

Caution Select the TTL input buffer and the N-ch open drain output (V_{DD} tolerance (for the 20- to 52-pin products)/EV_{DD} tolerance (for the 64- to 100-pin products)) mode for the SDAr pin and the N-ch open drain output (V_{DD} tolerance (for the 20- to 52-pin products)/EV_{DD} tolerance (for the 64- to 100-pin products)) mode for the SCLr pin by using port input mode register g (PIMg) and port output mode register g (POMg). For V_{IH} and V_{IL}, see the DC characteristics with TTL input buffer selected.

(**Remarks** are listed on the next page.)

Simplified I^2C mode connection diagram (during communication at different potential)

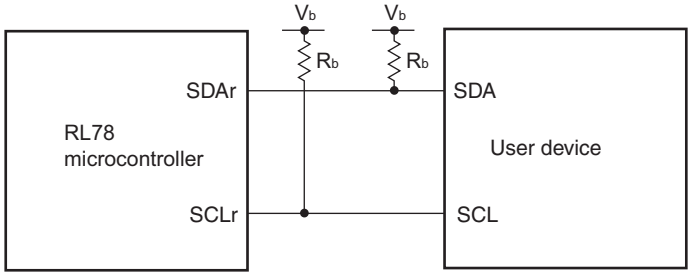

Simplified I^2C mode serial transfer timing (during communication at different potential)

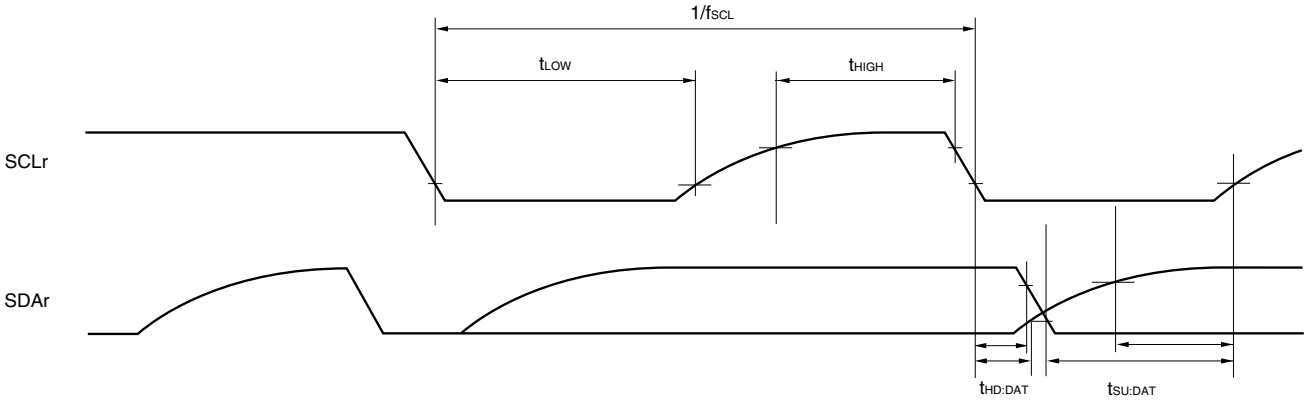

Caution Select the TTL input buffer and the N-ch open drain output (V_{DD} tolerance (for the 20- to 52-pin products)/EV_{DD} tolerance (for the 64- to 100-pin products)) mode for the SDAr pin and the N-ch open drain output (V_{DD} tolerance (for the 20- to 52-pin products)/EV_{DD} tolerance (for the 64- to 100-pin products)) mode for the SCLr pin by using port input mode register g (PIMg) and port output mode register g (POMg). For V_{IH} and V_{IL}, see the DC characteristics with TTL input buffer selected.

Remarks 1. R_b[Ω]:Communication line (SDAr, SCLr) pull-up resistance, C_b[F]: Communication line (SDAr, SCLr) load capacitance, V_b[V]: Communication line voltage

2. r: IIC number (r = 00, 01, 10, 20, 30, 31), g: PIM, POM number (g = 0, 1, 4, 5, 8, 14)

3. f_{MCK}: Serial array unit operation clock frequency

(Operation clock to be set by the CKSmn bit of serial mode register mn (SMRmn). m: Unit number, n: Channel number (mn = 00, 01, 02, 10, 12, 13)

3.5.2 Serial interface IICA

(T_A = –40 to +105°C, 2.4 V ≤ EV_{DD0} = EV_{DD1} ≤ V_{DD} ≤ 5.5 V, V_{SS} = EV_{SS0} = EV_{SS1} = 0 V)

Parameter	Symbol	Conditions	HS (high-speed main) Mode				Unit
			Standard Mode		Fast Mode		
			MIN.	MAX.	MIN.	MAX.	
SCLA0 clock frequency	f_{SCL}	Fast mode: f_{CLK} ≥ 3.5 MHz	–	–	0	400	kHz
		Standard mode: f_{CLK} ≥ 1 MHz	0	100	–	–	kHz
Setup time of restart condition	$t_{SU:STA}$		4.7		0.6		μs
Hold time[Note 1]	$t_{HD:STA}$		4.0		0.6		μs
Hold time when SCLA0 = “L”	t_{LOW}		4.7		1.3		μs
Hold time when SCLA0 = “H”	t_{HIGH}		4.0		0.6		μs
Data setup time (reception)	$t_{SU:DAT}$		250		100		ns
Data hold time (transmission)[Note 2]	$t_{HD:DAT}$		0	3.45	0	0.9	μs
Setup time of stop condition	$t_{SU:STO}$		4.0		0.6		μs
Bus-free time	t_{BUF}		4.7		1.3		μs

Notes 1. The first clock pulse is generated after this period when the start/restart condition is detected.

<R> **2.** The maximum value (MAX.) of $t_{HD:DAT}$ is during normal transfer and a wait state is inserted in the ACK (acknowledge) timing.

Caution The values in the above table are applied even when bit 2 (PIOR2) in the peripheral I/O redirection register (PIOR) is 1. At this time, the pin characteristics (I_{OH1}, I_{OL1}, V_{OH1}, V_{OL1}) must satisfy the values in the redirect destination.

Remark The maximum value of Cb (communication line capacitance) and the value of Rb (communication line pull-up resistor) at that time in each mode are as follows.

Standard mode: C_b = 400 pF, R_b = 2.7 kΩ
Fast mode: C_b = 320 pF, R_b = 1.1 kΩ

IICA serial transfer timing

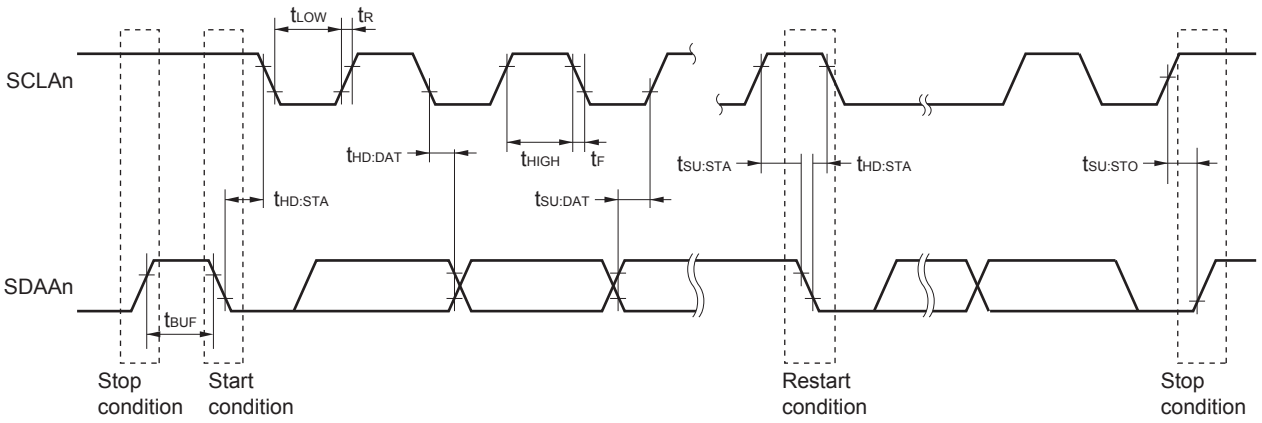

Remark n = 0, 1

3.6 Analog Characteristics

3.6.1 A/D converter characteristics

Classification of A/D converter characteristics

Input channel	Reference Voltage		
	Reference voltage (+) = AV_{REFP} Reference voltage (–) = AV_{REFM}	Reference voltage (+) = V_{DD} Reference voltage (–) = V_{SS}	Reference voltage (+) = V_{BGR} Reference voltage (–) = AV_{REFM}
ANI0 to ANI14	Refer to **3.6.1 (1)**.	Refer to **3.6.1 (3)**.	Refer to **3.6.1 (4)**.
ANI16 to ANI26	Refer to **3.6.1 (2)**.		
Internal reference voltage Temperature sensor output voltage	Refer to **3.6.1 (1)**.		–

(1) When reference voltage (+) = AV_{REFP}/ANI0 (ADREFP1 = 0, ADREFP0 = 1), reference voltage (–) = AV_{REFM}/ANI1 (ADREFM = 1), target pin : ANI2 to ANI14, internal reference voltage, and temperature sensor output voltage

(T_A = –40 to +105°C, 2.4 V ≤ AV_{REFP} ≤ V_{DD} ≤ 5.5 V, V_{SS} = 0 V, Reference voltage (+) = AV_{REFP}, Reference voltage (–) = AV_{REFM} = 0 V)

Parameter	Symbol	Conditions		MIN.	TYP.	MAX.	Unit
Resolution	RES			8		10	bit
Overall error[Note 1]	AINL	10-bit resolution AV_{REFP} = V_{DD}[Note 3]	2.4 V ≤ AV_{REFP} ≤ 5.5 V		1.2	±3.5	LSB
Conversion time	t_{CONV}	10-bit resolution Target pin: ANI2 to ANI14	3.6 V ≤ V_{DD} ≤ 5.5 V	2.125		39	μs
			2.7 V ≤ V_{DD} ≤ 5.5 V	3.1875		39	μs
			2.4 V ≤ V_{DD} ≤ 5.5 V	17		39	μs
		10-bit resolution Target pin: Internal reference voltage, and temperature sensor output voltage (HS (high-speed main) mode)	3.6 V ≤ V_{DD} ≤ 5.5 V	2.375		39	μs
			2.7 V ≤ V_{DD} ≤ 5.5 V	3.5625		39	μs
			2.4 V ≤ V_{DD} ≤ 5.5 V	17		39	μs
Zero-scale error[Notes 1, 2]	E_{ZS}	10-bit resolution AV_{REFP} = V_{DD}[Note 3]	2.4 V ≤ AV_{REFP} ≤ 5.5 V			±0.25	%FSR
Full-scale error[Notes 1, 2]	E_{FS}	10-bit resolution AV_{REFP} = V_{DD}[Note 3]	2.4 V ≤ AV_{REFP} ≤ 5.5 V			±0.25	%FSR
Integral linearity error[Note 1]	ILE	10-bit resolution AV_{REFP} = V_{DD}[Note 3]	2.4 V ≤ AV_{REFP} ≤ 5.5 V			±2.5	LSB
Differential linearity error[Note 1]	DLE	10-bit resolution AV_{REFP} = V_{DD}[Note 3]	2.4 V ≤ AV_{REFP} ≤ 5.5 V			±1.5	LSB
Analog input voltage	V_{AIN}	ANI2 to ANI14		0		AV_{REFP}	V
		Internal reference voltage output (2.4 V ≤ V_{DD} ≤ 5.5 V, HS (high-speed main) mode)		V_{BGR}[Note 4]			V
		Temperature sensor output voltage (2.4 V ≤ V_{DD} ≤ 5.5 V, HS (high-speed main) mode)		V_{TMPS25}[Note 4]			V

(**Notes** are listed on the next page.)

Notes 1. Excludes quantization error (±1/2 LSB).

2. This value is indicated as a ratio (%FSR) to the full-scale value.

3. When $AV_{REFP} < V_{DD}$, the MAX. values are as follows.
Overall error: Add ±1.0 LSB to the MAX. value when $AV_{REFP} = V_{DD}$.
Zero-scale error/Full-scale error: Add ±0.05%FSR to the MAX. value when $AV_{REFP} = V_{DD}$.
Integral linearity error/ Differential linearity error: Add ±0.5 LSB to the MAX. value when $AV_{REFP} = V_{DD}$.

4. Refer to **3.6.2 Temperature sensor/internal reference voltage characteristics**.

(2) When reference voltage (+) = AV_{REFP}/ANI0 (ADREFP1 = 0, ADREFP0 = 1), reference voltage (–) = AV_{REFM}/ANI1 (ADREFM = 1), target pin : ANI16 to ANI26

(T_A = –40 to +105°C, 2.4 V ≤ EV_{DD0} = EV_{DD1} ≤ V_{DD} ≤ 5.5 V, 2.4 V ≤ AV_{REFP} ≤ V_{DD} ≤ 5.5 V, V_{SS} = EV_{SS0} = EV_{SS1} = 0 V, Reference voltage (+) = AV_{REFP}, Reference voltage (–) = AV_{REFM} = 0 V)

Parameter	Symbol	Conditions		MIN.	TYP.	MAX.	Unit
Resolution	RES			8		10	bit
Overall error[Note 1]	AINL	10-bit resolution EV_{DD0} ≤ AV_{REFP} = V_{DD} [Notes 3, 4]	2.4 V ≤ AV_{REFP} ≤ 5.5 V		1.2	±5.0	LSB
Conversion time	t_{CONV}	10-bit resolution Target pin : ANI16 to ANI26	3.6 V ≤ V_{DD} ≤ 5.5 V	2.125		39	μs
			2.7 V ≤ V_{DD} ≤ 5.5 V	3.1875		39	μs
			2.4 V ≤ V_{DD} ≤ 5.5 V	17		39	μs
Zero-scale error[Notes 1, 2]	E_{ZS}	10-bit resolution EV_{DD0} ≤ AV_{REFP} = V_{DD} [Notes 3, 4]	2.4 V ≤ AV_{REFP} ≤ 5.5 V			±0.35	%FSR
Full-scale error[Notes 1, 2]	E_{FS}	10-bit resolution EV_{DD0} ≤ AV_{REFP} = V_{DD} [Notes 3, 4]	2.4 V ≤ AV_{REFP} ≤ 5.5 V			±0.35	%FSR
Integral linearity error[Note 1]	ILE	10-bit resolution EV_{DD0} ≤ AV_{REFP} = V_{DD} [Notes 3, 4]	2.4 V ≤ AV_{REFP} ≤ 5.5 V			±3.5	LSB
Differential linearity error [Note 1]	DLE	10-bit resolution EV_{DD0} ≤ AV_{REFP} = V_{DD} [Notes 3, 4]	2.4 V ≤ AV_{REFP} ≤ 5.5 V			±2.0	LSB
Analog input voltage	V_{AIN}	ANI16 to ANI26		0		AV_{REFP} and EV_{DD0}	V

Notes 1. Excludes quantization error (±1/2 LSB).

2. This value is indicated as a ratio (%FSR) to the full-scale value.

3. When AV_{REFP} < V_{DD}, the MAX. values are as follows.
Overall error: Add ±1.0 LSB to the MAX. value when AV_{REFP} = V_{DD}.
Zero-scale error/Full-scale error: Add ±0.05%FSR to the MAX. value when AV_{REFP} = V_{DD}.
Integral linearity error/ Differential linearity error: Add ±0.5 LSB to the MAX. value when AV_{REFP} = V_{DD}.

4. When AV_{REFP} < EV_{DD0} ≤ V_{DD}, the MAX. values are as follows.
Overall error: Add ±4.0 LSB to the MAX. value when AV_{REFP} = V_{DD}.
Zero-scale error/Full-scale error: Add ±0.20%FSR to the MAX. value when AV_{REFP} = V_{DD}.
Integral linearity error/ Differential linearity error: Add ±2.0 LSB to the MAX. value when AV_{REFP} = V_{DD}.

(3) When reference voltage (+) = V_{DD} (ADREFP1 = 0, ADREFP0 = 0), reference voltage (–) = V_{SS} (ADREFM = 0), target pin : ANI0 to ANI14, ANI16 to ANI26, internal reference voltage, and temperature sensor output voltage

(T_A = –40 to +105°C, 2.4 V ≤ EV_{DD0} = EV_{DD1} ≤ V_{DD} ≤ 5.5 V, V_{SS} = EV_{SS0} = EV_{SS1} = 0 V, Reference voltage (+) = V_{DD}, Reference voltage (–) = V_{SS})

Parameter	Symbol	Conditions		MIN.	TYP.	MAX.	Unit
Resolution	RES			8		10	bit
Overall error[Note 1]	AINL	10-bit resolution	2.4 V ≤ V_{DD} ≤ 5.5 V		1.2	±7.0	LSB
Conversion time	t_{CONV}	10-bit resolution Target pin: ANI0 to ANI14, ANI16 to ANI26	3.6 V ≤ V_{DD} ≤ 5.5 V	2.125		39	μs
			2.7 V ≤ V_{DD} ≤ 5.5 V	3.1875		39	μs
			2.4 V ≤ V_{DD} ≤ 5.5 V	17		39	μs
		10-bit resolution Target pin: Internal reference voltage, and temperature sensor output voltage (HS (high-speed main) mode)	3.6 V ≤ V_{DD} ≤ 5.5 V	2.375		39	μs
			2.7 V ≤ V_{DD} ≤ 5.5 V	3.5625		39	μs
			2.4 V ≤ V_{DD} ≤ 5.5 V	17		39	μs
Zero-scale error[Notes 1, 2]	E_{ZS}	10-bit resolution	2.4 V ≤ V_{DD} ≤ 5.5 V			±0.60	%FSR
Full-scale error[Notes 1, 2]	E_{FS}	10-bit resolution	2.4 V ≤ V_{DD} ≤ 5.5 V			±0.60	%FSR
Integral linearity error[Note 1]	ILE	10-bit resolution	2.4 V ≤ V_{DD} ≤ 5.5 V			±4.0	LSB
Differential linearity error[Note 1]	DLE	10-bit resolution	2.4 V ≤ V_{DD} ≤ 5.5 V			±2.0	LSB
Analog input voltage	V_{AIN}	ANI0 to ANI14		0		V_{DD}	V
		ANI16 to ANI26		0		EV_{DD0}	V
		Internal reference voltage output (2.4 V ≤ V_{DD} ≤ 5.5 V, HS (high-speed main) mode)		V_{BGR}[Note 3]			V
		Temperature sensor output voltage (2.4 V ≤ V_{DD} ≤ 5.5 V, HS (high-speed main) mode)		V_{TMPS25}[Note 3]			V

Notes 1. Excludes quantization error (±1/2 LSB).

2. This value is indicated as a ratio (%FSR) to the full-scale value.

3. Refer to **3.6.2 Temperature sensor/internal reference voltage characteristics**.

(4) When reference voltage (+) = Internal reference voltage (ADREFP1 = 1, ADREFP0 = 0), reference voltage (–) = AV_{REFM}/ANI1 (ADREFM = 1), target pin : ANI0, ANI2 to ANI14, ANI16 to ANI26

(T_A = –40 to +105°C, 2.4 V ≤ EV_{DD0} = EV_{DD1} ≤ V_{DD} ≤ 5.5 V, V_{SS} = EV_{SS0} = EV_{SS1} = 0 V, Reference voltage (+) = V_{BGR} Note 3, Reference voltage (–) = AV_{REFM} Note 4 = 0 V, HS (high-speed main) mode)

Parameter	Symbol	Conditions		MIN.	TYP.	MAX.	Unit
Resolution	RES				8		bit
Conversion time	t_{CONV}	8-bit resolution	2.4 V ≤ V_{DD} ≤ 5.5 V	17		39	μs
Zero-scale error Notes 1, 2	E_{ZS}	8-bit resolution	2.4 V ≤ V_{DD} ≤ 5.5 V			±0.60	%FSR
Integral linearity error Note 1	ILE	8-bit resolution	2.4 V ≤ V_{DD} ≤ 5.5 V			±2.0	LSB
Differential linearity error Note 1	DLE	8-bit resolution	2.4 V ≤ V_{DD} ≤ 5.5 V			±1.0	LSB
Analog input voltage	V_{AIN}			0		V_{BGR} Note 3	V

Notes 1. Excludes quantization error (±1/2 LSB).

2. This value is indicated as a ratio (%FSR) to the full-scale value.

3. Refer to **3.6.2 Temperature sensor/internal reference voltage characteristics**.

4. When reference voltage (–) = V_{SS}, the MAX. values are as follows.
Zero-scale error: Add ±0.35%FSR to the MAX. value when reference voltage (–) = AV_{REFM}.
Integral linearity error: Add ±0.5 LSB to the MAX. value when reference voltage (–) = AV_{REFM}.
Differential linearity error: Add ±0.2 LSB to the MAX. value when reference voltage (–) = AV_{REFM}.

3.6.2 Temperature sensor/internal reference voltage characteristics

(T_A = –40 to +105°C, 2.4 V ≤ V_{DD} ≤ 5.5 V, V_{SS} = 0 V, HS (high-speed main) mode)

Parameter	Symbol	Conditions	MIN.	TYP.	MAX.	Unit
Temperature sensor output voltage	V_{TMPS25}	Setting ADS register = 80H, T_A = +25°C		1.05		V
Internal reference voltage	V_{BGR}	Setting ADS register = 81H	1.38	1.45	1.5	V
Temperature coefficient	F_{VTMPS}	Temperature sensor that depends on the temperature		–3.6		mV/°C
Operation stabilization wait time	t_{AMP}		5			μs

3.6.3 POR circuit characteristics

(T_A = –40 to +105°C, V_{SS} = 0 V)

Parameter	Symbol	Conditions	MIN.	TYP.	MAX.	Unit
Detection voltage	V_{POR}	Power supply rise time	1.45	1.51	1.57	V
	V_{PDR}	Power supply fall time	1.44	1.50	1.56	V
Minimum pulse width	T_{PW}		300			μs

Note Minimum time required for a POR reset when V_{DD} exceeds below V_{PDR}. This is also the minimum time required for a POR reset from when V_{DD} exceeds below 0.7 V to when V_{DD} exceeds V_{POR} while STOP mode is entered or the main system clock is stopped through setting bit 0 (HIOSTOP) and bit 7 (MSTOP) in the clock operation status control register (CSC).

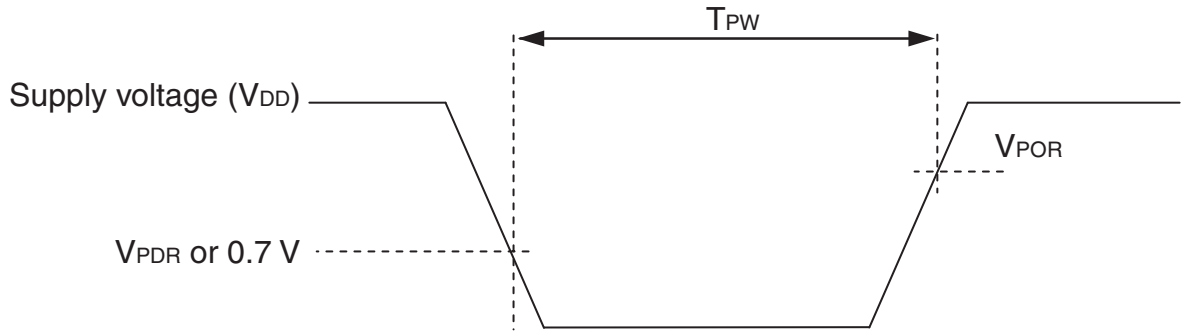

3.6.4 LVD circuit characteristics

LVD Detection Voltage of Reset Mode and Interrupt Mode

(T_A = –40 to +105°C, $V_{PDR} \le V_{DD} \le 5.5$ V, V_{SS} = 0 V)

Parameter		Symbol	Conditions	MIN.	TYP.	MAX.	Unit
Detection voltage	Supply voltage level	V_{LVD0}	Power supply rise time	3.90	4.06	4.22	V
			Power supply fall time	3.83	3.98	4.13	V
		V_{LVD1}	Power supply rise time	3.60	3.75	3.90	V
			Power supply fall time	3.53	3.67	3.81	V
		V_{LVD2}	Power supply rise time	3.01	3.13	3.25	V
			Power supply fall time	2.94	3.06	3.18	V
		V_{LVD3}	Power supply rise time	2.90	3.02	3.14	V
			Power supply fall time	2.85	2.96	3.07	V
		V_{LVD4}	Power supply rise time	2.81	2.92	3.03	V
			Power supply fall time	2.75	2.86	2.97	V
		V_{LVD5}	Power supply rise time	2.70	2.81	2.92	V
			Power supply fall time	2.64	2.75	2.86	V
		V_{LVD6}	Power supply rise time	2.61	2.71	2.81	V
			Power supply fall time	2.55	2.65	2.75	V
		V_{LVD7}	Power supply rise time	2.51	2.61	2.71	V
			Power supply fall time	2.45	2.55	2.65	V
Minimum pulse width		t_{LW}		300			μs
Detection delay time						300	μs

LVD Detection Voltage of Interrupt & Reset Mode

(T_A = –40 to +105°C, $V_{PDR} \le V_{DD} \le 5.5$ V, V_{SS} = 0 V)

Parameter	Symbol	Conditions			MIN.	TYP.	MAX.	Unit
Interrupt and reset mode	V_{LVDD0}	V_{POC2}, V_{POC1}, V_{POC0} = 0, 1, 1, falling reset voltage			2.64	2.75	2.86	V
	V_{LVDD1}		LVIS1, LVIS0 = 1, 0	Rising release reset voltage	2.81	2.92	3.03	V
				Falling interrupt voltage	2.75	2.86	2.97	V
	V_{LVDD2}		LVIS1, LVIS0 = 0, 1	Rising release reset voltage	2.90	3.02	3.14	V
				Falling interrupt voltage	2.85	2.96	3.07	V
	V_{LVDD3}		LVIS1, LVIS0 = 0, 0	Rising release reset voltage	3.90	4.06	4.22	V
				Falling interrupt voltage	3.83	3.98	4.13	V

3.6.5 Power supply voltage rising slope characteristics

(T_A = –40 to +105°C, V_{SS} = 0 V)

Parameter	Symbol	Conditions	MIN.	TYP.	MAX.	Unit
Power supply voltage rising slope	S_{VDD}				54	V/ms

Caution Make sure to keep the internal reset state by the LVD circuit or an external reset until V_{DD} reaches the operating voltage range shown in 3.4 AC Characteristics.

3.7 RAM Data Retention Characteristics

(T_A = –40 to +105°C, V_{SS} = 0 V)

Parameter	Symbol	Conditions	MIN.	TYP.	MAX.	Unit
Data retention supply voltage	V_{DDDR}		1.44[Note]		5.5	V

Note This depends on the POR detection voltage. For a falling voltage, data in RAM are retained until the voltage reaches the level that triggers a POR reset but not once it reaches the level at which a POR reset is generated.

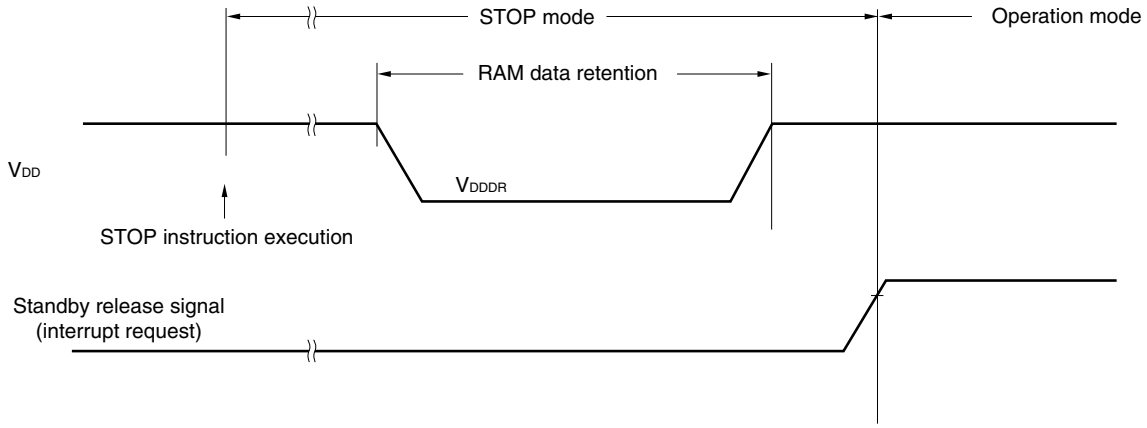

3.8 Flash Memory Programming Characteristics

(T_A = –40 to +105°C, 2.4 V ≤ V_{DD} ≤ 5.5 V, V_{SS} = 0 V)

Parameter	Symbol	Conditions	MIN.	TYP.	MAX.	Unit
CPU/peripheral hardware clock frequency	f_{CLK}	2.4 V ≤ V_{DD} ≤ 5.5 V	1		32	MHz
Number of code flash rewrites Notes 1,2,3	C_{erwr}	Retained for 20 years T_A = 85°C Note 4	1,000			Times
Number of data flash rewrites Notes 1,2,3		Retained for 1 years T_A = 25°C		1,000,000		
		Retained for 5 years T_A = 85°C Note 4	100,000			
		Retained for 20 years T_A = 85°C Note 4	10,000			

Notes 1. 1 erase + 1 write after the erase is regarded as 1 rewrite.The retaining years are until next rewrite after the rewrite.

2. When using flash memory programmer and Renesas Electronics self programming library.

3. These are the characteristics of the flash memory and the results obtained from reliability testing by Renesas Electronics Corporation.

4. This temperature is the average value at which data are retained.

3.9 Dedicated Flash Memory Programmer Communication (UART)

(T_A = –40 to +105°C, 2.4 V ≤ EV_{DD0} = EV_{DD1} ≤ V_{DD} ≤ 5.5 V, V_{SS} = EV_{SS0} = EV_{SS1} = 0 V)

Parameter	Symbol	Conditions	MIN.	TYP.	MAX.	Unit
Transfer rate		During serial programming	115,200		1,000,000	bps

3.10 Timing of Entry to Flash Memory Programming Modes

(T_A = –40 to +105°C, 2.4 V ≤ EV_{DD0} = EV_{DD1} ≤ V_{DD} ≤ 5.5 V, V_{SS} = EV_{SS0} = EV_{SS1} = 0 V)

Parameter	Symbol	Conditions	MIN.	TYP.	MAX.	Unit
Time to complete the communication for the initial setting after the external reset is released	t_{SUINIT}	POR and LVD reset must be released before the external reset is released.			100	ms
Time to release the external reset after the TOOL0 pin is set to the low level	t_{SU}	POR and LVD reset must be released before the external reset is released.	10			μs
Time to hold the TOOL0 pin at the low level after the external reset is released (excluding the processing time of the firmware to control the flash memory)	t_{HD}	POR and LVD reset must be released before the external reset is released.	1			ms

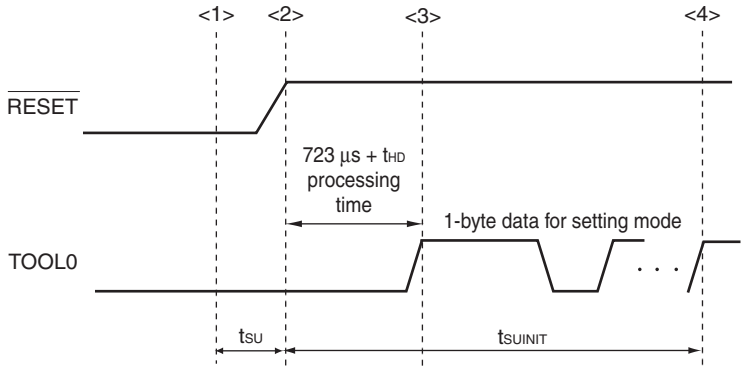

<1> The low level is input to the TOOL0 pin.

<2> The external reset is released (POR and LVD reset must be released before the external reset is released.).

<3> The TOOL0 pin is set to the high level.

<4> Setting of the flash memory programming mode by UART reception and complete the baud rate setting.

Remark t_{SUINIT}: Communication for the initial setting must be completed within 100 ms after the external reset is released during this period.

t_{SU}: Time to release the external reset after the TOOL0 pin is set to the low level

t_{HD}: Time to hold the TOOL0 pin at the low level after the external reset is released (excluding the processing time of the firmware to control the flash memory)

4. PACKAGE DRAWINGS

4.1 20-pin Products

R5F1006AASP, R5F1006CASP, R5F1006DASP, R5F1006EASP
R5F1016AASP, R5F1016CASP, R5F1016DASP, R5F1016EASP
R5F1006ADSP, R5F1006CDSP, R5F1006DDSP, R5F1006EDSP
R5F1016ADSP, R5F1016CDSP, R5F1016DDSP, R5F1016EDSP
R5F1006AGSP, R5F1006CGSP, R5F1006DGSP, R5F1006EGSP

JEITA Package Code	RENESAS Code	Previous Code	MASS (TYP.) [g]
P-LSSOP20-0300-0.65	PLSP0020JC-A	S20MC-65-5A4-3	0.12

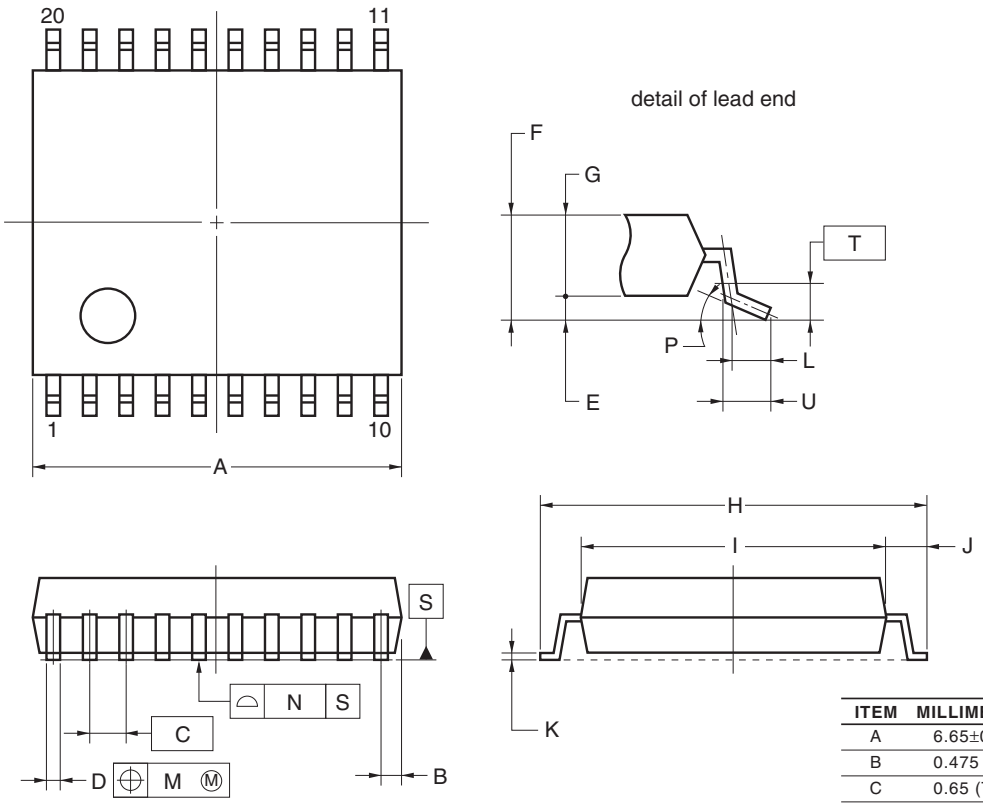

NOTE
Each lead centerline is located within 0.13 mm of its true position (T.P.) at maximum material condition.

ITEM	MILLIMETERS
A	6.65±0.15
B	0.475 MAX.
C	0.65 (T.P.)
D	$0.24^{+0.08}_{-0.07}$
E	0.1±0.05
F	1.3±0.1
G	1.2
H	8.1±0.2
I	6.1±0.2
J	1.0±0.2
K	0.17±0.03
L	0.5
M	0.13
N	0.10
P	$3^{\circ}{}^{+5^{\circ}}_{-3^{\circ}}$
T	0.25
U	0.6±0.15

©2012 Renesas Electronics Corporation. All rights reserved.

4.2 24-pin Products

R5F1007AANA, R5F1007CANA, R5F1007DANA, R5F1007EANA
R5F1017AANA, R5F1017CANA, R5F1017DANA, R5F1017EANA
R5F1007ADNA, R5F1007CDNA, R5F1007DDNA, R5F1007EDNA
R5F1017ADNA, R5F1017CDNA, R5F1017DDNA, R5F1017EDNA
R5F1007AGNA, R5F1007CGNA, R5F1007DGNA, R5F1007EGNA

JEITA Package code	RENESAS code	Previous code	MASS(TYP.)[g]
P-HWQFN24-4x4-0.50	PWQN0024KE-A	P24K8-50-CAB-3	0.04

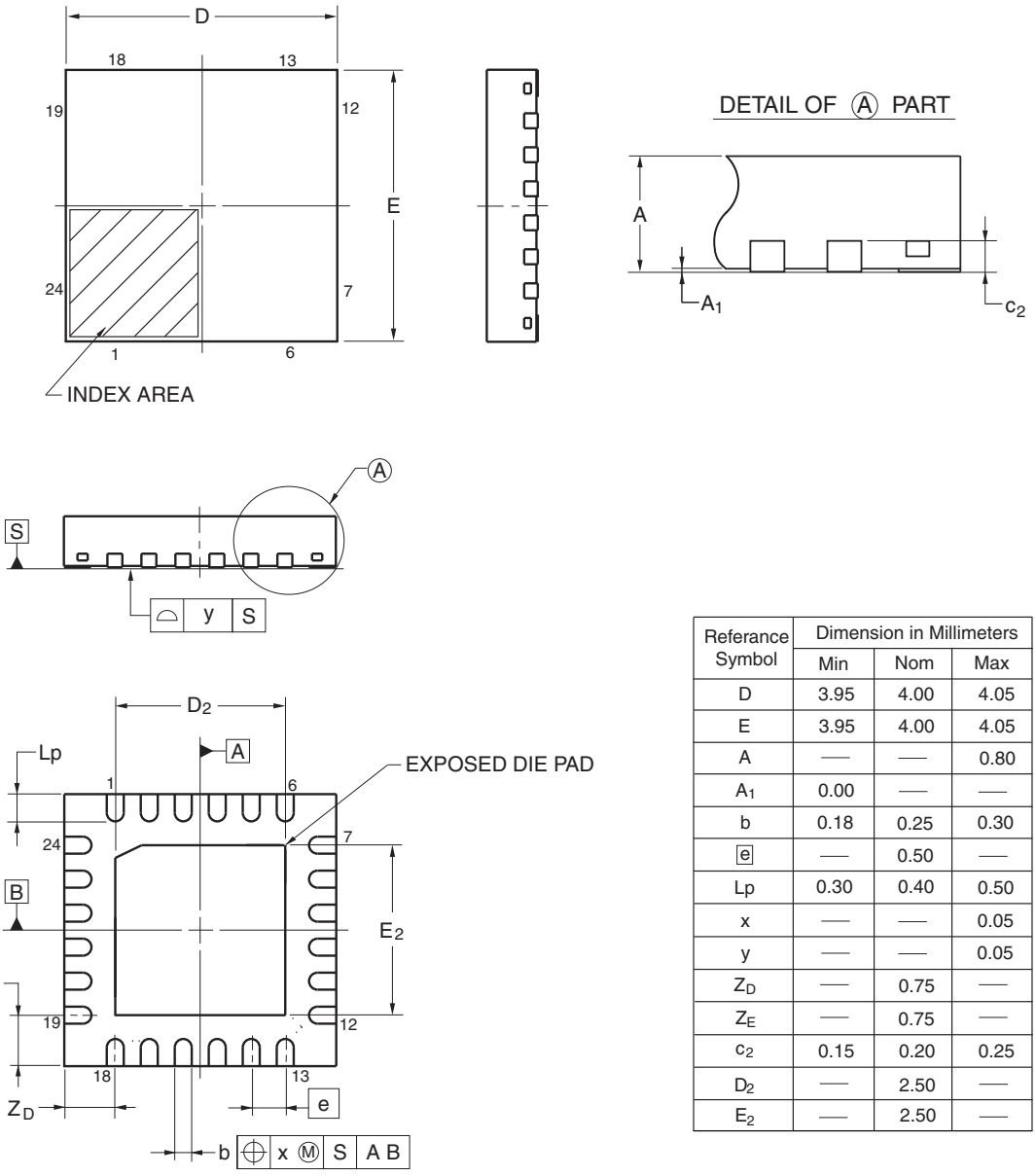

Referance Symbol	Dimension in Millimeters		
	Min	Nom	Max
D	3.95	4.00	4.05
E	3.95	4.00	4.05
A	—	—	0.80
A_1	0.00	—	—
b	0.18	0.25	0.30
e	—	0.50	—
Lp	0.30	0.40	0.50
x	—	—	0.05
y	—	—	0.05
Z_D	—	0.75	—
Z_E	—	0.75	—
c_2	0.15	0.20	0.25
D_2	—	2.50	—
E_2	—	2.50	—

4.3 25-pin Products

R5F1008AALA, R5F1008CALA, R5F1008DALA, R5F1008EALA
R5F1018AALA, R5F1018CALA, R5F1018DALA, R5F1018EALA
R5F1008AGLA, R5F1008CGLA, R5F1008DGLA, R5F1008EGLA

JEITA Package Code	RENESAS Code	Previous Code	MASS (TYP.) [g]
P-WFLGA25-3x3-0.50	PWLG0025KA-A	P25FC-50-2N2-2	0.01

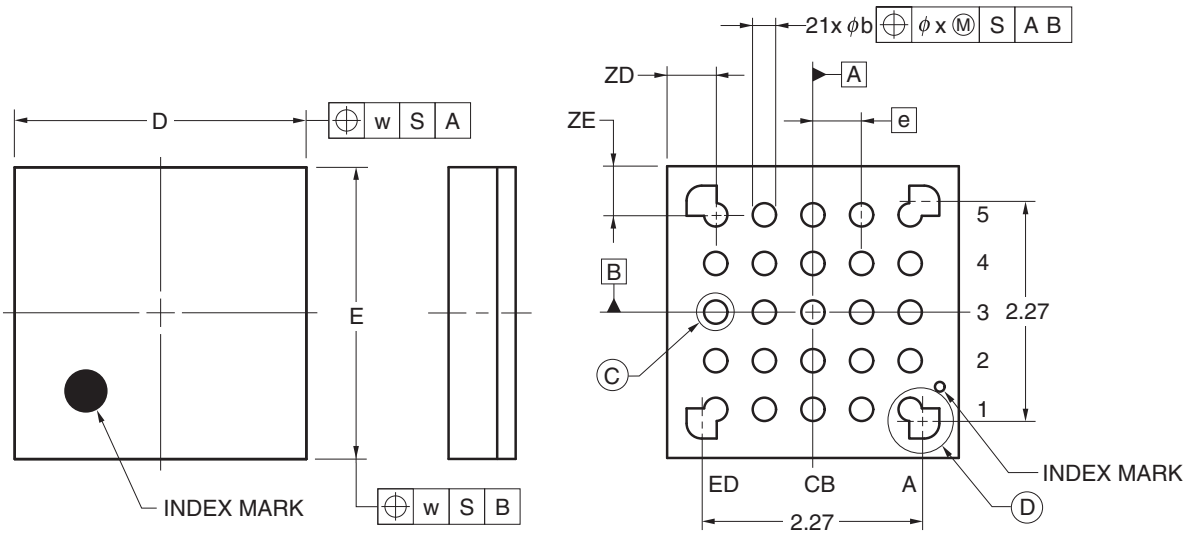

(UNIT:mm)

ITEM	DIMENSIONS
D	3.00 ±0.10
E	3.00 ±0.10
w	0.20
e	0.50
A	0.69 ±0.07
b	0.24 ±0.05
x	0.05
y	0.08
y1	0.20
ZD	0.50
ZE	0.50

DETAIL OF Ⓒ PART

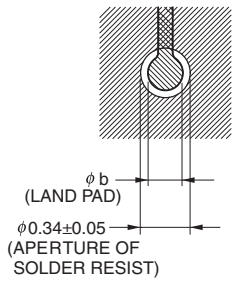

DETAIL OF Ⓓ PART

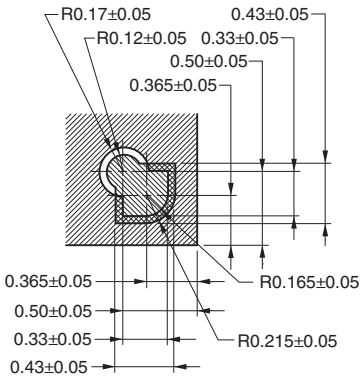

©2012 Renesas Electronics Corporation. All rights reserved.

4.4 30-pin Products

R5F100AAASP, R5F100ACASP, R5F100ADASP, R5F100AEASP, R5F100AFASP, R5F100AGASP
R5F101AAASP, R5F101ACASP, R5F101ADASP, R5F101AEASP, R5F101AFASP, R5F101AGASP
R5F100AADSP, R5F100ACDSP, R5F100ADDSP, R5F100AEDSP, R5F100AFDSP, R5F100AGDSP
R5F101AADSP, R5F101ACDSP, R5F101ADDSP, R5F101AEDSP, R5F101AFDSP, R5F101AGDSP
R5F100AAGSP, R5F100ACGSP, R5F100ADGSP,R5F100AEGSP, R5F100AFGSP, R5F100AGGSP

JEITA Package Code	RENESAS Code	Previous Code	MASS (TYP.) [g]
P-LSSOP30-0300-0.65	PLSP0030JB-B	S30MC-65-5A4-3	0.18

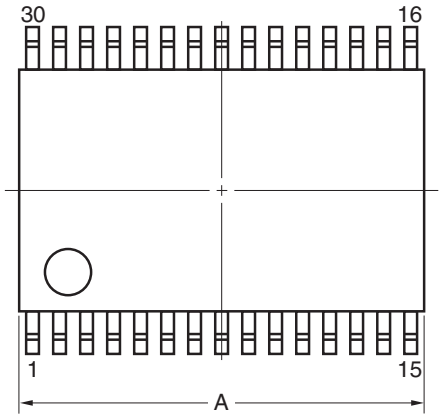

detail of lead end

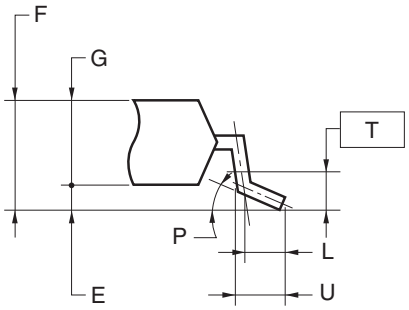

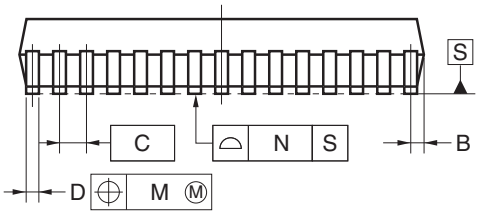

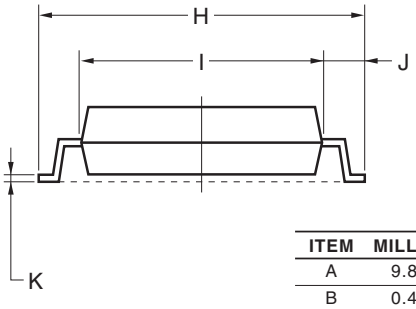

NOTE
Each lead centerline is located within 0.13 mm of its true position (T.P.) at maximum material condition.

ITEM	MILLIMETERS
A	9.85±0.15
B	0.45 MAX.
C	0.65 (T.P.)
D	$0.24^{+0.08}_{-0.07}$
E	0.1±0.05
F	1.3±0.1
G	1.2
H	8.1±0.2
I	6.1±0.2
J	1.0±0.2
K	0.17±0.03
L	0.5
M	0.13
N	0.10
P	$3^{\circ}{}^{+5^{\circ}}_{-3^{\circ}}$
T	0.25
U	0.6±0.15

©2012 Renesas Electronics Corporation. All rights reserved.

4.5 32-pin Products

R5F100BAANA, R5F100BCANA, R5F100BDANA, R5F100BEANA, R5F100BFANA, R5F100BGANA
R5F101BAANA, R5F101BCANA, R5F101BDANA, R5F101BEANA, R5F101BFANA, R5F101BGANA
R5F100BADNA, R5F100BCDNA, R5F100BDDNA, R5F100BEDNA, R5F100BFDNA, R5F100BGDNA
R5F101BADNA, R5F101BCDNA, R5F101BDDNA, R5F101BEDNA, R5F101BFDNA, R5F101BGDNA
R5F100BAGNA, R5F100BCGNA, R5F100BDGNA,R5F100BEGNA, R5F100BFGNA, R5F100BGGNA

JEITA Package code	RENESAS code	Previous code	MASS (TYP.)[g]
P-HWQFN32-5x5-0.50	PWQN0032KB-A	P32K8-50-3B4-5	0.06

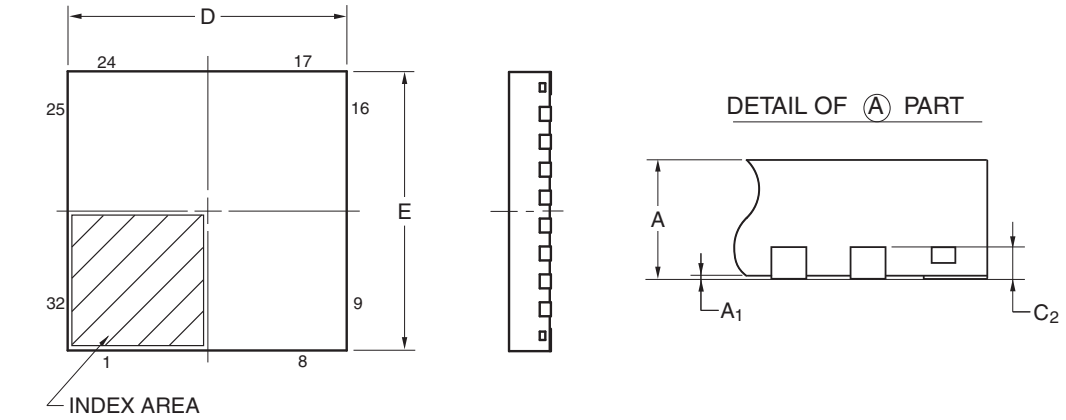

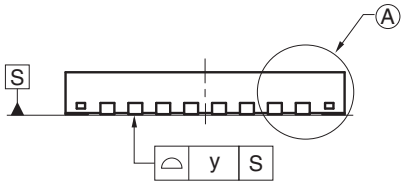

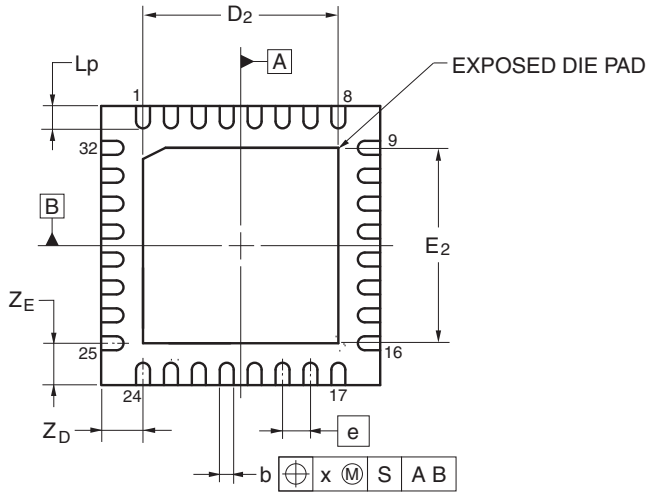

Referance Symbol	Dimension in Millimeters		
	Min	Nom	Max
D	4.95	5.00	5.05
E	4.95	5.00	5.05
A	—	—	0.80
A_1	0.00	—	—
b	0.18	0.25	0.30
e	—	0.50	—
Lp	0.30	0.40	0.50
x	—	—	0.05
y	—	—	0.05
Z_D	—	0.75	—
Z_E	—	0.75	—
c_2	0.15	0.20	0.25
D_2	—	3.50	—
E_2	—	3.50	—

©2013 Renesas Electronics Corporation. All rights reserved.

4.6 36-pin Products

R5F100CAALA, R5F100CCALA, R5F100CDALA, R5F100CEALA, R5F100CFALA, R5F100CGALA
R5F101CAALA, R5F101CCALA, R5F101CDALA, R5F101CEALA, R5F101CFALA, R5F101CGALA
R5F100CAGLA, R5F100CCGLA, R5F100CDGLA, R5F100CEGLA, R5F100CFGLA, R5F100CGGLA

JEITA Package Code	RENESAS Code	Previous Code	MASS (TYP.) [g]
P-WFLGA36-4x4-0.50	PWLG0036KA-A	P36FC-50-AA4-2	0.023

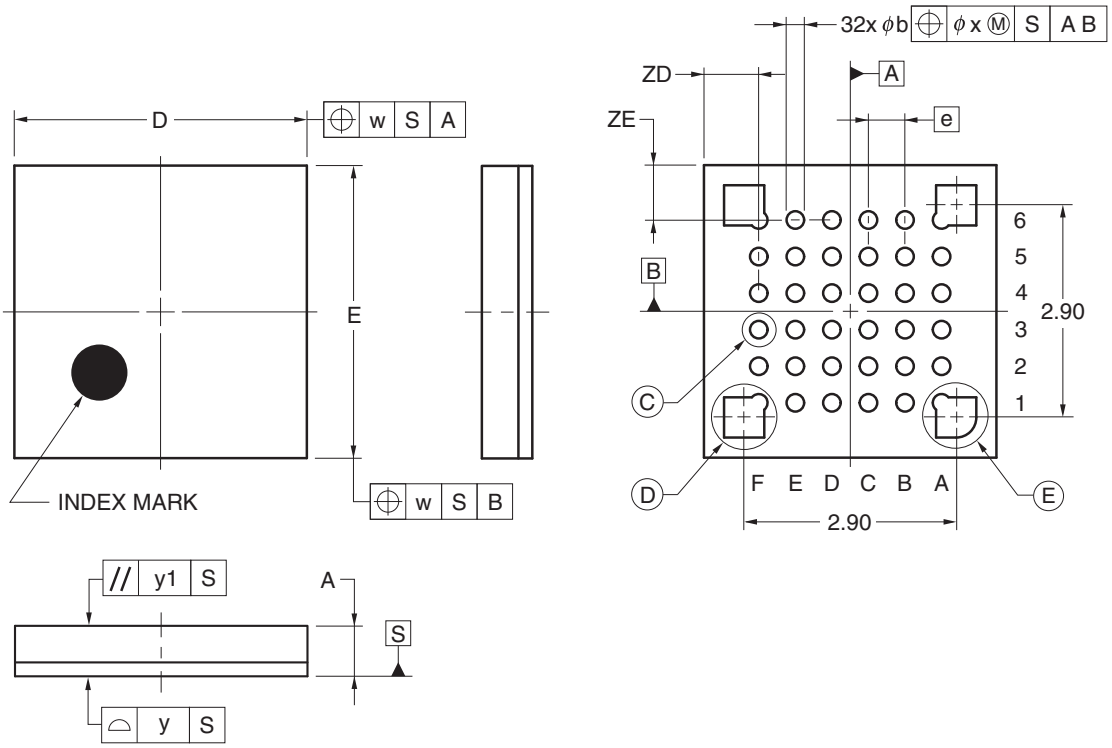

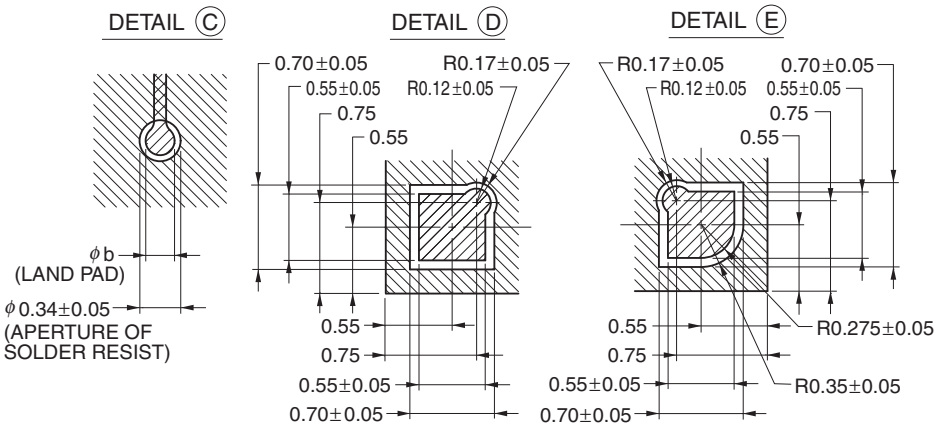

(UNIT:mm)

ITEM	DIMENSIONS
D	4.00±0.10
E	4.00±0.10
w	0.20
e	0.50
A	0.69±0.07
b	0.24±0.05
x	0.05
y	0.08
y1	0.20
ZD	0.75
ZE	0.75

©2012 Renesas Electronics Corporation. All rights reserved.

4.7 40-pin Products

R5F100EAANA, R5F100ECANA, R5F100EDANA, R5F100EEANA, R5F100EFANA, R5F100EGANA, R5F100EHANA
R5F101EAANA, R5F101ECANA, R5F101EDANA, R5F101EEANA, R5F101EFANA, R5F101EGANA, R5F101EHANA
R5F100EADNA, R5F100ECDNA, R5F100EDDNA, R5F100EEDNA, R5F100EFDNA, R5F100EGDNA,
R5F100EHDNA
R5F101EADNA, R5F101ECDNA, R5F101EDDNA, R5F101EEDNA, R5F101EFDNA, R5F101EGDNA,
R5F101EHDNA
R5F100EAGNA, R5F100ECGNA, R5F100EDGNA, R5F100EEGNA, R5F100EFGNA, R5F100EGGNA,
R5F100EHGNA

JEITA Package code	RENESAS code	Previous code	MASS (TYP.) [g]
P-HWQFN40-6x6-0.50	PWQN0040KC-A	P40K8-50-4B4-5	0.09

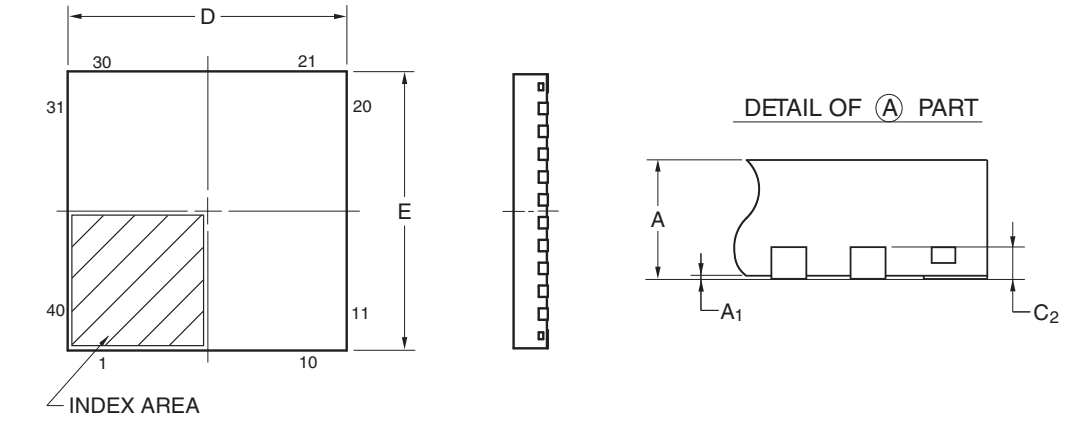

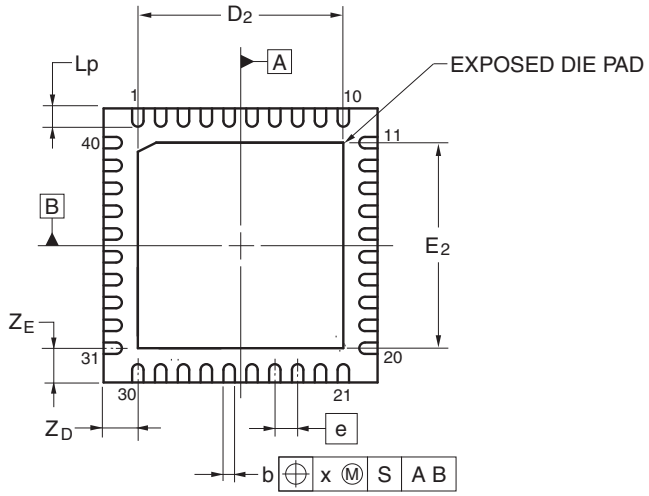

Referance Symbol	Dimension in Millimeters		
	Min	Nom	Max
D	5.95	6.00	6.05
E	5.95	6.00	6.05
A	—	—	0.80
A_1	0.00	—	—
b	0.18	0.25	0.30
e	—	0.50	—
Lp	0.30	0.40	0.50
x	—	—	0.05
y	—	—	0.05
Z_D	—	0.75	—
Z_E	—	0.75	—
c_2	0.15	0.20	0.25
D_2	—	4.50	—
E_2	—	4.50	—

©2013 Renesas Electronics Corporation. All rights reserved.

4.8 44-pin Products

R5F100FAAFP, R5F100FCAFP, R5F100FDAFP, R5F100FEAFP, R5F100FFAFP, R5F100FGAFP, R5F100FHAFP, R5F100FJAFP, R5F100FKAFP, R5F100FLAFP
R5F101FAAFP, R5F101FCAFP, R5F101FDAFP, R5F101FEAFP, R5F101FFAFP, R5F101FGAFP, R5F101FHAFP, R5F101FJAFP, R5F101FKAFP, R5F101FLAFP
R5F100FADFP, R5F100FCDFP, R5F100FDDFP, R5F100FEDFP, R5F100FFDFP, R5F100FGDFP, R5F100FHDFP, R5F100FJDFP, R5F100FKDFP, R5F100FLDFP
R5F101FADFP, R5F101FCDFP, R5F101FDDFP, R5F101FEDFP, R5F101FFDFP, R5F101FGDFP, R5F101FHDFP, R5F101FJDFP, R5F101FKDFP, R5F101FLDFP
R5F100FAGFP, R5F100FCGFP, R5F100FDGFP, R5F100FEGFP, R5F100FFGFP, R5F100FGGFP, R5F100FHGFP, R5F100FJGFP

JEITA Package Code	RENESAS Code	Previous Code	MASS (TYP.) [g]
P-LQFP44-10x10-0.80	PLQP0044GC-A	P44GB-80-UES-2	0.36

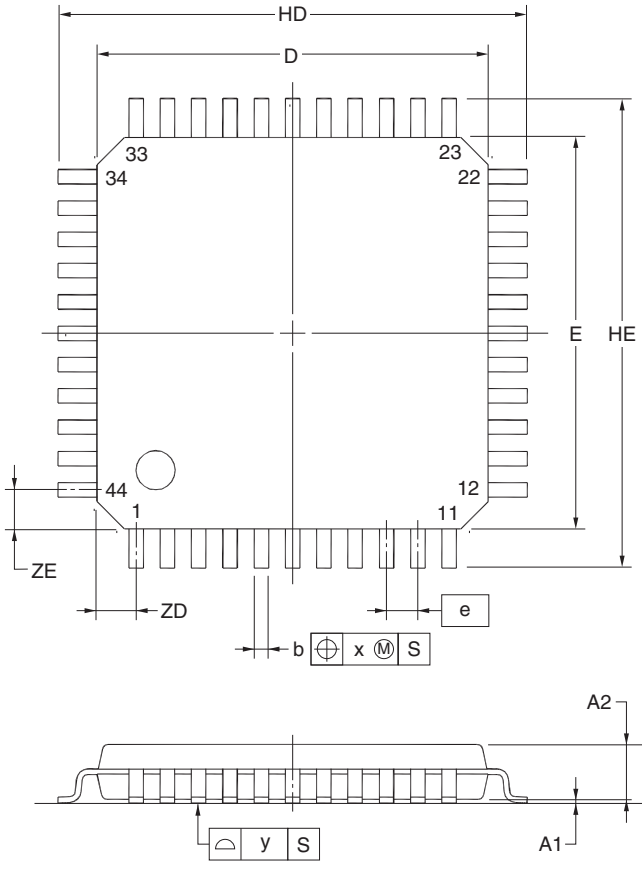

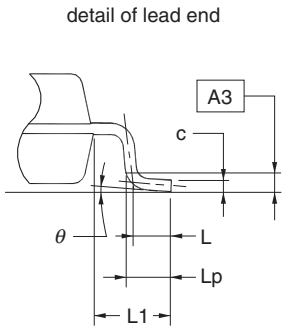

(UNIT:mm)

ITEM	DIMENSIONS
D	10.00±0.20
E	10.00±0.20
HD	12.00±0.20
HE	12.00±0.20
A	1.60 MAX.
A1	0.10±0.05
A2	1.40±0.05
A3	0.25
b	$0.37^{+0.08}_{-0.07}$
c	$0.145^{+0.055}_{-0.045}$
L	0.50
Lp	0.60±0.15
L1	1.00±0.20
θ	$3^{\circ}{}^{+5^{\circ}}_{-3^{\circ}}$
e	0.80
x	0.20
y	0.10
ZD	1.00
ZE	1.00

NOTE
Each lead centerline is located within 0.20 mm of its true position at maximum material condition.

©2012 Renesas Electronics Corporation. All rights reserved.

4.9 48-pin Products

R5F100GAAFB, R5F100GCAFB, R5F100GDAFB, R5F100GEAFB, R5F100GFAFB, R5F100GGAFB, R5F100GHAFB, R5F100GJAFB, R5F100GKAFB, R5F100GLAFB
R5F101GAAFB, R5F101GCAFB, R5F101GDAFB, R5F101GEAFB, R5F101GFAFB, R5F101GGAFB, R5F101GHAFB, R5F101GJAFB, R5F101GKAFB, R5F101GLAFB
R5F100GADFB, R5F100GCDFB, R5F100GDDFB, R5F100GEDFB, R5F100GFDFB, R5F100GGDFB, R5F100GHDFB, R5F100GJDFB, R5F100GKDFB, R5F100GLDFB
R5F101GADFB, R5F101GCDFB, R5F101GDDFB, R5F101GEDFB, R5F101GFDFB, R5F101GGDFB, R5F101GHDFB, R5F101GJDFB, R5F101GKDFB, R5F101GLDFB
R5F100GAGFB, R5F100GCGFB, R5F100GDGFB, R5F100GEGFB, R5F100GFGFB, R5F100GGGFB, R5F100GHGFB, R5F100GJGFB

JEITA Package Code	RENESAS Code	Previous Code	MASS (TYP.) [g]
P-LFQFP48-7x7-0.50	PLQP0048KF-A	P48GA-50-8EU-1	0.16

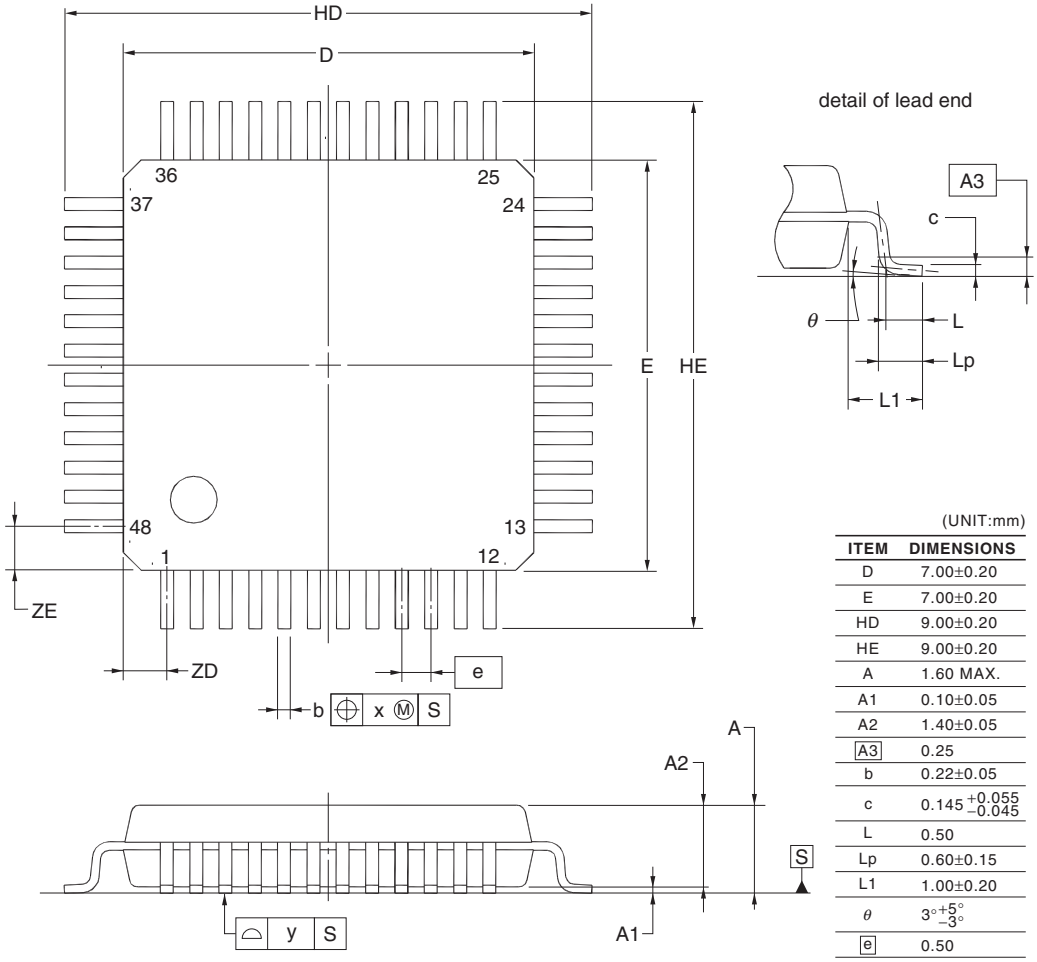

(UNIT:mm)

ITEM	DIMENSIONS
D	7.00±0.20
E	7.00±0.20
HD	9.00±0.20
HE	9.00±0.20
A	1.60 MAX.
A1	0.10±0.05
A2	1.40±0.05
A3	0.25
b	0.22±0.05
c	$0.145^{+0.055}_{-0.045}$
L	0.50
Lp	0.60±0.15
L1	1.00±0.20
θ	$3^{\circ}{}^{+5^{\circ}}_{-3^{\circ}}$
e	0.50
x	0.08
y	0.08
ZD	0.75
ZE	0.75

NOTE
Each lead centerline is located within 0.08 mm of its true position at maximum material condition.

©2012 Renesas Electronics Corporation. All rights reserved.

R5F100GAANA, R5F100GCANA, R5F100GDANA, R5F100GEANA, R5F100GFANA, R5F100GGANA, R5F100GHANA, R5F100GJANA, R5F100GKANA, R5F100GLANA
R5F101GAANA, R5F101GCANA, R5F101GDANA, R5F101GEANA, R5F101GFANA, R5F101GGANA, R5F101GHANA, R5F101GJANA, R5F101GKANA, R5F101GLANA
R5F100GADNA, R5F100GCDNA, R5F100GDDNA, R5F100GEDNA, R5F100GFDNA, R5F100GGDNA, R5F100GHDNA, R5F100GJDNA, R5F100GKDNA, R5F100GLDNA
R5F101GADNA, R5F101GCDNA, R5F101GDDNA, R5F101GEDNA, R5F101GFDNA, R5F101GGDNA, R5F101GHDNA, R5F101GJDNA, R5F101GKDNA, R5F101GLDNA
R5F100GAGNA, R5F100GCGNA, R5F100GDGNA, R5F100GEGNA, R5F100GFGNA, R5F100GGGNA, R5F100GHGNA, R5F100GJGNA

JEITA Package code	RENESAS code	Previous code	MASS(TYP.)[g]
P-HWQFN48-7x7-0.50	PWQN0048KB-A	48PJN-A P48K8-50-5B4-6	0.13

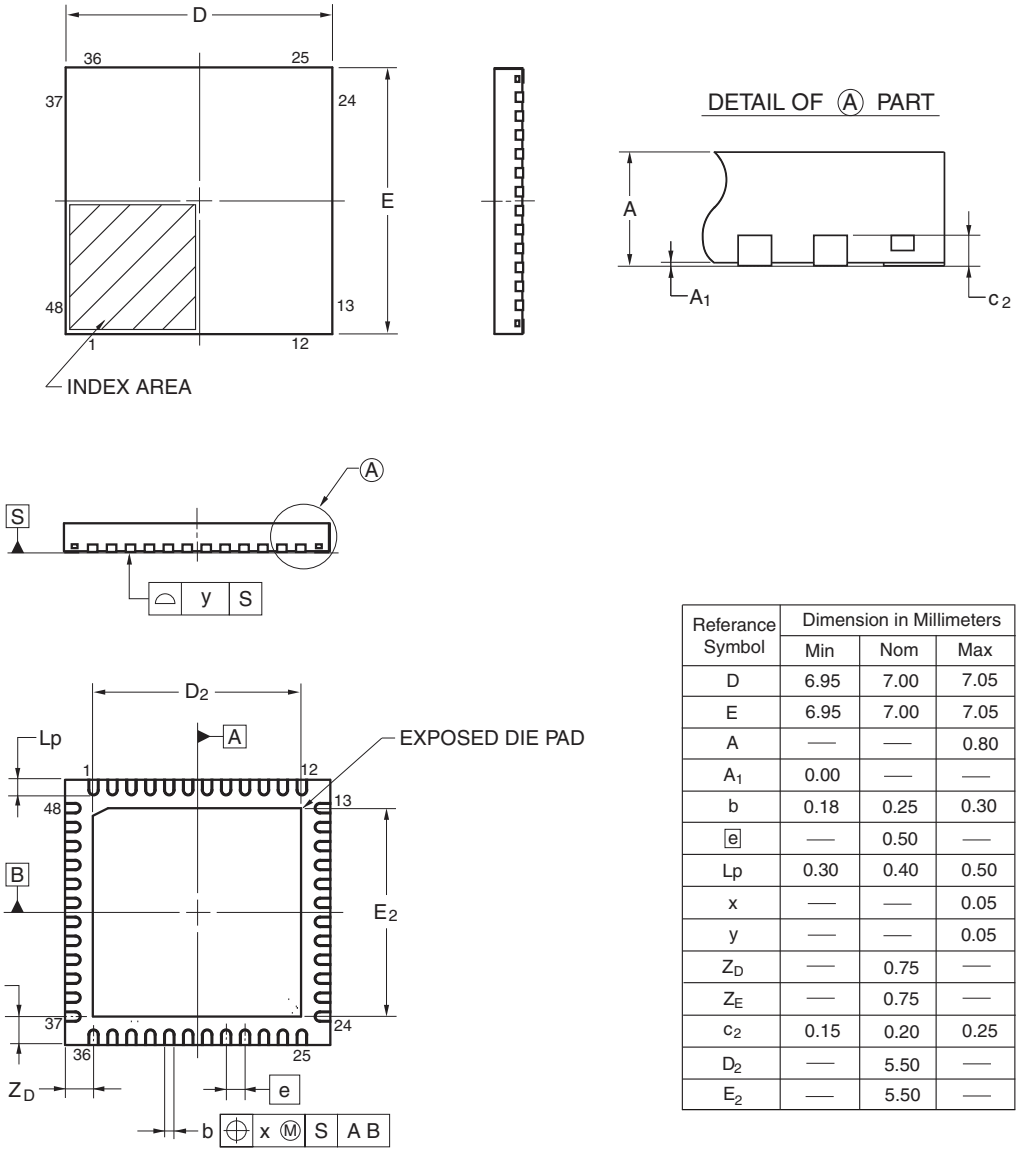

Referance Symbol	Dimension in Millimeters		
	Min	Nom	Max
D	6.95	7.00	7.05
E	6.95	7.00	7.05
A	—	—	0.80
A_1	0.00	—	—
b	0.18	0.25	0.30
e	—	0.50	—
Lp	0.30	0.40	0.50
x	—	—	0.05
y	—	—	0.05
Z_D	—	0.75	—
Z_E	—	0.75	—
c_2	0.15	0.20	0.25
D_2	—	5.50	—
E_2	—	5.50	—

©2013 Renesas Electronics Corporation. All rights reserved.

4.10 52-pin Products

R5F100JCAFA, R5F100JDAFA, R5F100JEAFA, R5F100JFAFA, R5F100JGAFA, R5F100JHAFA, R5F100JJAFA, R5F100JKAFA, R5F100JLAFA
R5F101JCAFA, R5F101JDAFA, R5F101JEAFA, R5F101JFAFA, R5F101JGAFA, R5F101JHAFA, R5F101JJAFA, R5F101JKAFA, R5F101JLAFA
R5F100JCDFA, R5F100JDDFA, R5F100JEDFA, R5F100JFDFA, R5F100JGDFA, R5F100JHDFA, R5F100JJDFA, R5F100JKDFA, R5F100JLDFA
R5F101JCDFA, R5F101JDDFA, R5F101JEDFA, R5F101JFDFA, R5F101JGDFA, R5F101JHDFA, R5F101JJDFA, R5F101JKDFA, R5F101JLDFA
R5F100JCGFA, R5F100JDGFA, R5F100JEGFA, R5F100JFGFA, R5F100JGGFA, R5F100JHGFA, R5F100JJGFA

JEITA Package Code	RENESAS Code	Previous Code	MASS (TYP.) [g]
P-LQFP52-10x10-0.65	PLQP0052JA-A	P52GB-65-GBS-1	0.3

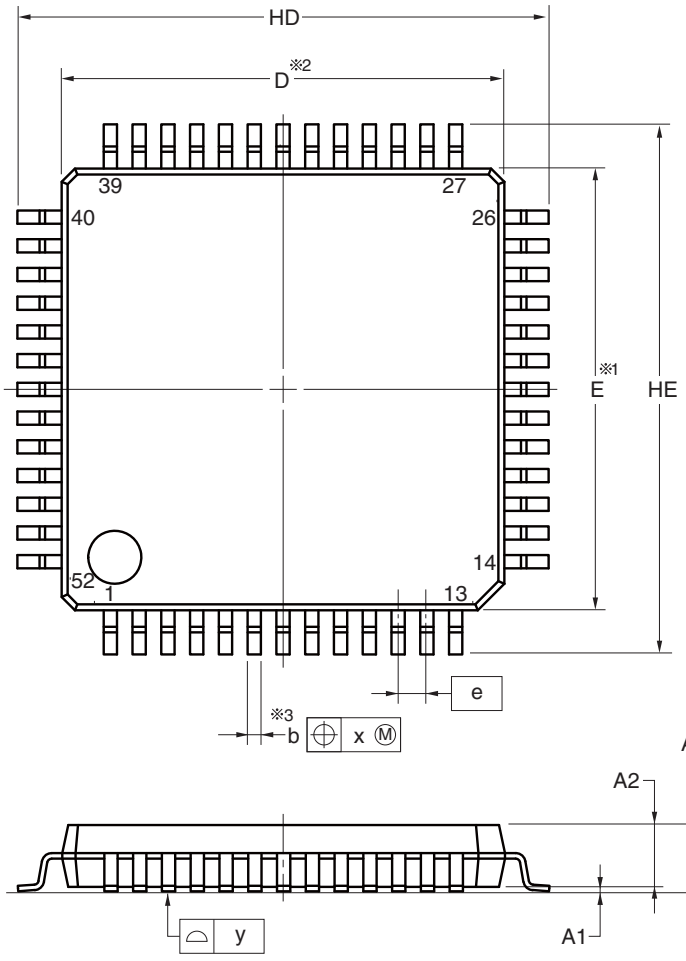

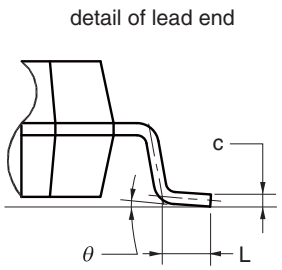

(UNIT:mm)

ITEM	DIMENSIONS
D	10.00±0.10
E	10.00±0.10
HD	12.00±0.20
HE	12.00±0.20
A	1.70 MAX.
A1	0.10±0.05
A2	1.40
b	0.32±0.05
c	0.145±0.055
L	0.50±0.15
θ	0° to 8°
e	0.65
x	0.13
y	0.10

NOTE

1.Dimensions "※1" and "※2" do not include mold flash.

2.Dimension "※3" does not include trim offset.

© 2012 Renesas Electronics Corporation. All rights reserved.

4.11 64-pin Products

R5F100LCAFA, R5F100LDAFA, R5F100LEAFA, R5F100LFAFA, R5F100LGAFA, R5F100LHAFA, R5F100LJAFA, R5F100LKAFA, R5F100LLAFA
R5F101LCAFA, R5F101LDAFA, R5F101LEAFA, R5F101LFAFA, R5F101LGAFA, R5F101LHAFA, R5F101LJAFA, R5F101LKAFA, R5F101LLAFA
R5F100LCDFA, R5F100LDDFA, R5F100LEDFA, R5F100LFDFA, R5F100LGDFA, R5F100LHDFA, R5F100LJDFA, R5F100LKDFA, R5F100LLDFA
R5F101LCDFA, R5F101LDDFA, R5F101LEDFA, R5F101LFDFA, R5F101LGDFA, R5F101LHDFA, R5F101LJDFA, R5F101LKDFA, R5F101LLDFA
R5F100LCGFA, R5F100LDGFA, R5F100LEGFA, R5F100LFGFA, R5F100LGGFA, R5F100LHGFA, R5F100LJGFA

JEITA Package Code	RENESAS Code	Previous Code	MASS (TYP.) [g]
P-LQFP64-12x12-0.65	PLQP0064JA-A	P64GK-65-UET-2	0.51

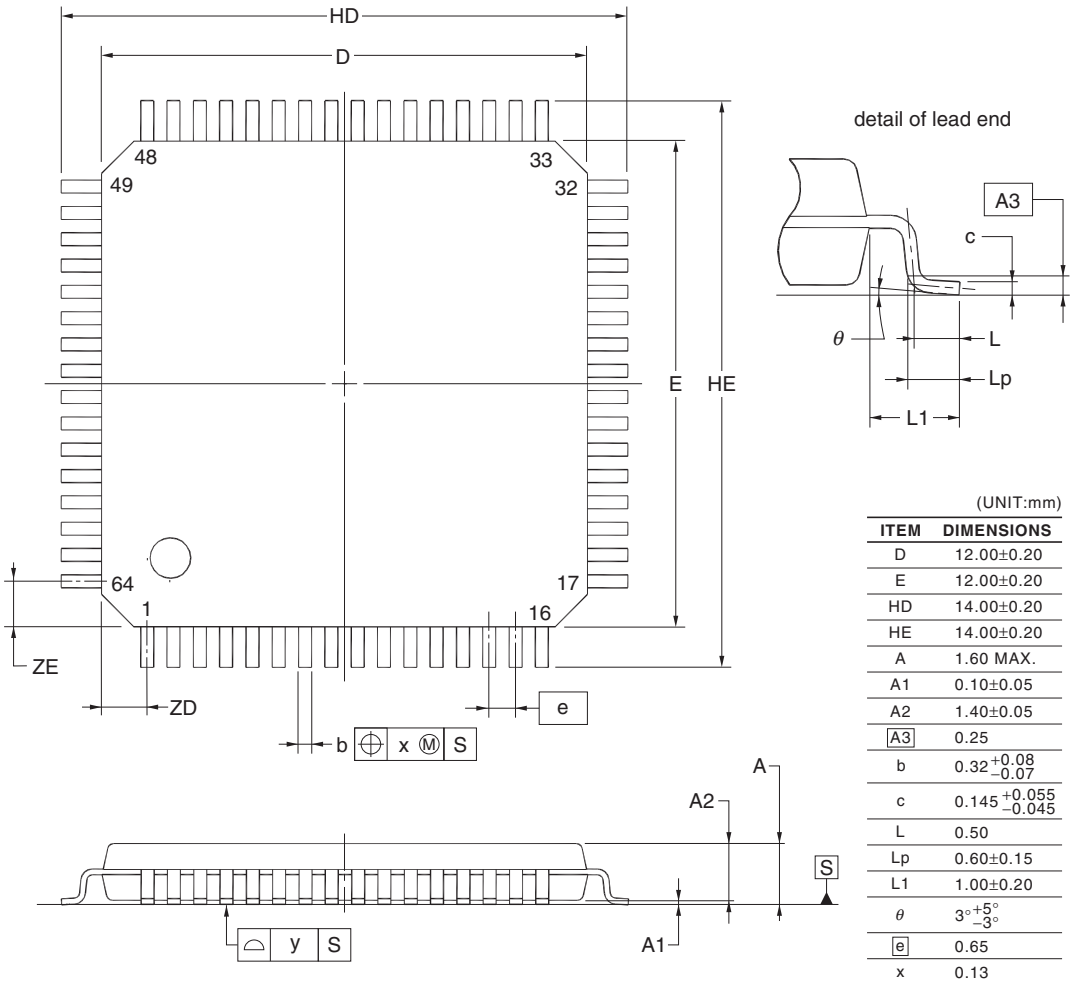

(UNIT:mm)

ITEM	DIMENSIONS
D	12.00±0.20
E	12.00±0.20
HD	14.00±0.20
HE	14.00±0.20
A	1.60 MAX.
A1	0.10±0.05
A2	1.40±0.05
A3	0.25
b	$0.32^{+0.08}_{-0.07}$
c	$0.145^{+0.055}_{-0.045}$
L	0.50
Lp	0.60±0.15
L1	1.00±0.20
θ	$3^{\circ}{}^{+5^{\circ}}_{-3^{\circ}}$
e	0.65
x	0.13
y	0.10
ZD	1.125
ZE	1.125

NOTE
Each lead centerline is located within 0.13 mm of its true position at maximum material condition.

©2012 Renesas Electronics Corporation. All rights reserved.

R5F100LCAFB, R5F100LDAFB, R5F100LEAFB, R5F100LFAFB, R5F100LGAFB, R5F100LHAFB, R5F100LJAFB, R5F100LKAFB, R5F100LLAFB
R5F101LCAFB, R5F101LDAFB, R5F101LEAFB, R5F101LFAFB, R5F101LGAFB, R5F101LHAFB, R5F101LJAFB, R5F101LKAFB, R5F101LLAFB
R5F100LCDFB, R5F100LDDFB, R5F100LEDFB, R5F100LFDFB, R5F100LGDFB, R5F100LHDFB, R5F100LJDFB, R5F100LKDFB, R5F100LLDFB
R5F101LCDFB, R5F101LDDFB, R5F101LEDFB, R5F101LFDFB, R5F101LGDFB, R5F101LHDFB, R5F101LJDFB, R5F101LKDFB, R5F101LLDFB
R5F100LCGFB, R5F100LDGFB, R5F100LEGFB, R5F100LFGFB, R5F100LGGFB, R5F100LHGFB, R5F100LJGFB

JEITA Package Code	RENESAS Code	Previous Code	MASS (TYP.) [g]
P-LFQFP64-10x10-0.50	PLQP0064KF-A	P64GB-50-UEU-2	0.35

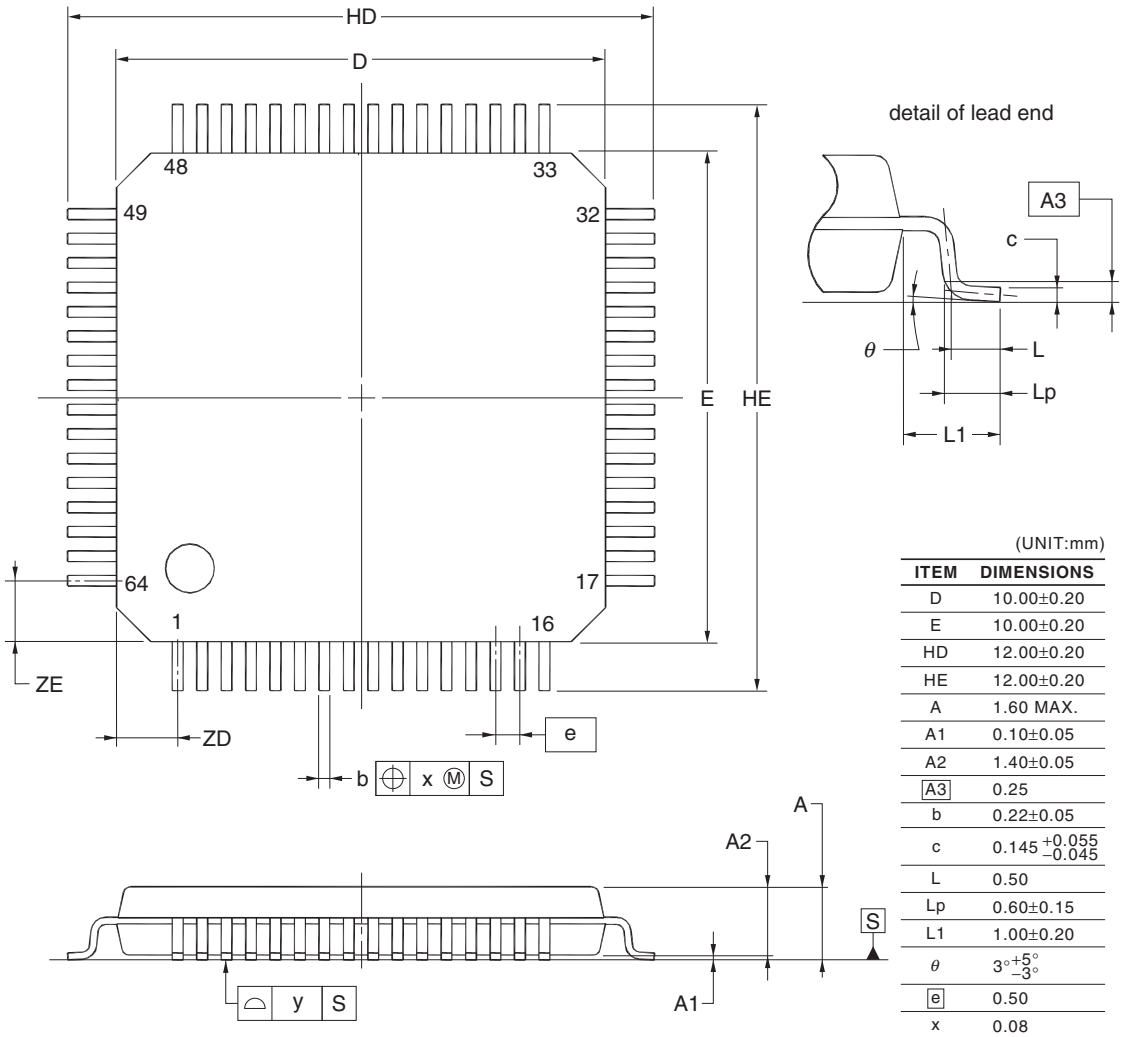

(UNIT:mm)

ITEM	DIMENSIONS
D	10.00±0.20
E	10.00±0.20
HD	12.00±0.20
HE	12.00±0.20
A	1.60 MAX.
A1	0.10±0.05
A2	1.40±0.05
A3	0.25
b	0.22±0.05
c	$0.145^{+0.055}_{-0.045}$
L	0.50
Lp	0.60±0.15
L1	1.00±0.20
θ	$3^{\circ}{}^{+5^{\circ}}_{-3^{\circ}}$
e	0.50
x	0.08
y	0.08
ZD	1.25
ZE	1.25

NOTE
Each lead centerline is located within 0.08 mm of its true position at maximum material condition.

©2012 Renesas Electronics Corporation. All rights reserved.

R5F100LCABG, R5F100LDABG, R5F100LEABG, R5F100LFABG, R5F100LGABG, R5F100LHABG, R5F100LJABG
R5F101LCABG, R5F101LDABG, R5F101LEABG, R5F101LFABG, R5F101LGABG, R5F101LHABG, R5F101LJABG
R5F100LCGBG, R5F100LDGBG, R5F100LEGBG, R5F100LFGBG, R5F100LGGBG, R5F100LHGBG, R5F100LJGBG

JEITA Package Code	RENESAS Code	Previous Code	MASS (TYP.) [g]
P-VFBGA64-4x4-0.40	PVBG0064LA-A	P64F1-40-AA2-2	0.03

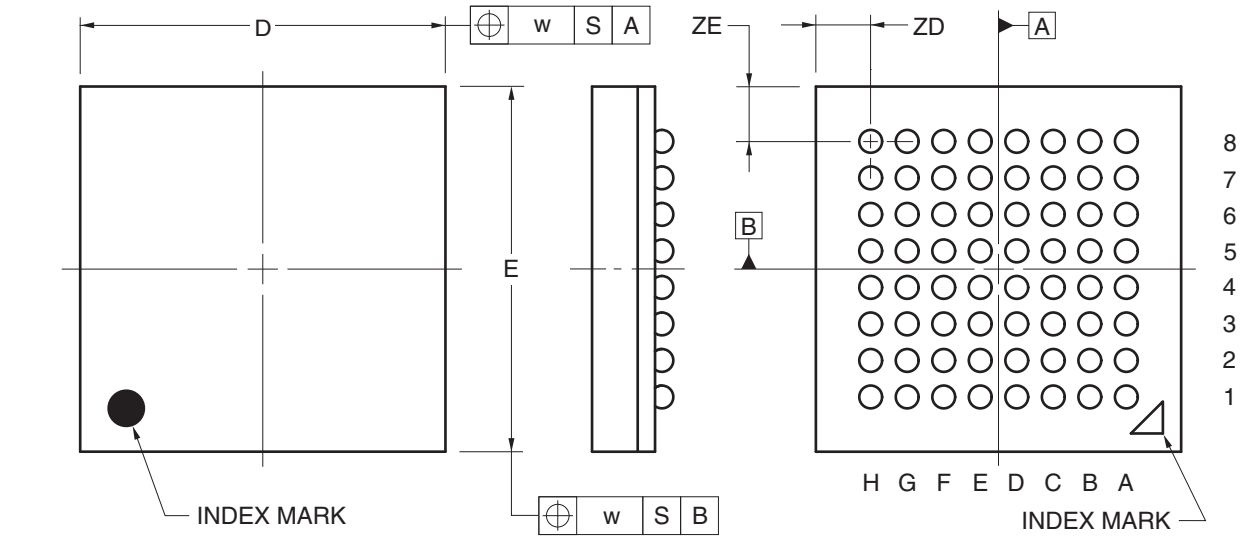

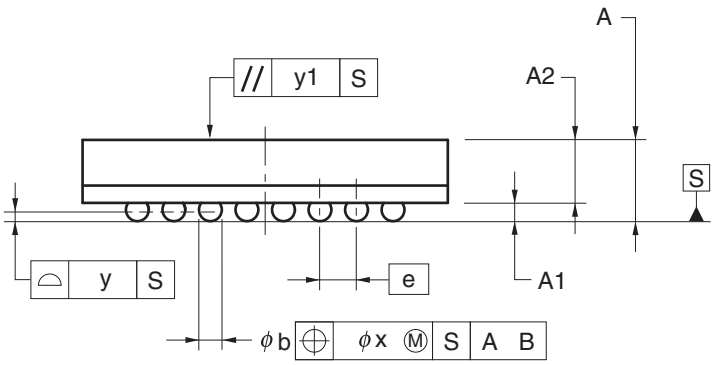

(UNIT:mm)

ITEM	DIMENSIONS
D	4.00±0.10
E	4.00±0.10
w	0.15
A	0.89±0.10
A1	0.20±0.05
A2	0.69
e	0.40
b	0.25±0.05
x	0.05
y	0.08
y1	0.20
ZD	0.60
ZE	0.60

©2012 Renesas Electronics Corporation. All rights reserved.

4.12 80-pin Products

R5F100MFAFA, R5F100MGAFA, R5F100MHAFA, R5F100MJAFA, R5F100MKAFA, R5F100MLAFA
R5F101MFAFA, R5F101MGAFA, R5F101MHAFA, R5F101MJAFA, R5F101MKAFA, R5F101MLAFA
R5F100MFDFA, R5F100MGDFA, R5F100MHDFA, R5F100MJDFA, R5F100MKDFA, R5F100MLDFA
R5F101MFDFA, R5F101MGDFA, R5F101MHDFA, R5F101MJDFA, R5F101MKDFA, R5F101MLDFA
R5F100MFGFA, R5F100MGGFA, R5F100MHGFA, R5F100MJGFA

JEITA Package Code	RENESAS Code	Previous Code	MASS (TYP.) [g]
P-LQFP80-14x14-0.65	PLQP0080JB-E	P80GC-65-UBT-2	0.69

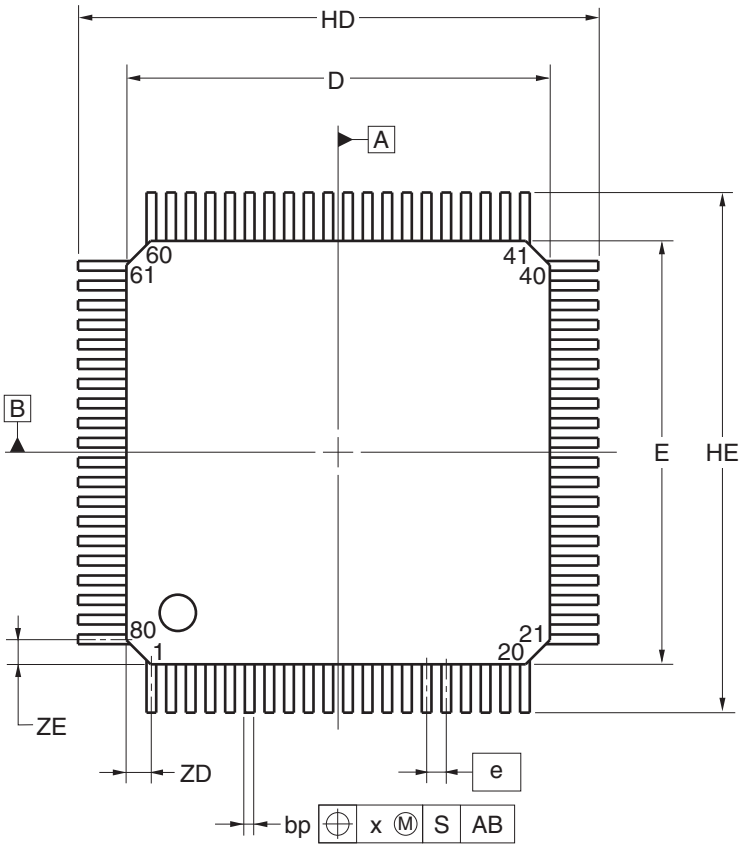

detail of lead end

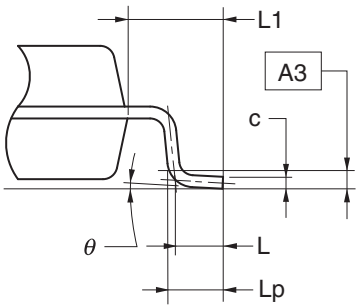

Referance Symbol	Dimension in Millimeters		
	Min	Nom	Max
D	13.80	14.00	14.20
E	13.80	14.00	14.20
HD	17.00	17.20	17.40
HE	17.00	17.20	17.40
A	—	—	1.70
A1	0.05	0.125	0.20
A2	1.35	1.40	1.45
A3	—	0.25	—
bp	0.26	0.32	0.38
c	0.10	0.145	0.20
L	—	0.80	—
Lp	0.736	0.886	1.036
L1	1.40	1.60	1.80
θ	0°	3°	8°
e	—	0.65	—
x	—	—	0.13
y	—	—	0.10
ZD	—	0.825	—
ZE	—	0.825	—

© 2012 Renesas ElectronicsCorporation. All rights reserved.

R5F100MFAFB, R5F100MGAFB, R5F100MHAFB, R5F100MJAFB, R5F100MKAFB, R5F100MLAFB
R5F101MFAFB, R5F101MGAFB, R5F101MHAFB, R5F101MJAFB, R5F101MKAFB, R5F101MLAFB
R5F100MFDFB, R5F100MGDFB, R5F100MHDFB, R5F100MJDFB, R5F100MKDFB, R5F100MLDFB
R5F101MFDFB, R5F101MGDFB, R5F101MHDFB, R5F101MJDFB, R5F101MKDFB, R5F101MLDFB
R5F100MFGFB, R5F100MGGFB, R5F100MHGFB, R5F100MJGFB

JEITA Package Code	RENESAS Code	Previous Code	MASS (TYP.) [g]
P-LFQFP80-12x12-0.50	PLQP0080KE-A	P80GK-50-8EU-2	0.53

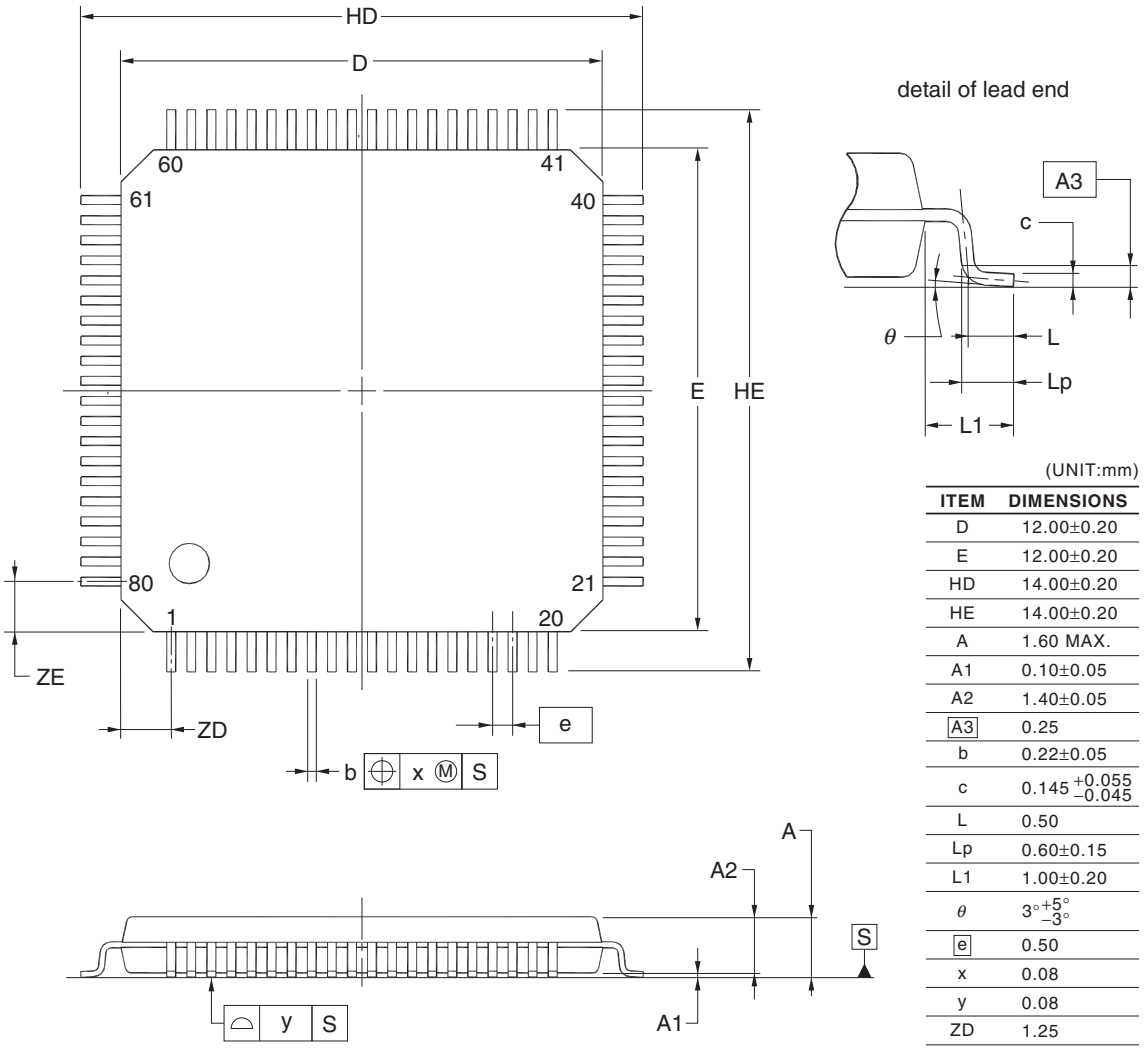

(UNIT:mm)

ITEM	DIMENSIONS
D	12.00±0.20
E	12.00±0.20
HD	14.00±0.20
HE	14.00±0.20
A	1.60 MAX.
A1	0.10±0.05
A2	1.40±0.05
A3	0.25
b	0.22±0.05
c	$0.145^{+0.055}_{-0.045}$
L	0.50
Lp	0.60±0.15
L1	1.00±0.20
θ	$3^{\circ}{}^{+5^{\circ}}_{-3^{\circ}}$
e	0.50
x	0.08
y	0.08
ZD	1.25
ZE	1.25

NOTE
Each lead centerline is located within 0.08 mm of its true position at maximum material condition.

©2012 Renesas Electronics Corporation. All rights reserved.

4.13 100-pin Products

R5F100PFAFB, R5F100PGAFB, R5F100PHAFB, R5F100PJAFB, R5F100PKAFB, R5F100PLAFB
R5F101PFAFB, R5F101PGAFB, R5F101PHAFB, R5F101PJAFB, R5F101PKAFB, R5F101PLAFB
R5F100PFDFB, R5F100PGDFB, R5F100PHDFB, R5F100PJDFB, R5F100PKDFB, R5F100PLDFB
R5F101PFDFB, R5F101PGDFB, R5F101PHDFB, R5F101PJDFB, R5F101PKDFB, R5F101PLDFB
R5F100PFGFB, R5F100PGGFB, R5F100PHGFB, R5F100PJGFB

JEITA Package Code	RENESAS Code	Previous Code	MASS (TYP.) [g]
P-LFQFP100-14x14-0.50	PLQP0100KE-A	P100GC-50-GBR-1	0.69

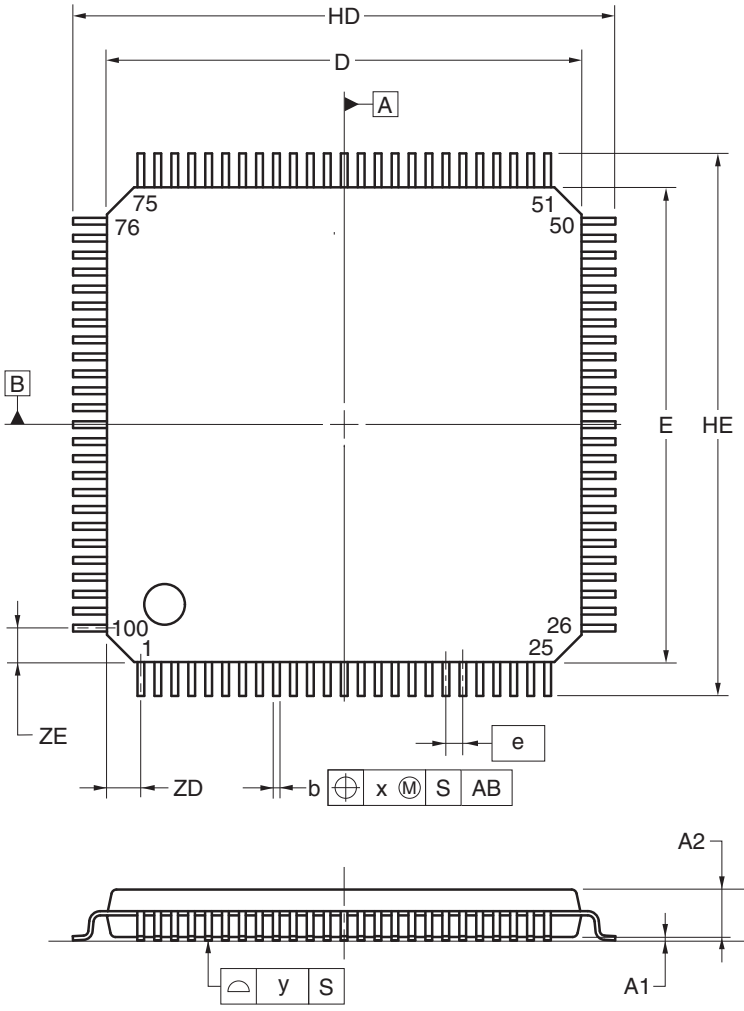

detail of lead end

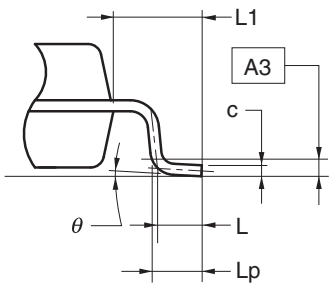

(UNIT:mm)

ITEM	DIMENSIONS
D	14.00±0.20
E	14.00±0.20
HD	16.00±0.20
HE	16.00±0.20
A	1.60 MAX.
A1	0.10±0.05
A2	1.40±0.05
A3	0.25
b	0.22±0.05
c	$0.145^{+0.055}_{-0.045}$
L	0.50
Lp	0.60±0.15
L1	1.00±0.20
θ	$3^{\circ}{}^{+5^{\circ}}_{-3^{\circ}}$
e	0.50
x	0.08
y	0.08
ZD	1.00
ZE	1.00

©2012 Renesas Electronics Corporation. All rights reserved.

R5F100PFAFA, R5F100PGAFA, R5F100PHAFA, R5F100PJAFA, R5F100PKAFA, R5F100PLAFA
R5F101PFAFA, R5F101PGAFA, R5F101PHAFA, R5F101PJAFA, R5F101PKAFA, R5F101PLAFA
R5F100PFDFA, R5F100PGDFA, R5F100PHDFA, R5F100PJDFA, R5F100PKDFA, R5F100PLDFA
R5F101PFDFA, R5F101PGDFA, R5F101PHDFA, R5F101PJDFA, R5F101PKDFA, R5F101PLDFA
R5F100PFGFA, R5F100PGGFA, R5F100PHGFA, R5F100PJGFA

JEITA Package Code	RENESAS Code	Previous Code	MASS (TYP.) [g]
P-LQFP100-14x20-0.65	PLQP0100JC-A	P100GF-65-GBN-1	0.92

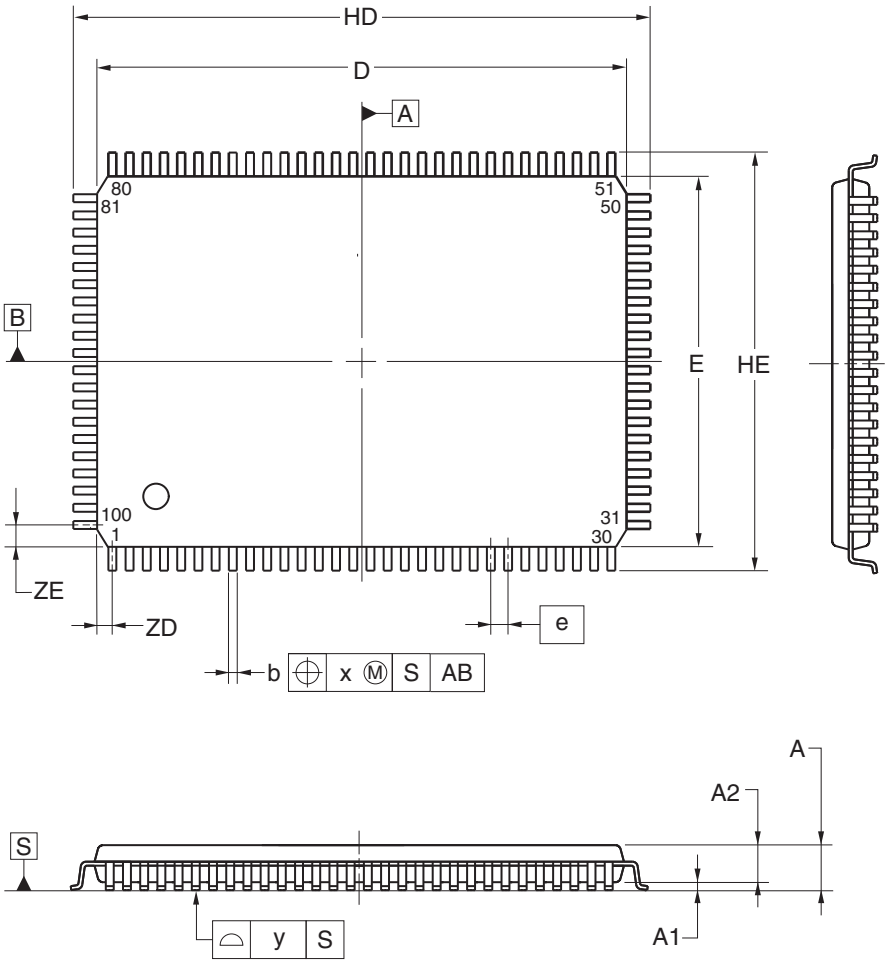

detail of lead end

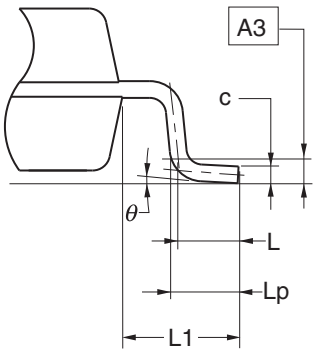

(UNIT:mm)

ITEM	DIMENSIONS
D	20.00±0.20
E	14.00±0.20
HD	22.00±0.20
HE	16.00±0.20
A	1.60 MAX.
A1	0.10±0.05
A2	1.40±0.05
A3	0.25
b	$0.32^{+0.08}_{-0.07}$
c	$0.145^{+0.055}_{-0.045}$
L	0.50
Lp	0.60±0.15
L1	1.00±0.20
θ	$3^{\circ}{}^{+5^{\circ}}_{-3^{\circ}}$
e	0.65
x	0.13
y	0.10
ZD	0.575
ZE	0.825

©2012 Renesas Electronics Corporation. All rights reserved.

4.14 128-pin Products

R5F100SHAFB, R5F100SJAFB, R5F100SKAFB, R5F100SLAFB
R5F101SHAFB, R5F101SJAFB, R5F101SKAFB, R5F101SLAFB
R5F100SHDFB, R5F100SJDFB, R5F100SKDFB, R5F100SLDFB
R5F101SHDFB, R5F101SJDFB, R5F101SKDFB, R5F101SLDFB

JEITA Package Code	RENESAS Code	Previous Code	MASS (TYP.) [g]
P-LFQFP128-14x20-0.50	PLQP0128KD-A	P128GF-50-GBP-1	0.92

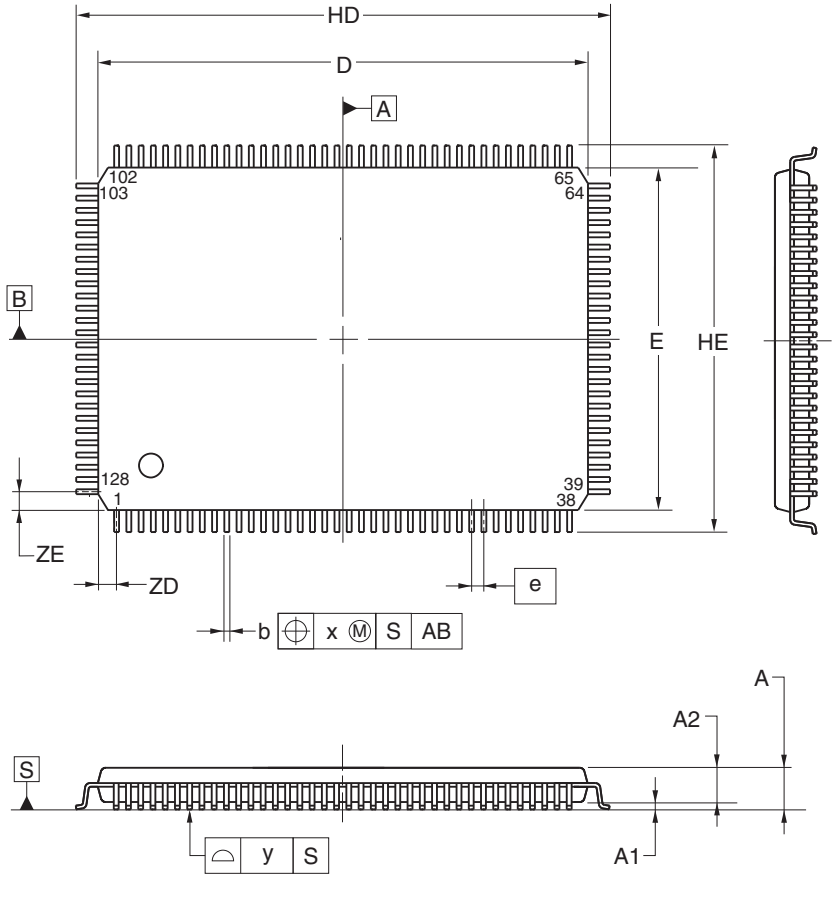

detail of lead end

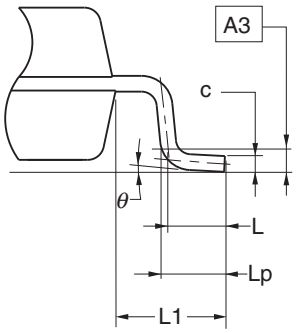

(UNIT:mm)

ITEM	DIMENSIONS
D	20.00±0.20
E	14.00±0.20
HD	22.00±0.20
HE	16.00±0.20
A	1.60 MAX.
A1	0.10±0.05
A2	1.40±0.05
A3	0.25
b	0.22±0.05
c	$0.145^{+0.055}_{-0.045}$
L	0.50
Lp	0.60±0.15
L1	1.00±0.20
θ	$3^{\circ}{}^{+5^{\circ}}_{-3^{\circ}}$
e	0.50
x	0.08
y	0.08
ZD	0.75
ZE	0.75

©2012 Renesas Electronics Corporation. All rights reserved.

Revision History	RL78/G13 Data Sheet

Rev.	Date	Description	
		Page	Summary
1.00	Feb 29, 2012	-	First Edition issued
2.00	Oct 12, 2012	7	Figure 1-1. Part Number, Memory Size, and Package of RL78/G13: Pin count corrected.
		25	1.4 Pin Identification: Description of pins INTP0 to INTP11 corrected.
		40, 42, 44	1.6 Outline of Functions: Descriptions of Subsystem clock, Low-speed on-chip oscillator, and General-purpose register corrected.
		41, 43, 45	1.6 Outline of Functions: Lists of Descriptions changed.
		59, 63, 67	Descriptions of Note 8 in a table corrected.
		68	(4) Common to RL78/G13 all products: Descriptions of Notes corrected.
		69	2.4 AC Characteristics: Symbol of external system clock frequency corrected.
		96 to 98	2.6.1 A/D converter characteristics: Notes of overall error corrected.
		100	2.6.2 Temperature sensor characteristics: Parameter name corrected.
		104	2.8 Flash Memory Programming Characteristics: Incorrect descriptions corrected.
		116	3.10 52-pin products: Package drawings of 52-pin products corrected.
		120	3.12 80-pin products: Package drawings of 80-pin products corrected.
3.00	Aug 02, 2013	1	Modification of 1.1 Features
		3	Modification of 1.2 List of Part Numbers
		4 to 15	Modification of Table 1-1. List of Ordering Part Numbers, note, and caution
		16 to 32	Modification of package type in 1.3.1 to 1.3.14
		33	Modification of description in 1.4 Pin Identification
		48, 50, 52	Modification of caution, table, and note in 1.6 Outline of Functions
		55	Modification of description in table of Absolute Maximum Ratings (T_A = 25°C)
		57	Modification of table, note, caution, and remark in 2.2.1 X1, XT1 oscillator characteristics
		57	Modification of table in 2.2.2 On-chip oscillator characteristics
		58	Modification of note 3 of table (1/5) in 2.3.1 Pin characteristics
		59	Modification of note 3 of table (2/5) in 2.3.1 Pin characteristics
		63	Modification of table in (1) Flash ROM: 16 to 64 KB of 20- to 64-pin products
		64	Modification of notes 1 and 4 in (1) Flash ROM: 16 to 64 KB of 20- to 64-pin products
		65	Modification of table in (1) Flash ROM: 16 to 64 KB of 20- to 64-pin products
		66	Modification of notes 1, 5, and 6 in (1) Flash ROM: 16 to 64 KB of 20- to 64-pin products
		68	Modification of notes 1 and 4 in (2) Flash ROM: 96 to 256 KB of 30- to 100-pin products
		70	Modification of notes 1, 5, and 6 in (2) Flash ROM: 96 to 256 KB of 30- to 100-pin products
		72	Modification of notes 1 and 4 in (3) Flash ROM: 384 to 512 KB of 44- to 100-pin products
		74	Modification of notes 1, 5, and 6 in (3) Flash ROM: 384 to 512 KB of 44- to 100-pin products
		75	Modification of (4) Peripheral Functions (Common to all products)
		77	Modification of table in 2.4 AC Characteristics
		78, 79	Addition of Minimum Instruction Execution Time during Main System Clock Operation
		80	Modification of figures of AC Timing Test Points and External System Clock Timing

Rev.	Date	Description	
		Page	Summary
3.00	Aug 02, 2013	81	Modification of figure of AC Timing Test Points
		81	Modification of description and note 3 in (1) During communication at same potential (UART mode)
		83	Modification of description in (2) During communication at same potential (CSI mode)
		84	Modification of description in (3) During communication at same potential (CSI mode)
		85	Modification of description in (4) During communication at same potential (CSI mode) (1/2)
		86	Modification of description in (4) During communication at same potential (CSI mode) (2/2)
		88	Modification of table in (5) During communication at same potential (simplified I^2C mode) (1/2)
		89	Modification of table and caution in (5) During communication at same potential (simplified I^2C mode) (2/2)
		91	Modification of table and notes 1 and 4 in (6) Communication at different potential (1.8 V, 2.5 V, 3 V) (UART mode) (1/2)
		92, 93	Modification of table and notes 2 to 7 in (6) Communication at different potential (1.8 V, 2.5 V, 3 V) (UART mode) (2/2)
		94	Modification of remarks 1 to 4 in (6) Communication at different potential (1.8 V, 2.5 V, 3 V) (UART mode) (2/2)
		95	Modification of table in (7) Communication at different potential (2.5 V, 3 V) (CSI mode) (1/2)
		96	Modification of table and caution in (7) Communication at different potential (2.5 V, 3 V) (CSI mode) (2/2)
		97	Modification of table in (8) Communication at different potential (1.8 V, 2.5 V, 3 V) (CSI mode) (1/3)
		98	Modification of table, note 1, and caution in (8) Communication at different potential (1.8 V, 2.5 V, 3 V) (CSI mode) (2/3)
		99	Modification of table, note 1, and caution in (8) Communication at different potential (1.8 V, 2.5 V, 3 V) (CSI mode) (3/3)
		100	Modification of remarks 3 and 4 in (8) Communication at different potential (1.8 V, 2.5 V, 3 V) (CSI mode) (3/3)
		102	Modification of table in (9) Communication at different potential (1.8 V, 2.5 V, 3 V) (CSI mode) (1/2)
		103	Modification of table and caution in (9) Communication at different potential (1.8 V, 2.5 V, 3 V) (CSI mode) (2/2)
		106	Modification of table in (10) Communication at different potential (1.8 V, 2.5 V, 3 V) (simplified I^2C mode) (1/2)
		107	Modification of table, note 1, and caution in (10) Communication at different potential (1.8 V, 2.5 V, 3 V) (simplified I^2C mode) (2/2)
		109	Addition of (1) I^2C standard mode
		111	Addition of (2) I^2C fast mode
		112	Addition of (3) I^2C fast mode plus
		112	Modification of IICA serial transfer timing
		113	Addition of table in 2.6.1 A/D converter characteristics
		113	Modification of description in 2.6.1 (1)
		114	Modification of notes 3 to 5 in 2.6.1 (1)
		115	Modification of description and notes 2, 4, and 5 in 2.6.1 (2)
		116	Modification of description and notes 3 and 4 in 2.6.1 (3)
		117	Modification of description and notes 3 and 4 in 2.6.1 (4)

Rev.	Date	Description	
		Page	Summary
3.00	Aug 02, 2013	118	Modification of table in 2.6.2 Temperature sensor/internal reference voltage characteristics
		118	Modification of table and note in 2.6.3 POR circuit characteristics
		119	Modification of table in 2.6.4 LVD circuit characteristics
		120	Modification of table of LVD Detection Voltage of Interrupt & Reset Mode
		120	Renamed to 2.6.5 Power supply voltage rising slope characteristics
		122	Modification of table, figure, and remark in 2.10 Timing Specs for Switching Flash Memory Programming Modes
		123	Modification of caution 1 and description
		124	Modification of table and remark 3 in Absolute Maximum Ratings (T_A = 25°C)
		126	Modification of table, note, caution, and remark in 3.2.1 X1, XT1 oscillator characteristics
		126	Modification of table in 3.2.2 On-chip oscillator characteristics
		127	Modification of note 3 in 3.3.1 Pin characteristics (1/5)
		128	Modification of note 3 in 3.3.1 Pin characteristics (2/5)
		133	Modification of notes 1 and 4 in (1) Flash ROM: 16 to 64 KB of 20- to 64-pin products (1/2)
		135	Modification of notes 1, 5, and 6 in (1) Flash ROM: 16 to 64 KB of 20- to 64-pin products (2/2)
		137	Modification of notes 1 and 4 in (2) Flash ROM: 96 to 256 KB of 30- to 100-pin products (1/2)
		139	Modification of notes 1, 5, and 6 in (2) Flash ROM: 96 to 256 KB of 30- to 100-pin products (2/2)
		140	Modification of (3) Peripheral Functions (Common to all products)
		142	Modification of table in 3.4 AC Characteristics
		143	Addition of Minimum Instruction Execution Time during Main System Clock Operation
		143	Modification of figure of AC Timing Test Points
		143	Modification of figure of External System Clock Timing
		145	Modification of figure of AC Timing Test Points
		145	Modification of description, note 1, and caution in (1) During communication at same potential (UART mode)
		146	Modification of description in (2) During communication at same potential (CSI mode)
		147	Modification of description in (3) During communication at same potential (CSI mode)
		149	Modification of table, note 1, and caution in (4) During communication at same potential (simplified I^2C mode)
		151	Modification of table, note 1, and caution in (5) Communication at different potential (1.8 V, 2.5 V, 3 V) (UART mode) (1/2)
		152 to 154	Modification of table, notes 2 to 6, caution, and remarks 1 to 4 in (5) Communication at different potential (1.8 V, 2.5 V, 3 V) (UART mode) (2/2)
		155	Modification of table in (6) Communication at different potential (1.8 V, 2.5 V, 3 V) (CSI mode) (1/3)
		156	Modification of table and caution in (6) Communication at different potential (1.8 V, 2.5 V, 3 V) (CSI mode) (2/3)
		157, 158	Modification of table, caution, and remarks 3 and 4 in (6) Communication at different potential (1.8 V, 2.5 V, 3 V) (CSI mode) (3/3)
		160, 161	Modification of table and caution in (7) Communication at different potential (1.8 V, 2.5 V, 3 V) (CSI mode)

Rev.	Date	Description	
		Page	Summary
3.00	Aug 02, 2013	163	Modification of table in (8) Communication at different potential (1.8 V, 2.5 V, 3 V) (simplified I^2C mode) (1/2)
		164, 165	Modification of table, note 1, and caution in (8) Communication at different potential (1.8 V, 2.5 V, 3 V) (simplified I^2C mode) (2/2)
		166	Modification of table in 3.5.2 Serial interface IICA
		166	Modification of IICA serial transfer timing
		167	Addition of table in 3.6.1 A/D converter characteristics
		167, 168	Modification of table and notes 3 and 4 in 3.6.1 (1)
		169	Modification of description in 3.6.1 (2)
		170	Modification of description and note 3 in 3.6.1 (3)
		171	Modification of description and notes 3 and 4 in 3.6.1 (4)
		172	Modification of table and note in 3.6.3 POR circuit characteristics
		173	Modification of table of LVD Detection Voltage of Interrupt & Reset Mode
		173	Modification from Supply Voltage Rise Time to 3.6.5 Power supply voltage rising slope characteristics
		174	Modification of 3.9 Dedicated Flash Memory Programmer Communication (UART)
		175	Modification of table, figure, and remark in 3.10 Timing Specs for Switching Flash Memory Programming Modes
3.10	Nov 15, 2013	123	Caution 4 added.
		125	Note for operating ambient temperature in 3.1 Absolute Maximum Ratings deleted.
3.30	Mar 31, 2016		Modification of the position of the index mark in 25-pin plastic WFLGA (3 × 3 mm, 0.50 mm pitch) of 1.3.3 25-pin products
			Modification of power supply voltage in 1.6 Outline of Functions [20-pin, 24-pin, 25-pin, 30-pin, 32-pin, 36-pin products]
			Modification of power supply voltage in 1.6 Outline of Functions [40-pin, 44-pin, 48-pin, 52-pin, 64-pin products]
			Modification of power supply voltage in 1.6 Outline of Functions [80-pin, 100-pin, 128-pin products]
			$\overline{\text{ACK}}$ corrected to ACK
			$\overline{\text{ACK}}$ corrected to ACK

All trademarks and registered trademarks are the property of their respective owners.

SuperFlash is a registered trademark of Silicon Storage Technology, Inc. in several countries including the United States and Japan.

Caution: This product uses SuperFlash® technology licensed from Silicon Storage Technology, Inc.

NOTES FOR CMOS DEVICES

(1) VOLTAGE APPLICATION WAVEFORM AT INPUT PIN: Waveform distortion due to input noise or a reflected wave may cause malfunction. If the input of the CMOS device stays in the area between VIL (MAX) and VIH (MIN) due to noise, etc., the device may malfunction. Take care to prevent chattering noise from entering the device when the input level is fixed, and also in the transition period when the input level passes through the area between VIL (MAX) and VIH (MIN).

(2) HANDLING OF UNUSED INPUT PINS: Unconnected CMOS device inputs can be cause of malfunction. If an input pin is unconnected, it is possible that an internal input level may be generated due to noise, etc., causing malfunction. CMOS devices behave differently than Bipolar or NMOS devices. Input levels of CMOS devices must be fixed high or low by using pull-up or pull-down circuitry. Each unused pin should be connected to VDD or GND via a resistor if there is a possibility that it will be an output pin. All handling related to unused pins must be judged separately for each device and according to related specifications governing the device.

(3) PRECAUTION AGAINST ESD: A strong electric field, when exposed to a MOS device, can cause destruction of the gate oxide and ultimately degrade the device operation. Steps must be taken to stop generation of static electricity as much as possible, and quickly dissipate it when it has occurred. Environmental control must be adequate. When it is dry, a humidifier should be used. It is recommended to avoid using insulators that easily build up static electricity. Semiconductor devices must be stored and transported in an anti-static container, static shielding bag or conductive material. All test and measurement tools including work benches and floors should be grounded. The operator should be grounded using a wrist strap. Semiconductor devices must not be touched with bare hands. Similar precautions need to be taken for PW boards with mounted semiconductor devices.

(4) STATUS BEFORE INITIALIZATION: Power-on does not necessarily define the initial status of a MOS device. Immediately after the power source is turned ON, devices with reset functions have not yet been initialized. Hence, power-on does not guarantee output pin levels, I/O settings or contents of registers. A device is not initialized until the reset signal is received. A reset operation must be executed immediately after power-on for devices with reset functions.

(5) POWER ON/OFF SEQUENCE: In the case of a device that uses different power supplies for the internal operation and external interface, as a rule, switch on the external power supply after switching on the internal power supply. When switching the power supply off, as a rule, switch off the external power supply and then the internal power supply. Use of the reverse power on/off sequences may result in the application of an overvoltage to the internal elements of the device, causing malfunction and degradation of internal elements due to the passage of an abnormal current. The correct power on/off sequence must be judged separately for each device and according to related specifications governing the device.

(6) INPUT OF SIGNAL DURING POWER OFF STATE : Do not input signals or an I/O pull-up power supply while the device is not powered. The current injection that results from input of such a signal or I/O pull-up power supply may cause malfunction and the abnormal current that passes in the device at this time may cause degradation of internal elements. Input of signals during the power off state must be judged separately for each device and according to related specifications governing the device.

Notice

1. Descriptions of circuits, software and other related information in this document are provided only to illustrate the operation of semiconductor products and application examples. You are fully responsible for the incorporation of these circuits, software, and information in the design of your equipment. Renesas Electronics assumes no responsibility for any losses incurred by you or third parties arising from the use of these circuits, software, or information.
2. Renesas Electronics has used reasonable care in preparing the information included in this document, but Renesas Electronics does not warrant that such information is error free. Renesas Electronics assumes no liability whatsoever for any damages incurred by you resulting from errors in or omissions from the information included herein.
3. Renesas Electronics does not assume any liability for infringement of patents, copyrights, or other intellectual property rights of third parties by or arising from the use of Renesas Electronics products or technical information described in this document. No license, express, implied or otherwise, is granted hereby under any patents, copyrights or other intellectual property rights of Renesas Electronics or others.
4. You should not alter, modify, copy, or otherwise misappropriate any Renesas Electronics product, whether in whole or in part. Renesas Electronics assumes no responsibility for any losses incurred by you or third parties arising from such alteration, modification, copy or otherwise misappropriation of Renesas Electronics product.
5. Renesas Electronics products are classified according to the following two quality grades: "Standard" and "High Quality". The recommended applications for each Renesas Electronics product depends on the product's quality grade, as indicated below.
   "Standard": Computers; office equipment; communications equipment; test and measurement equipment; audio and visual equipment; home electronic appliances; machine tools; personal electronic equipment; and industrial robots etc.
   "High Quality": Transportation equipment (automobiles, trains, ships, etc.); traffic control systems; anti-disaster systems; anti-crime systems; and safety equipment etc.
   Renesas Electronics products are neither intended nor authorized for use in products or systems that may pose a direct threat to human life or bodily injury (artificial life support devices or systems, surgical implantations etc.), or may cause serious property damages (nuclear reactor control systems, military equipment etc.). You must check the quality grade of each Renesas Electronics product before using it in a particular application. You may not use any Renesas Electronics product for any application for which it is not intended. Renesas Electronics shall not be in any way liable for any damages or losses incurred by you or third parties arising from the use of any Renesas Electronics product for which the product is not intended by Renesas Electronics.
6. You should use the Renesas Electronics products described in this document within the range specified by Renesas Electronics, especially with respect to the maximum rating, operating supply voltage range, movement power voltage range, heat radiation characteristics, installation and other product characteristics. Renesas Electronics shall have no liability for malfunctions or damages arising out of the use of Renesas Electronics products beyond such specified ranges.
7. Although Renesas Electronics endeavors to improve the quality and reliability of its products, semiconductor products have specific characteristics such as the occurrence of failure at a certain rate and malfunctions under certain use conditions. Further, Renesas Electronics products are not subject to radiation resistance design. Please be sure to implement safety measures to guard them against the possibility of physical injury, and injury or damage caused by fire in the event of the failure of a Renesas Electronics product, such as safety design for hardware and software including but not limited to redundancy, fire control and malfunction prevention, appropriate treatment for aging degradation or any other appropriate measures. Because the evaluation of microcomputer software alone is very difficult, please evaluate the safety of the final products or systems manufactured by you.
8. Please contact a Renesas Electronics sales office for details as to environmental matters such as the environmental compatibility of each Renesas Electronics product. Please use Renesas Electronics products in compliance with all applicable laws and regulations that regulate the inclusion or use of controlled substances, including without limitation, the EU RoHS Directive. Renesas Electronics assumes no liability for damages or losses occurring as a result of your noncompliance with applicable laws and regulations.
9. Renesas Electronics products and technology may not be used for or incorporated into any products or systems whose manufacture, use, or sale is prohibited under any applicable domestic or foreign laws or regulations. You should not use Renesas Electronics products or technology described in this document for any purpose relating to military applications or use by the military, including but not limited to the development of weapons of mass destruction. When exporting the Renesas Electronics products or technology described in this document, you should comply with the applicable export control laws and regulations and follow the procedures required by such laws and regulations.
10. It is the responsibility of the buyer or distributor of Renesas Electronics products, who distributes, disposes of, or otherwise places the product with a third party, to notify such third party in advance of the contents and conditions set forth in this document, Renesas Electronics assumes no responsibility for any losses incurred by you or third parties as a result of unauthorized use of Renesas Electronics products.
11. This document may not be reproduced or duplicated in any form, in whole or in part, without prior written consent of Renesas Electronics.
12. Please contact a Renesas Electronics sales office if you have any questions regarding the information contained in this document or Renesas Electronics products, or if you have any other inquiries.

(Note 1) "Renesas Electronics" as used in this document means Renesas Electronics Corporation and also includes its majority-owned subsidiaries.

(Note 2) "Renesas Electronics product(s)" means any product developed or manufactured by or for Renesas Electronics.

RENESAS

SALES OFFICES

Renesas Electronics Corporation

http://www.renesas.com

Refer to "http://www.renesas.com/" for the latest and detailed information.

California Eastern Laboratories, Inc.
4590 Patrick Henry Drive, Santa Clara, California 95054-1817, U.S.A.
Tel: +1-408-919-2500, Fax: +1-408-988-0279

Renesas Electronics Europe Limited
Dukes Meadow, Millboard Road, Bourne End, Buckinghamshire, SL8 5FH, U.K
Tel: +44-1628-585-100, Fax: +44-1628-585-900

Renesas Electronics Europe GmbH
Arcadiastrasse 10, 40472 Düsseldorf, Germany
Tel: +49-211-6503-0, Fax: +49-211-6503-1327

Renesas Electronics (China) Co., Ltd.
Room 1709, Quantum Plaza, No.27 ZhiChunLu Haidian District, Beijing 100191, P.R.China
Tel: +86-10-8235-1155, Fax: +86-10-8235-7679

Renesas Electronics (Shanghai) Co., Ltd.
Unit 301, Tower A, Central Towers, 555 Langao Road, Putuo District, Shanghai, P. R. China 200333
Tel: +86-21-2226-0888, Fax: +86-21-2226-0999

Renesas Electronics Hong Kong Limited
Unit 1601-1611, 16/F., Tower 2, Grand Century Place, 193 Prince Edward Road West, Mongkok, Kowloon, Hong Kong
Tel: +852-2265-6688, Fax: +852 2886-9022

Renesas Electronics Taiwan Co., Ltd.
13F, No. 363, Fu Shing North Road, Taipei 10543, Taiwan
Tel: +886-2-8175-9600, Fax: +886 2-8175-9670

Renesas Electronics Singapore Pte. Ltd.
80 Bendemeer Road, Unit #06-02 Hyflux Innovation Centre, Singapore 339949
Tel: +65-6213-0200, Fax: +65-6213-0300

Renesas Electronics Malaysia Sdn.Bhd.
Unit 1207, Block B, Menara Amcorp, Amcorp Trade Centre, No. 18, Jln Persiaran Barat, 46050 Petaling Jaya, Selangor Darul Ehsan, Malaysia
Tel: +60-3-7955-9390, Fax: +60-3-7955-9510

Renesas Electronics India Pvt. Ltd.
No.777C, 100 Feet Road, HAL II Stage, Indiranagar, Bangalore, India
Tel: +91-80-67208700, Fax: +91-80-67208777

Renesas Electronics Korea Co., Ltd.
12F., 234 Teheran-ro, Gangnam-Gu, Seoul, 135-080, Korea
Tel: +82-2-558-3737, Fax: +82-2-558-5141

© 2016 Renesas Electronics Corporation. All rights reserved.

Colophon 5.0