[24V IN] → [Protection] → [Power Tree]

[ESP32 DEV KIT]
  | I2C
  | SPI
  | GPIO
  | UART

[CARD EDGE]
  ↓
[PCB-B]
 Motors
 Sensors
 Relays

Setting	Value
Layers	4
Thickness	1.6mm
Copper	2oz outer / 1oz inner
Finish	ENIG

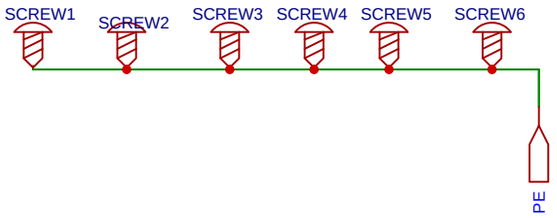

Schematic	Schematic1	Create at	2026-01-21
		Update at	2026-01-29
Board	Board1	Page	SYSTEM OVERVIEW
Drawn		MV2	
Reviewed			
		Version	Size
EasyEDA		V1.0	A4

Page 1 Total 7

EasyEDA.com

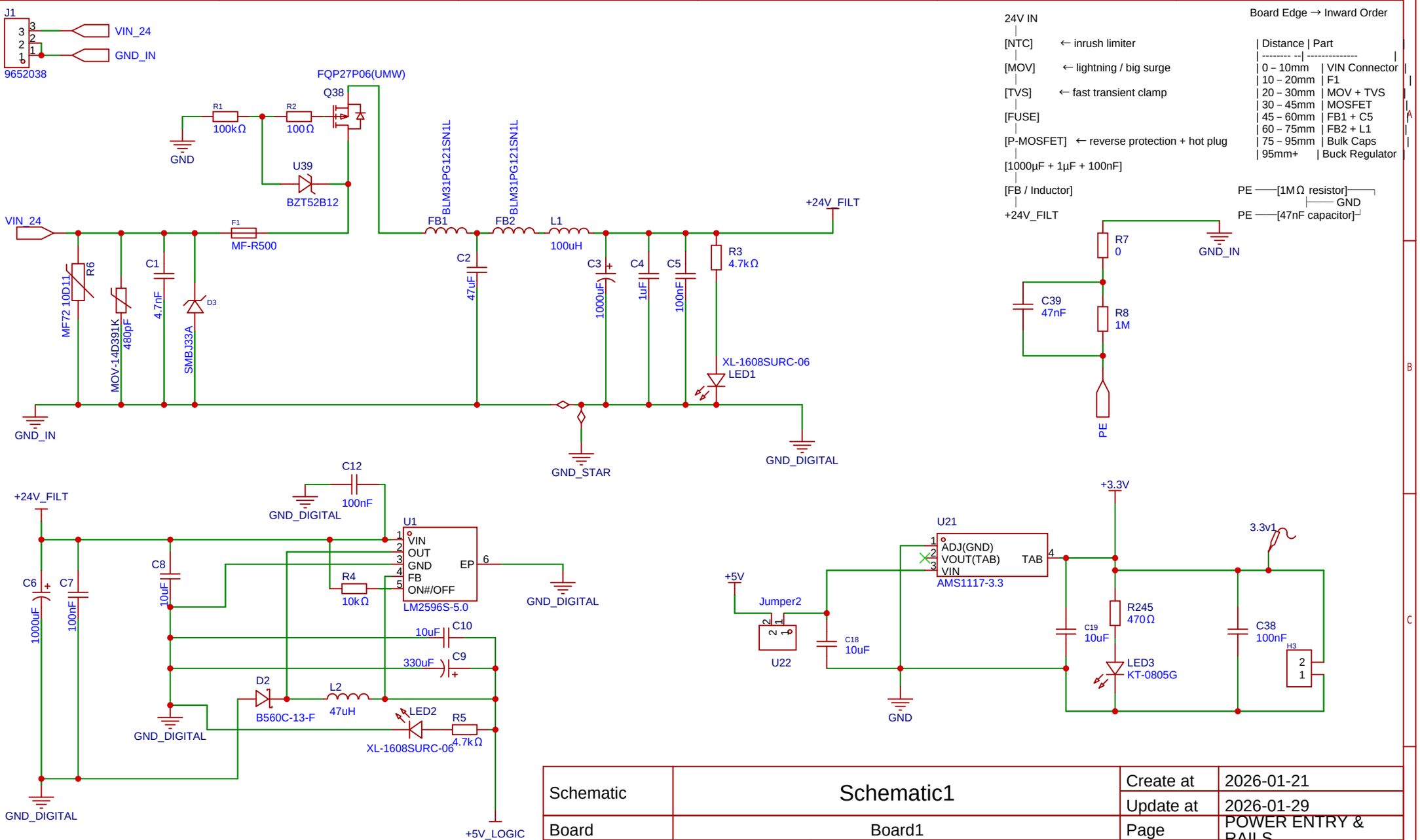

Schematic	Schematic1	Create at	2026-01-21
		Update at	2026-01-29
Board	Board1	Page	POWER ENTRY & RAILS
Drawn		MV2	
Reviewed			
		Version	Size	Page 2 Total 7
EasyEDA		V1.0	A4	EasyEDA.com

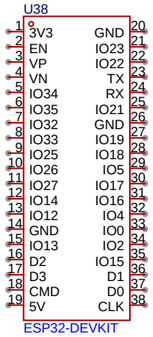

SR_DATA
SR_CLK
SR_LATCH
MOTOR_EN

PCB-B ID REGISTER (74HC165)
PCB_ID_DATA
PCB_ID_LATCH
PCB_ID_LATCH

FEEDBACK SYSTEM
SPI_CLK
SPI_MOSI
SPI_MISO
MCP3208_CS

2-PIN MOTORS (COMPARATOR – LM393
FB_ODD
FB_EVEN

FEEDBACK MODE CONTROL
FB_MODE_SEL

SENSOR INPUT
SENSOR_DATA

OLED DISPLAY (I2C)
I2C_SDA
I2C_SCL

USER INTERFACE
BUZZER
RGB_PWM

MODE SWITCHES
MODE_SW
FUNC_SW

TEMPERATURE / AUX
TEMP_SENSE

RELAY / FAN CONTROL
FAN_CTRL
FRIDGE_CTRL

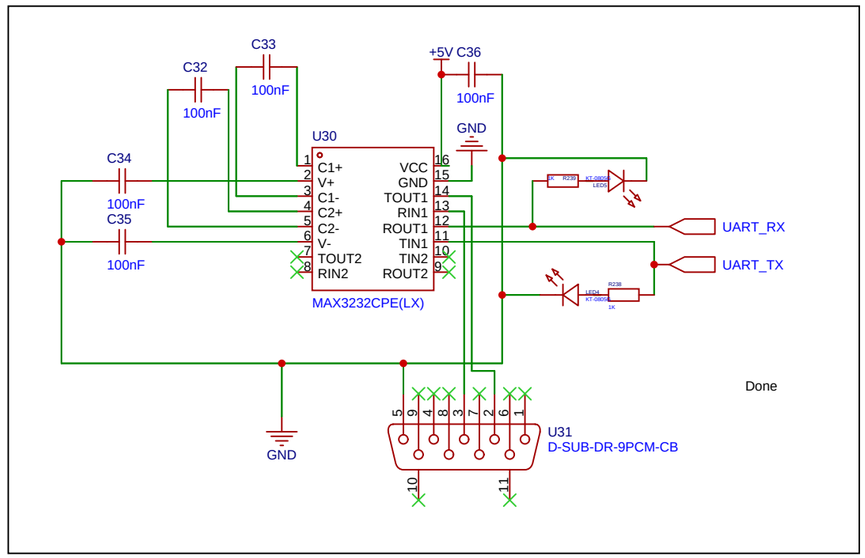

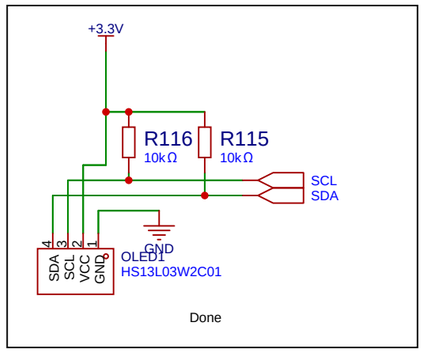

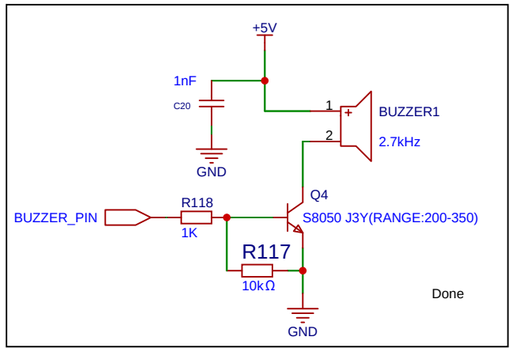

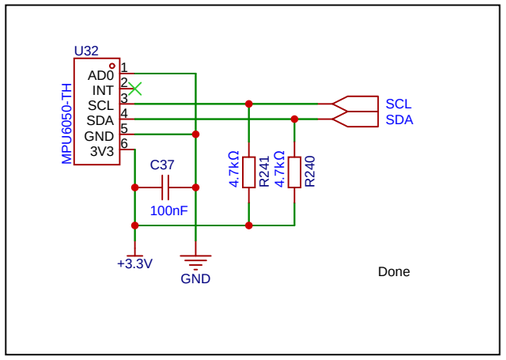

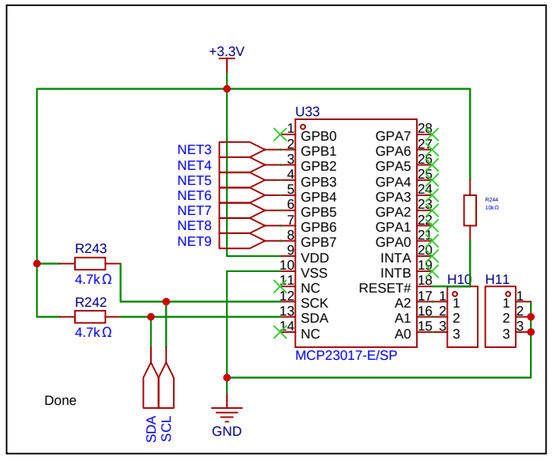

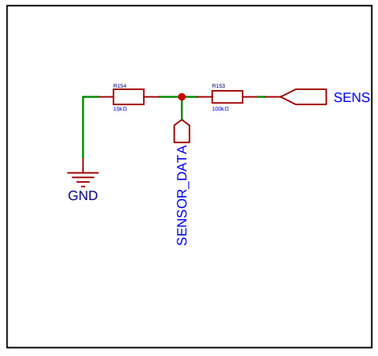

Schematic	Schematic1	Create at	2026-01-21
		Update at	2026-01-27
Board	Board1	Page	ESP32 DEV KIT INTERFACE
Drawn		MV2	
Reviewed			
		Version	Size / Page 3 Total 7
EasyEDA		V1.0	A4 / EasyEDA.com

Schematic	Schematic1	Create at	2026-01-20
		Update at	2026-01-21
Board	Board1	Page	PCB-B TYPE IDENTIFICATION
Drawn		MV2	
Reviewed			
		Version	Size	Page 4 Total 7
EasyEDA		V1.0	A4	EasyEDA.com

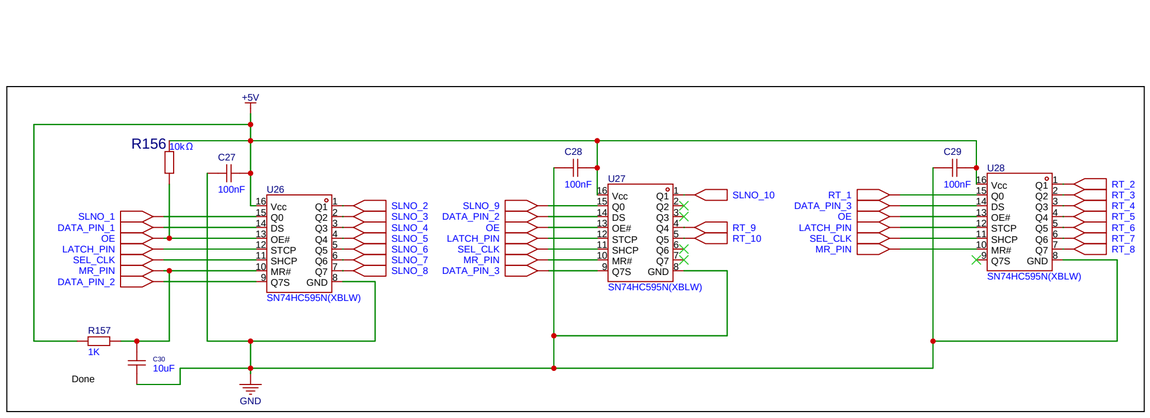

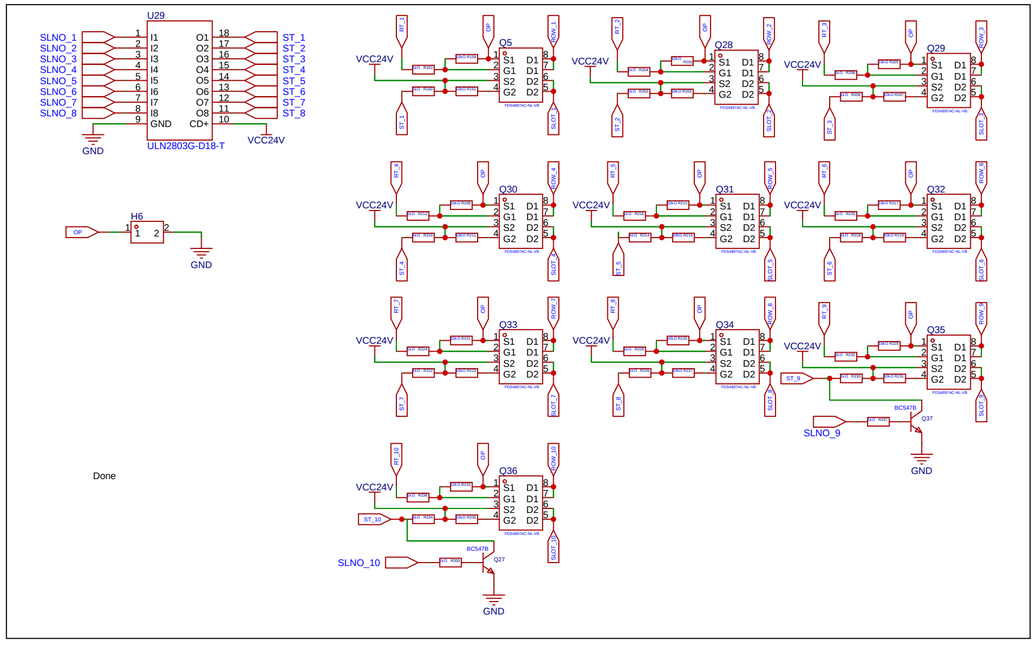

Schematic	Schematic1	Create at	2026-01-21
		Update at	2026-01-27
Board	Board1	Page	MOTOR CONTROL LOGIC
Drawn		MV2	
Reviewed			
		Version	Size	Page 5 Total 7
EasyEDA		V1.0	A4	EasyEDA.com

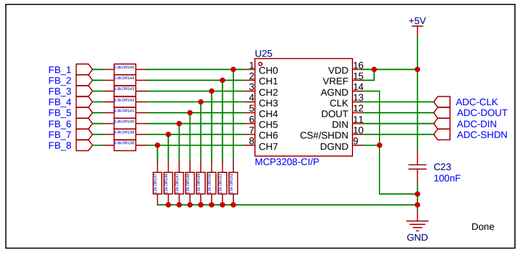

Schematic	Schematic1	Create at	2026-01-21
		Update at	2026-01-27
Board	Board1	Page	FEEDBACK SYSTEM
Drawn		MV2	
Reviewed			
	Version	Size	Page 6 Total 7
EasyEDA	V1.0	A4	EasyEDA.com

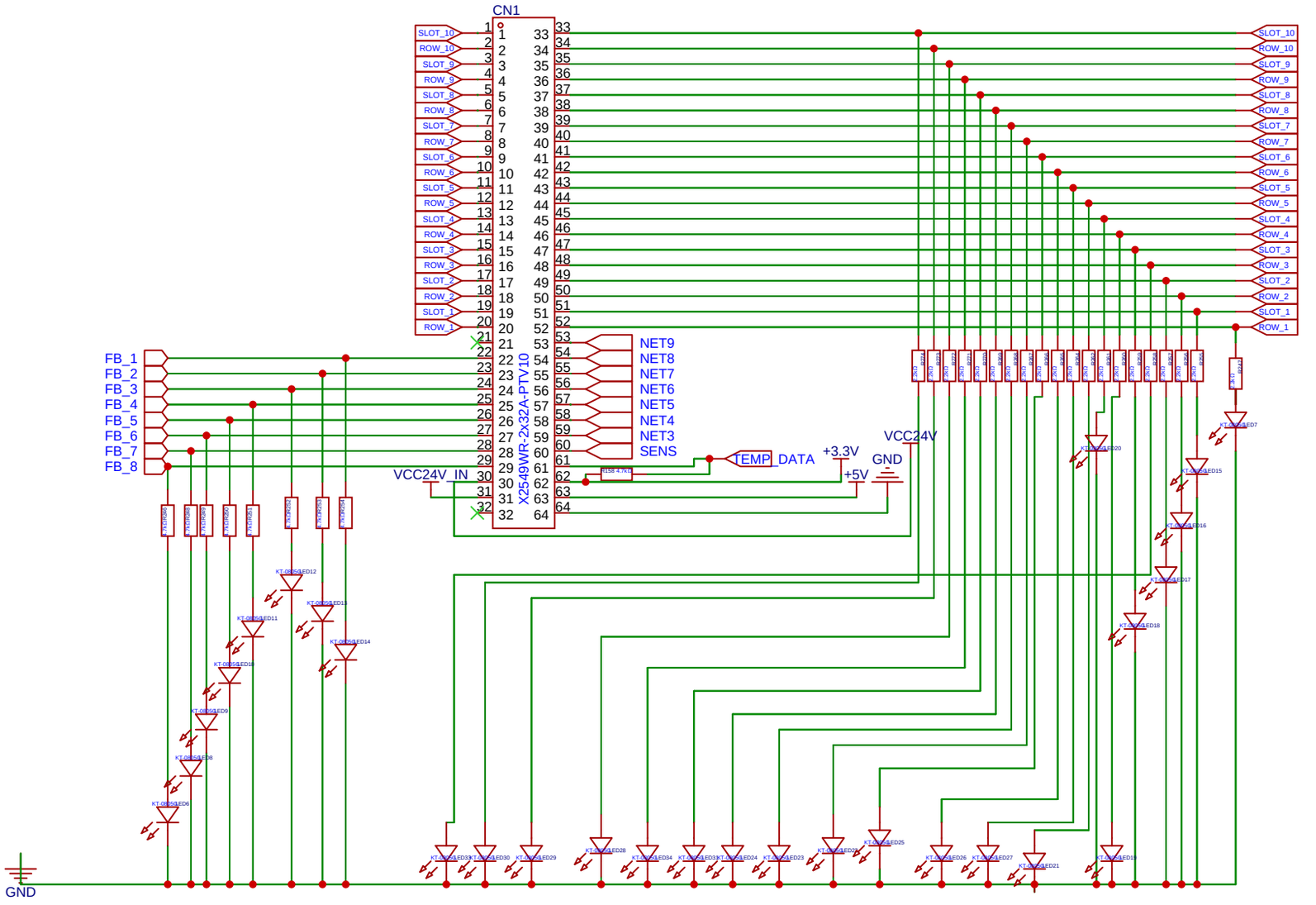

Done

Schematic	Schematic1	Create at	2026-01-21
		Update at	2026-01-27
Board	Board1	Page	CARD EDGE CONNECTOR
Drawn			
Reviewed			
		MV2	
		Version	Size	Page 7 Total 7
EasyEDA		V1.0	A4	EasyEDA.com