[24V IN] → [Protection] → [Power Tree]

[ESP32 DEV KIT]
  | I2C
  | SPI
  | GPIO
  | UART

[CARD EDGE]
  ↓
[PCB-B]
 Motors
 Sensors
 Relays

Setting	Value
Layers	4
Thickness	1.6mm
Copper	2oz outer / 1oz inner
Finish	ENIG

Schematic	Schematic1	Create at	2026-01-21
		Update at	2026-01-23
Board	Board1	Page	SYSTEM OVERVIEW
Drawn		MV2	
Reviewed			
		Version	Size / Page 1 Total 7
EasyEDA		V1.0	A4 / EasyEDA.com

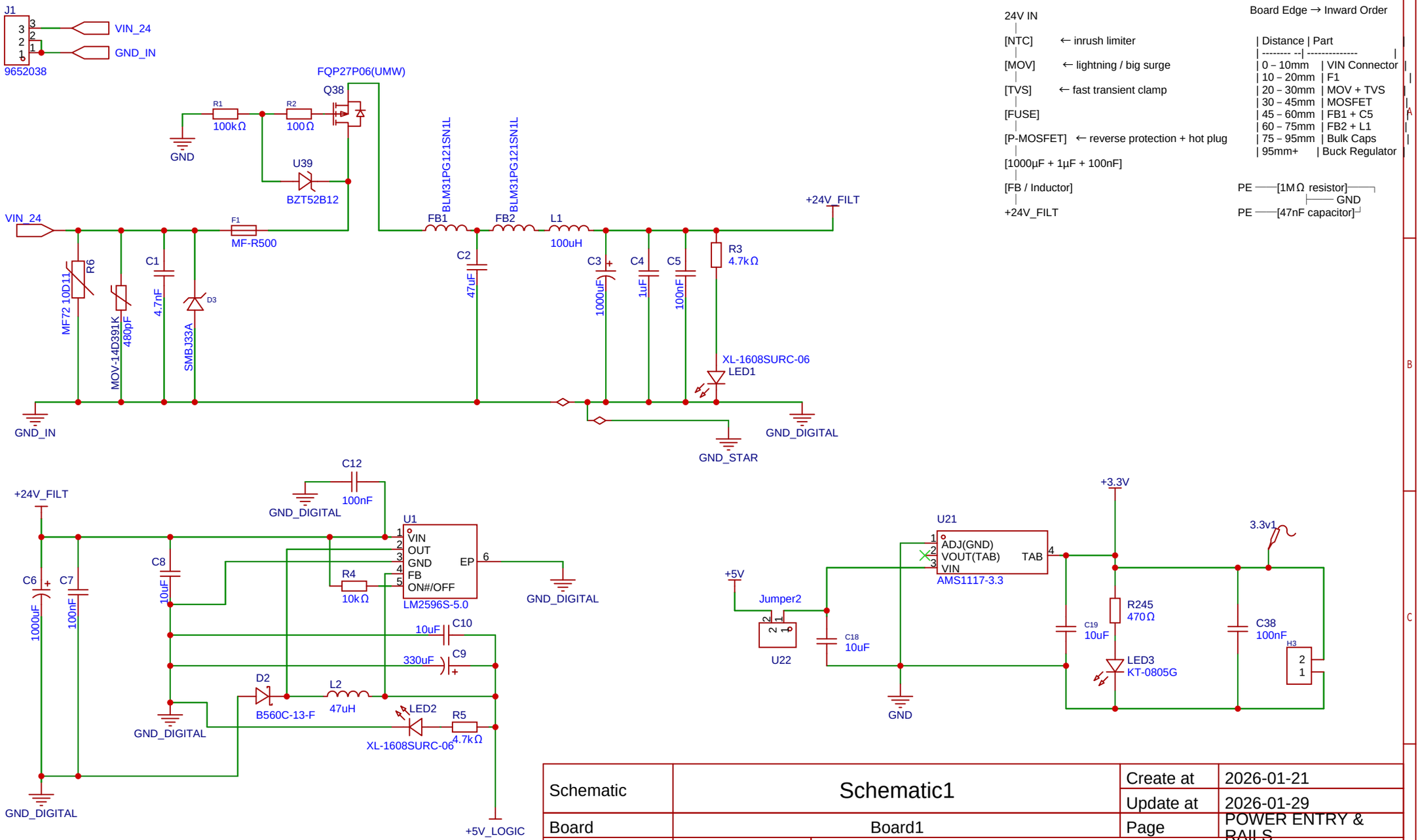

24V IN
|
[NTC] ← inrush limiter
|
[MOV] ← lightning / big surge
|
[TVS] ← fast transient clamp
|
[FUSE]
|
[P-MOSFET] ← reverse protection + hot plug
|
[1000µF + 1µF + 100nF]
|
[FB / Inductor]
|
+24V_FILT

Board Edge → Inward Order

Distance	Part
0 – 10mm	VIN Connector
10 – 20mm	F1
20 – 30mm	MOV + TVS
30 – 45mm	MOSFET
45 – 60mm	FB1 + C5
60 – 75mm	FB2 + L1
75 – 95mm	Bulk Caps
95mm+	Buck Regulator

PE ──[1MΩ resistor]──┐
├── GND
PE ──[47nF capacitor]┘

Schematic	Schematic1	Create at	2026-01-21
		Update at	2026-01-29
Board	Board1	Page	POWER ENTRY & RAILS
Drawn		MV2	
Reviewed			
		Version	Size	Page 2 Total 7
EasyEDA		V1.0	A4	EasyEDA.com

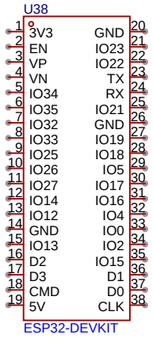

SR_DATA
SR_CLK
SR_LATCH
MOTOR_EN

PCB-B ID REGISTER (74HC165)
PCB_ID_DATA
PCB_ID_LATCH
PCB_ID_LATCH

FEEDBACK SYSTEM
SPI_CLK
SPI_MOSI
SPI_MISO
MCP3208_CS

2-PIN MOTORS (COMPARATOR – LM393
FB_ODD
FB_EVEN

FEEDBACK MODE CONTROL
FB_MODE_SEL

SENSOR INPUT
SENSOR_DATA

OLED DISPLAY (I2C)
I2C_SDA
I2C_SCL

USER INTERFACE
BUZZER
RGB_PWM

MODE SWITCHES
MODE_SW
FUNC_SW

TEMPERATURE / AUX
TEMP_SENSE

RELAY / FAN CONTROL
FAN_CTRL
FRIDGE_CTRL

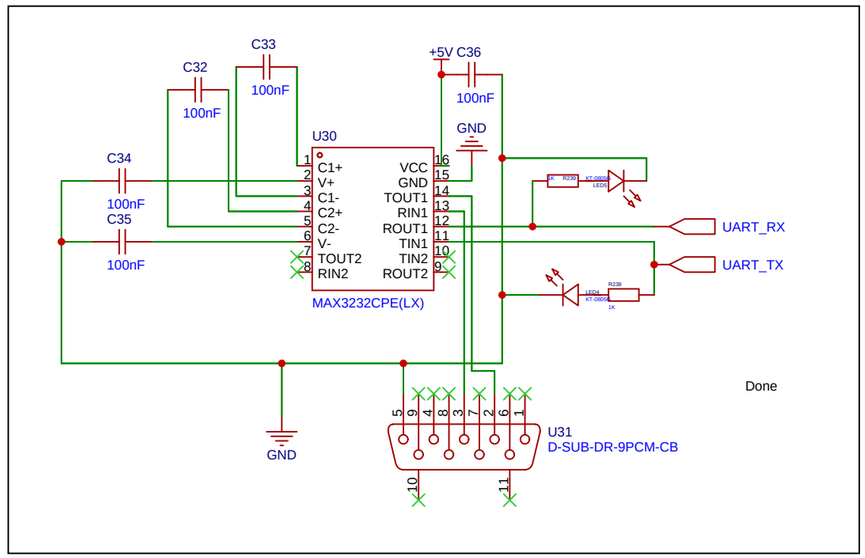

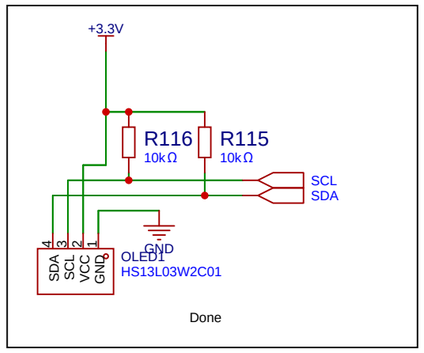

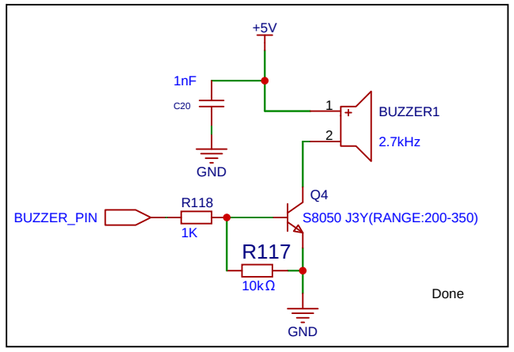

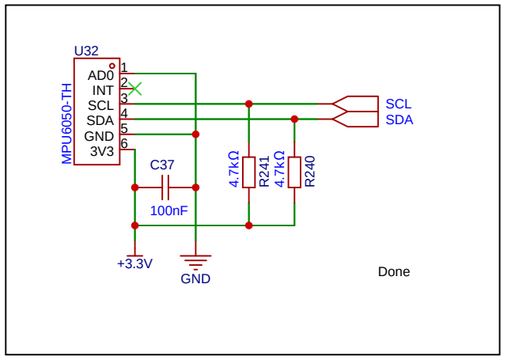

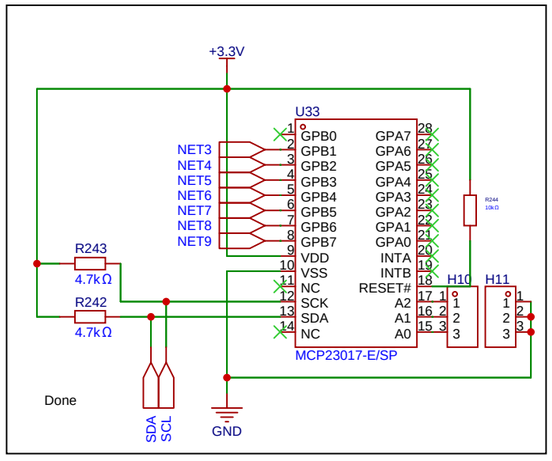

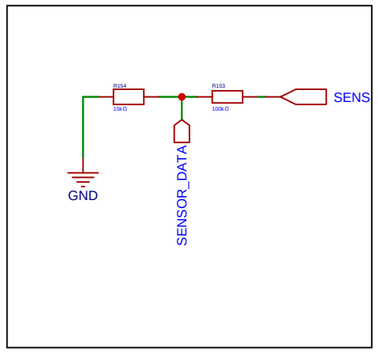

Schematic	Schematic1	Create at	2026-01-21
		Update at	2026-01-27
Board	Board1	Page	ESP32 DEV KIT INTERFACE
Drawn		MV2	
Reviewed			
		Version	Size / Page 3 Total 7
EasyEDA		V1.0	A4 / EasyEDA.com

Schematic	Schematic1	Create at	2026-01-20
		Update at	2026-01-21
Board	Board1	Page	PCB-B TYPE IDENTIFICATION
Drawn		MV2	
Reviewed			
		Version	Size	Page 4 Total 7
EasyEDA		V1.0	A4	EasyEDA.com

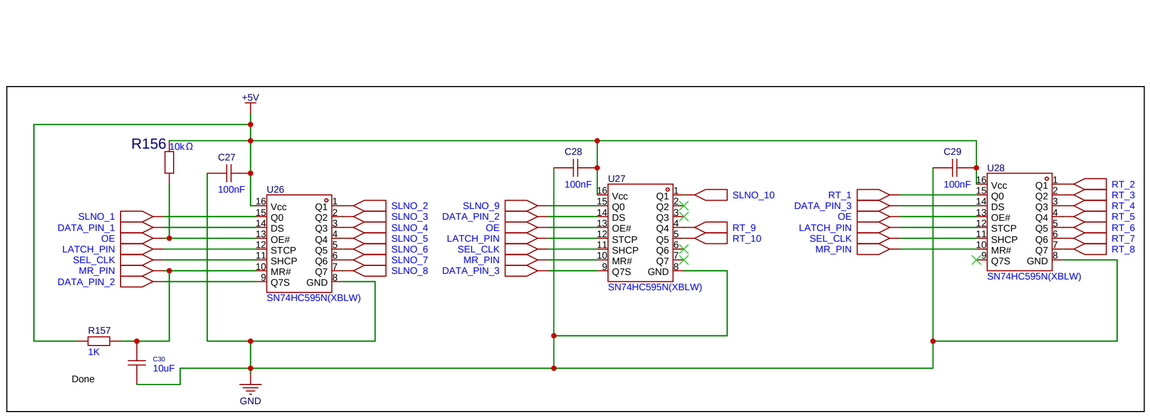

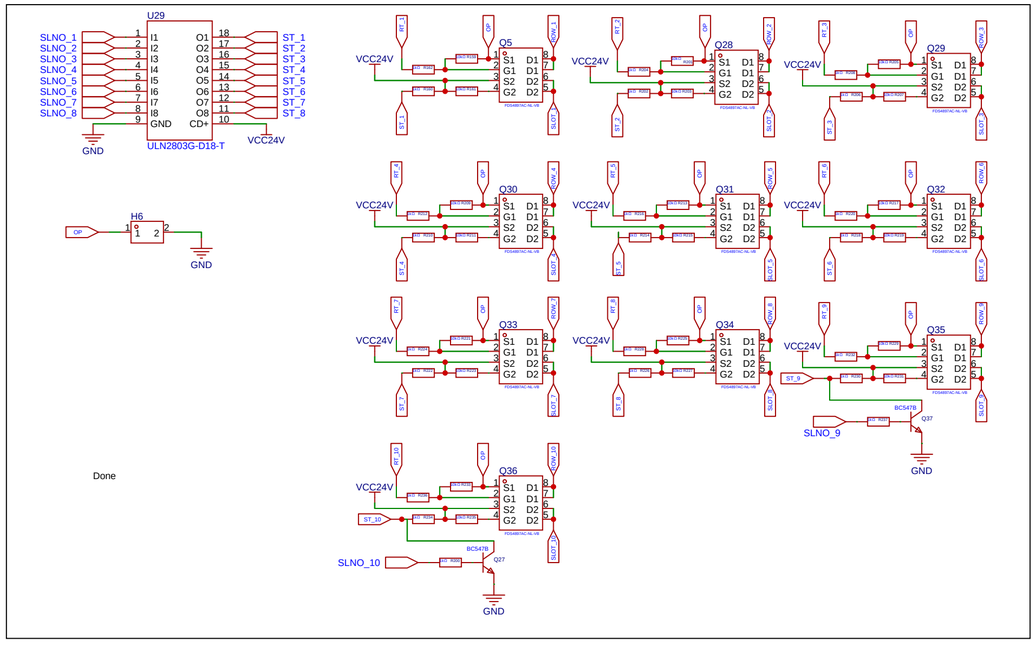

Schematic	Schematic1	Create at	2026-01-21
		Update at	2026-01-27
Board	Board1	Page	MOTOR CONTROL LOGIC
Drawn		MV2	
Reviewed			
		Version	Size	Page 5 Total 7
EasyEDA		V1.0	A4	EasyEDA.com

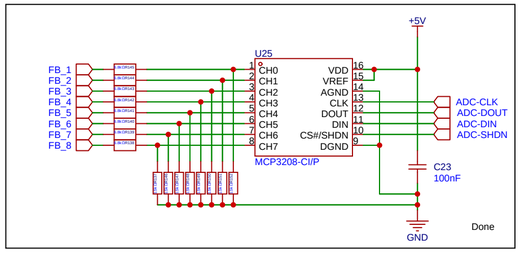

Schematic	Schematic1	Create at	2026-01-21
		Update at	2026-01-27
Board	Board1	Page	FEEDBACK SYSTEM
Drawn		MV2	
Reviewed			
	Version	Size	Page 6 Total 7
EasyEDA	V1.0	A4	EasyEDA.com

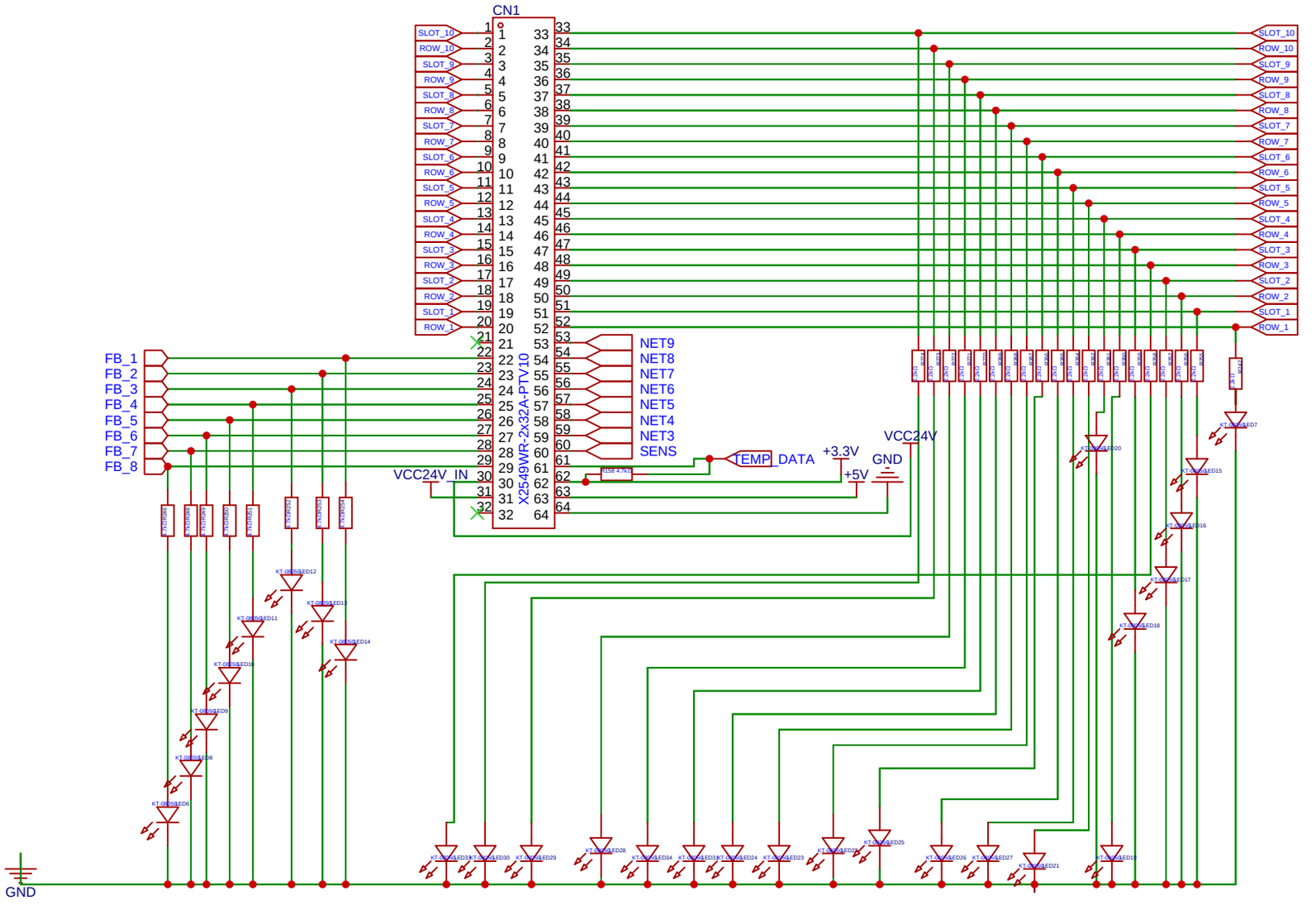

Done

Schematic	Schematic1	Create at	2026-01-21
		Update at	2026-01-27
Board	Board1	Page	CARD EDGE CONNECTOR
Drawn			
Reviewed			
		MV2	
		Version	Size	Page 7 Total 7
EasyEDA		V1.0	A4	EasyEDA.com