ICT Express 12 (2026) 530–535

Contents lists available at ScienceDirect

ICT Express

journal homepage: www.elsevier.com/locate/icte

Model-driven learning for OTFS detection based on an enhanced GNN with prior information

Da Liu, Congbo Wang, Jingbo Zhang *, Kai Su

College of Information Science and Technology, Dalian Maritime University, Dalian, China

ARTICLE INFO

Keywords:
Orthogonal time frequency space (OTFS)
Edge messages
Prior information
Model-driven
Graph neural network (GNN)

ABSTRACT

Orthogonal Time Frequency Space (OTFS), characterized by its unique time-frequency orthogonality, has demonstrated significant advantages in overcoming the difficulties caused by time-varying channels in wireless communications. To realize the full capabilities of OTFS, designing an efficient signal detector is crucial. Traditional detectors often fail to perform adequately under complex channel conditions. Therefore, Graph Neural Networks (GNNs), known for their powerful feature representation and generalization capabilities, have been introduced for OTFS signal detection. However, conventional GNN-based detectors do not effectively utilize prior information and edge features. To address this, we propose a Prior Information-Enhanced GNN (PI-EGNN) detector, which improves signal estimation by integrating prior information and fully leveraging edge attributes. Additionally, a linear attention mechanism is introduced to further enhance the overall network performance. Simulation results demonstrate that, compared to state-of-the-art detectors, the proposed PI-EGNN detector shows improved performance.

1. Introduction

An emerging trend in future communications is the need for reliable connectivity in high-mobility scenarios [1,2]. However, the Doppler effect severely degrades the performance of Orthogonal Frequency Division Multiplexing (OFDM). To mitigate this issue, Orthogonal Time Frequency Space (OTFS) modulation has been proposed, which modulates symbols in the delay-Doppler (DD) domain [3,4]. By transforming the time-varying channel in the time-frequency (TF) domain into a stationary channel in the DD domain, OTFS enhances system robustness to interference and improves communication stability. As a result, OTFS is regarded as one of the most promising technologies for future wireless communication systems.

To fully exploit the advantages of OTFS modulation in wireless communications, various detectors have been developed [5–13]. However, traditional detectors often suffer from either limited performance due to their simplicity or excessive computational complexity, rendering them impractical for real-world applications. Consequently, numerous deep learning-based intelligent detectors have been proposed to achieve superior detection performance [14–19].

Deep learning-based detectors can be broadly classified into data-driven [14,15] and model-driven [16,17] approaches. In data-driven methods, large amounts of data are used to approximate the relationship between the detection output and the system input. In contrast, model-driven methods construct neural networks based on the underlying algorithms themselves, providing greater interpretability. Graph Neural Networks (GNNs) were initially introduced to address the signal detection problem in OFDM systems [18]. The authors in [20] integrated traditional signal detection algorithms with GNNs to enhance detection capability. GNNs were first applied to OTFS to fully exploit the structural features of the data in [21]. Furthermore, Approximate Message Passing (AMP) is unfolded and integrated with GNN in [22], which, to the best of the authors' knowledge, achieves the best performance among message-passing-based detectors. However, in AMP-GNN, the prior information of the transmitted symbols is not explicitly extracted and injected as learnable node features, and the edge information is determined only by the channel and kept static during message passing, which may limit further performance improvement. These limitations motivate the improvements proposed in this work.

In this letter, we propose a Prior Information-Enhanced GNN (PI-EGNN) detector to improve the detection capability of OTFS systems. In PI-EGNN, prior information is leveraged to enrich node features, while edge features are integrated into the message passing to better distill the propagated information. Furthermore, linear attention from Linformer [23] is introduced to strengthen the feature representation of relationships between node messages, thereby enhancing the detector's performance. Simulation results validate the effectiveness of the proposed method. Our contributions are summarized as follows:

* Corresponding author.
E-mail addresses: daliu@dlmu.edu.cn (D. Liu), wcbdlmu137@163.com (C. Wang), zhang_jingbo@dlmu.edu.cn (J. Zhang), sukai@dlmu.edu.cn (K. Su).

https://doi.org/10.1016/j.icte.2026.02.009
Received 10 September 2025; Received in revised form 22 November 2025; Accepted 24 February 2026
Available online 24 February 2026
2405-9595/© 2026 The Authors. Published by Elsevier B.V. on behalf of The Korean Institute of Communications and Information Sciences. This is an open access article under the CC BY-NC-ND license (http://creativecommons.org/licenses/by-nc-nd/4.0/).

1. In contrast to direct unfolding, prior information is extracted via Orthogonal Approximate Message Passing (OAMP) and incorporated into the input features of the GNN, enriching the nodes' hidden features and enhancing the network's ability to capture complex relationships, thereby significantly improving detection performance.
2. A new message passing scheme is proposed, in which edge features are dynamically adjusted by the neural network rather than treated as static inputs. This enables better utilization of model information and allows for a more accurate characterization of the signal propagation process.
3. The linear attention mechanism is incorporated into the message passing mechanism to enhance the model's expressive capability and alleviate the increased complexity. This integration improves the representational power of node features and optimizes the efficiency of message passing.

2. System model

Assume the number of subcarriers in the OTFS system is M and the number of time slots is N. Therefore, the number of symbols transmitted by the system is $M \times N$, which is defined as the symbol matrix in the DD domain modulated using QAM. The entire signal transmission process in an OTFS system can be divided into two parts: modulation and demodulation.

For modulation, the symbols $\tilde{\mathbf{X}}$ in the DD domain are converted into $\mathbf{O}$ in the time-frequency domain by the inverse symplectic finite Fourier transform (ISFFT), which is expressed as

$$\mathbf{O} = \mathbf{F}_M \tilde{\mathbf{X}} \mathbf{F}_N^{\mathrm{H}} \tag{1}$$

where $\mathbf{F}_M$ and $\mathbf{F}_N$ represent the M-point fast Fourier transform (FFT) of the columns and the N-point inverse fast Fourier transform (IFFT) of the rows of the DD domain symbols $\tilde{\mathbf{X}}$. Then, the time-frequency domain symbols $\mathbf{O}$ are converted into the time-domain signal $\mathbf{S}$ via the Heisenberg transform, as described below

$$\mathbf{S} = \mathbf{W_t} \mathbf{F}_M^{\mathrm{H}} \mathbf{O} = \mathbf{W_t} \mathbf{F}_M^{\mathrm{H}} \left(\mathbf{F}_M \tilde{\mathbf{X}} \mathbf{F}_N^{\mathrm{H}} \right) = \mathbf{W_t} \tilde{\mathbf{X}} \mathbf{F}_N^{\mathrm{H}} \tag{2}$$

where $\mathbf{W}_{\mathrm{t}}$ is the specific window function employed in the OTFS transmitter. If a rectangular window is adopted, $\mathbf{W}_{\mathrm{t}} = \mathbf{I}_M$, the vector form of $\mathbf{S}$ can be expressed as

$$\mathbf{s} = \mathrm{vec}\,(\mathbf{S}) = (\mathbf{F}_N^{\mathrm{H}} \otimes \mathbf{W}_{\mathrm{t}})\,\mathrm{vec}\,(\tilde{\mathbf{X}}) \tag{3}$$

where $\otimes$ denotes the Kronecker product. The signal transmission process in the time domain can be represented as

$$\mathbf{r} = \mathbf{H}\mathbf{s} + \mathbf{z} \tag{4}$$

where $\mathbf{r}$ is the received signal, $\mathbf{H}$ represents the time-variant channel matrix and $\mathbf{z}$ denotes the additive noise.

Demodulation is the inverse process of modulation, where Wigner transform and symplectic finite Fourier transform (SFFT) are applied to convert the time-domain signal into the DD domain. The received signal can be described as

$$\begin{aligned} \mathbf{y} &= (\mathbf{F}_N \otimes \mathbf{W}_{\mathrm{r}})\mathbf{r} \\ &= \underbrace{(\mathbf{F}_N \otimes \mathbf{W}_{\mathrm{r}})\mathbf{H}(\mathbf{F}_N^{\mathrm{H}} \otimes \mathbf{W}_{\mathrm{t}})}_{\tilde{\mathbf{H}}_{\mathbf{eff}}} \tilde{\mathbf{X}} + \underbrace{(\mathbf{F}_N \otimes \mathbf{W}_{\mathrm{r}})\mathbf{z}}_{\tilde{\mathbf{z}}} \end{aligned} \tag{5}$$

where $\mathbf{W}_{\mathrm{r}}$ denotes the impulse response of the receiver's pulse-shaping filter, $\tilde{\mathbf{H}}_{\mathbf{eff}}$ is the equivalent channel matrix, representing the sparse channel in delay-Doppler domain, and $\tilde{\mathbf{z}}$ represents the equivalent noise vector in DD domain. Thus, the overall signal transmission process can be equivalently modeled as

$$\mathbf{y} = \tilde{\mathbf{H}}_{\mathrm{eff}} \tilde{\mathbf{X}} + \tilde{\mathbf{z}} \tag{6}$$

3. OTFS detector based on PI-EGNN

3.1. Acquisition of prior information

Based on (6), given $\mathbf{y}$ and $\tilde{\mathbf{H}}_{\mathrm{eff}}$, $\tilde{\mathbf{X}}$ can be estimated using the OAMP algorithm [24]. Let $\hat{\mathbf{X}}$ and υ denote the current estimate of $\tilde{\mathbf{X}}$ and its average error variance. The linear step forms the pseudo-observation as

$$\bar{\mathbf{X}} = \hat{\mathbf{X}} + \mathbf{F}\left(\mathbf{y} - \tilde{\mathbf{H}}_{\mathrm{eff}} \hat{\mathbf{X}}\right) \tag{7}$$

$$\upsilon = \frac{\|\mathbf{y} - \tilde{\mathbf{H}}_{\mathrm{eff}} \hat{\mathbf{X}}\|_2^2 - NM\sigma^2}{\mathrm{tr}(\tilde{\mathbf{H}}_{\mathrm{eff}}^{\mathrm{H}} \tilde{\mathbf{H}}_{\mathrm{eff}})} \tag{8}$$

where $\mathbf{B} = \mathbf{I} - \mathbf{F}\tilde{\mathbf{H}}_{\mathrm{eff}}$ is the corresponding residual matrix and $\mathbf{F}$ is the LMMSE filter expressed as

$$\mathbf{F} = \frac{2NM\upsilon \tilde{\mathbf{H}}_{\mathrm{eff}}^{\mathrm{H}} \left(\upsilon \tilde{\mathbf{H}}_{\mathrm{eff}} \tilde{\mathbf{H}}_{\mathrm{eff}}^{\mathrm{H}} + \frac{\sigma^2}{2}\mathbf{I} \right)^{-1}}{\mathrm{tr}\left(\upsilon \tilde{\mathbf{H}}_{\mathrm{eff}}^{\mathrm{H}} \left(\upsilon \tilde{\mathbf{H}}_{\mathrm{eff}} \tilde{\mathbf{H}}_{\mathrm{eff}}^{\mathrm{H}} + \frac{\sigma^2}{2}\mathbf{I} \right)^{-1} \tilde{\mathbf{H}}_{\mathrm{eff}} \right)} \tag{9}$$

Under the standard OAMP assumptions that $\tilde{\mathbf{H}}_{\mathrm{eff}}$ has approximately orthogonal columns and $\tilde{\mathbf{z}}$ is Gaussian, the disturbance at the output of the linear module can be approximated as white Gaussian noise with variance τ given as

$$\tau = \frac{1}{2NM}\mathrm{tr}\left(\mathbf{B}\mathbf{B}^{\mathrm{H}}\right)\upsilon + \frac{1}{4NM}\mathrm{tr}\left(\mathbf{F}\mathbf{F}^{\mathrm{H}}\right)\sigma^2 \tag{10}$$

Therefore, the OAMP estimate is given by $\hat{\mathbf{X}}_{\mathbf{OAMP}} = \mathbb{E}\left\{\mathbf{X} \mid \bar{\mathbf{X}}, \tau\right\}$. Under a Gaussian approximation, the local posterior is modeled as $p(x_i \mid \mathbf{y}) \approx \mathcal{N}(\hat{\mathbf{x}}_{\mathbf{OAMP}i}, \upsilon)$, so the pair $(\hat{\mathbf{x}}_{\mathbf{OAMP}i}, \upsilon)$ can be viewed as a sufficient statistic of $p(x_i \mid \mathbf{y})$ and is directly used to construct the node features in the subsequent EGNN.

3.2. Pairwise MRF modeling

The goal of OTFS signal detection is to solve the following maximum a posteriori (MAP) problem:

$$\mathbf{X}_{\mathrm{MAP}} = \arg\max\ p(\tilde{\mathbf{X}}|\mathbf{y}) \tag{11}$$

For the MAP estimation of a given OTFS system, it can be transformed into a Markov random field (MRF)

$$p(\tilde{\mathbf{X}}|\mathbf{y}) = \frac{1}{C} \sum_{i=0}^{2NM-1} \varphi_i(x_i) \sum_{\substack{j=0 \\ j \neq i}}^{2NM-1} \varphi_{ij}(x_i, x_j) \tag{12}$$

where $\varphi_i(x_i)$ represents the node's self potential, $\varphi_{ij}(x_i, x_j)$ represents the edge's pair potential, which can be expressed as

$$\varphi_i(x_i) = e^{\frac{1}{\sigma^2}\left(\mathbf{y}^{\mathrm{T}}\mathbf{h}_i x_i - \frac{1}{2}\mathbf{h}_i^{\mathrm{T}}\mathbf{h}_i x_i^2\right)} p_i(x_i) \tag{13}$$

$$\varphi_{ij}(x_i, x_j) = e^{-\frac{1}{\sigma^2}\mathbf{h}_i^{\mathrm{T}}\mathbf{h}_j x_i x_j} \tag{14}$$

where σ^2 represents the variance of the transmitting signal in OTFS, $\mathbf{h}_i$ is the ith column of the effective channel $\tilde{\mathbf{H}}_{\mathrm{eff}}$, and $p_i(x_i)$ denotes the prior distribution, which is parameterized by the OAMP-based mean $\hat{\mathbf{x}}_{\mathbf{OAMP}i}$ and variance υ.

3.3. PI-EGNN

By reformulating the OTFS signal detection problem in terms of a pairwise MRF model, a connection with GNN can be established, thereby developing a new GNN-based detector.

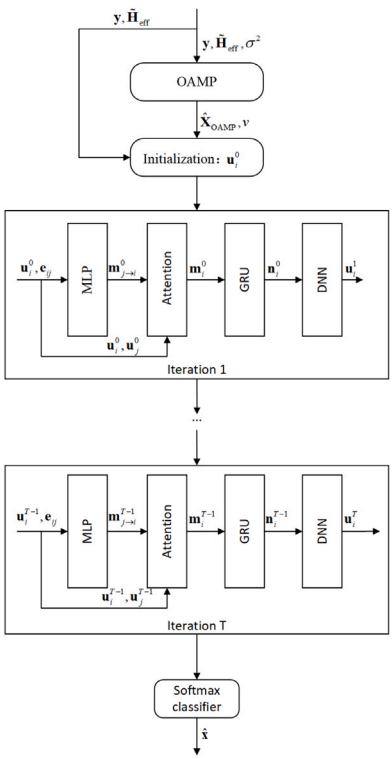

Fig. 1. The overall structure of PI-EGNN.

1. *Network Initialization:* In the proposed PI-EGNN, the node and edge features are selected from the potential functions in Eqs. (16) and (17), and define $\mathbf{u}_i^{T-1}$ to be the feature vector of the ith node at the Tth iteration. The initial value of $\mathbf{u}_i$ is computed as follows

$$\mathbf{u}_i^{(0)} = \mathbf{W}_1 \cdot \left[\mathbf{y}^{\mathrm{T}}\mathbf{h}_i, \mathbf{h}_i^{\mathrm{T}}\mathbf{h}_i, \hat{\mathbf{x}}_{\mathbf{OAMP}i}, \upsilon\right] + \mathbf{b}_1 \tag{15}$$

where $\mathbf{W}_1 \in \mathbb{R}^{N_u \times 4}$ and $\mathbf{b}_1 \in \mathbb{R}^{N_u}$ are learnable parameter matrix and vector, N_u is the dimension, $\mathbf{h}_i$ is the ith column of $\tilde{\mathbf{H}}_{\mathrm{eff}}$, and $\hat{\mathbf{x}}_{\mathbf{OAMP}i}$ is ith column of $\hat{\mathbf{X}}_{\mathbf{OAMP}}$.

2. *Message Passing:* Instead of statically feeding edge features along with node feature vectors into a multi-layer perceptron (MLP), a dynamic learning mechanism is proposed, enabling each edge to be adjusted based on the specific context in each iteration, thereby enhancing the accuracy of message passing. Consequently, the propagation process is improved as follows:

$$\mathbf{m}_{j\to i}^{(t)} = D(\mathbf{u}_i^{(t-1)}, \mathbf{u}_j^{(t-1)}, \mathbf{e}_{ji}) \tag{16}$$

where $\mathbf{e}_{ji} = \mathrm{MLP}(\mathbf{h}_j^{\mathrm{T}}\mathbf{h}_i)$ represents the feature of the edge. D is a K-layer MLP network with ReLU as the activation function. It consists of two hidden layers with N_{h1} and N_{h2} neurons, and an output layer with N_u neurons. For each node, the incoming messages have different levels of importance, and nodes with higher relevance should be assigned greater weights. Hence, self-attention is employed to dynamically adjust the weight of each message. It can be expressed as:

$$\begin{aligned} \mathbf{Q}_i &= \mathbf{W}_{\mathbf{Q}_i}\mathbf{u}_i^{(t-1)} \\ \mathbf{K}_j &= \mathbf{W}_{\mathbf{K}_j}\mathbf{u}_j^{(t-1)} \\ \mathbf{V}_j &= \mathbf{W}_{\mathbf{V}_j}\mathbf{m}_{j\to i}^{(t)} \end{aligned} \tag{17}$$

where $\mathbf{Q}_i$, $\mathbf{K}_j$, and $\mathbf{V}_j$ represent the query matrix, key matrix, and value matrix, respectively. Then, the linear attention coefficients can be obtained as

$$\mathbf{Att} = \phi(\mathbf{Q})\phi(\mathbf{K}^{\mathrm{T}}) \tag{18}$$

where ϕ represents the Gaussian kernel mapping function, which applies a nonlinear transformation to the $\mathbf{Q}$ and $\mathbf{K}$. This allows the model to capture more complex relationships between the query and the key while reducing computational complexity.

3. *Information Update:* The ith variable node aggregates the information from all its neighboring variable nodes

$$\mathbf{m}_i^{(t)} = \left[\sum_{\substack{j=1 \\ j\neq i}}^{2N\times M} \mathbf{Att}_j \mathbf{V}_j\right] \tag{19}$$

This aggregated vector, referred to as the incoming message, is used to compute the feature representation of the variable node. The hidden feature of the node from the prior time step $\mathbf{n}_i^{(t-1)}$, together with the current incoming message $\mathbf{m}_i^{(t)}$ at the current step, is fed into the Gated Recurrent Unit (GRU):

$$\mathbf{n}_i^{(t)} = U(\mathbf{n}_i^{(t-1)}, \mathbf{m}_i^{(t)}) \tag{20}$$

where GRU can handle the temporal dependencies between node states. Subsequently, the result of GRU is fed into a single-layer perceptron to update the hidden features of the variable nodes:

$$\mathbf{u}_i^{(t)} = \mathbf{W}_2 \cdot \mathbf{n}_i^{(t)} + \mathbf{b}_2 \tag{21}$$

where $\mathbf{n}_i^{(t)} \in \mathbb{R}^{N_{h2}}$ is the current hidden feature of the node, $\mathbf{W}_2 \in \mathbb{R}^{N_u \times N_{h2}}$ and $\mathbf{b}_2 \in \mathbb{R}^{N_u}$ are learnable matrix and vector, respectively. Then, $\mathbf{u}_i^{(t)}$ is transmitted to the neighboring variable nodes to continue the information update process.

4. *Result Output:* After T iterations in the information update process, the variable node feature $\mathbf{u}_i^{(t)}$ is fed into a K-layer MLP network, with the softmax function as the activation, which helps prevent numerical overflow and improves the stability and efficiency of the training process. The process can be expressed as follows:

$$p(x_i = s_i \mid \mathbf{y}) = D(\mathbf{u}_i^{(t)}), s_i \in S \tag{22}$$

where S denotes the transmitted symbols set. The entire PI-EGNN structure is shown in Fig. 1, and the pseudocode of the proposed detection method is shown in Algorithm 1.

Remark 1. Unlike AMP-GNN [22], which unfolds AMP iterations into a GNN with fixed channel-based edge weights, PI-EGNN uses an OAMP module to provide priors, injects them into the node features, and adopts dynamically learned edges with linear attention. This leads to a more informative initialization and more flexible message passing, and thus better detection performance.

Remark 2. With Lipschitz-continuous message, attention, and update networks, and network parameters chosen such that the effective gain of one PI-EGNN iteration, scaled by the maximum node degree, is strictly smaller than one, the overall update of all node hidden states is a contraction mapping. By the Banach fixed-point theorem, PI-EGNN therefore converges to a unique fixed point.

3.4. Complexity analysis

PI-EGNN consists of a prior information module and an EGNN. In the prior module, prior information is obtained via OAMP, and the complexity is $\mathcal{O}(M^3N^3T)$. In the EGNN module, the complexity depends on the network initialization and the other three modules, with a complexity of $\mathcal{O}\left(\left(N_u + N_uN_{h1} + N_{h1}N_{h2} + N_{h2}N_u + dN_u\right)MNT\right)$, where $d = d_k + d_u$, d_k represents the dimensions of the query, key, and value matrix, and d_u represents the dimensions of the feature mapping. Table 1 summarizes the computational complexity of PI-EGNN and other mainstream detectors.

Table 1
Comparison of computational complexity.

Method	Computational complexity
Ours	$\mathcal{O}((N_u + N_u N_{h1} + N_{h1} N_{h2} + N_{h2} N_u + dN_u + M^2 N^2) MNT)$
MMSE [10]	$\mathcal{O}(M^3 N^3)$
MP [5]	$\mathcal{O}(MN\|S\|L)$
OAMP	$\mathcal{O}(M^3 N^3 T)$
UAMP [13]	$\mathcal{O}(M^2 N^2 T)$
OAMP-Net [16]	$\mathcal{O}(M^3 N^3 T)$
GNN [21]	$\mathcal{O}((N_u + N_u N_{h1} + N_{h1} N_{h2} + N_{h2} N_u) MNT)$
AMP-GNN [22]	$\mathcal{O}((N_u + N_u N_{h1} + N_{h1} N_{h2} + N_{h2} N_u) MNT + M^2 N^2 T)$

Algorithm 1 PI-EGNN detector

Input: $\tilde{\mathbf{H}}_{\text{eff}}, \mathbf{y}, M, N, T, \hat{\mathbf{X}}_{\mathbf{OAMP}}, \upsilon$
Initialization: $\mathbf{u}_i^{(0)} = \mathbf{W}_1 \cdot \left[\mathbf{y}^{\mathrm{T}}\mathbf{h}_i, \mathbf{h}_i^{\mathrm{T}}\mathbf{h}_i, \hat{\mathbf{x}}_{\mathbf{OAMP}i}, \upsilon\right] + \mathbf{b}_1$
for $t \in (1, T)$ **do**
  for $i \in (0, 2MN - 1)$ **do**
    $\mathbf{e}_{ji} = \mathrm{MLP}(\mathbf{h}_j^{\mathrm{T}}\mathbf{h}_i)$
    $\mathbf{m}_{j\to i}^{(t)} = D\left(\mathbf{u}_i^{(t-1)}, \mathbf{u}_j^{(t-1)}, \mathbf{e}_{ji}\right)$
    $\mathbf{Q}_i = \mathbf{W}_{\mathbf{Q}_i}\mathbf{u}_i^{(t-1)}$, $\mathbf{K}_j = \mathbf{W}_{\mathbf{K}_j}\mathbf{u}_j^{(t-1)}$, $\mathbf{V}_j = \mathbf{W}_{\mathbf{V}_j}\mathbf{m}_{j\to i}^{(t)}$
    $\mathbf{Att} = \phi(\mathbf{Q})\phi(\mathbf{K}^{\mathrm{T}})$
    $\mathbf{m}_i^{(t)} = \left[\sum_{\substack{j=1 \\ j\neq i}}^{2N\times M} \mathbf{Att}_j \mathbf{V}_j\right]$
    $\mathbf{n}_i = U\left(\mathbf{n}_i^{(t-1)}, \mathbf{m}_i^{(t)}\right)$
    $\mathbf{u}_i^{(t)} = \mathbf{W}_2 \cdot \mathbf{n}_i^{(t)} + \mathbf{b}_2$
  end for
end for
$p(x_i = s_i|\mathbf{y}) = D(\mathbf{u}_i^{(t)}),\ s_i \in S$
Output: $\hat{\mathbf{x}}$

4. Simulation results

In the simulations, we consider an OTFS system with carrier frequency 4 GHz, frame size $M = N = 16$, QPSK modulation, user speed 120 km/h, and a Rayleigh channel with $L = 4$ taps. Cross-entropy is employed as the loss function.

$$Loss = -\sum_{x_i} p(x_i) \log \hat{p}(x_i) \tag{23}$$

where $p(x_i)$ denotes the ground-truth probability and $\hat{p}(x_i)$ is the output of the detector after T iterations. The model is trained for 1000 epochs, with each epoch containing 50,000 training samples. The dataset is divided into training and validation sets in a 4:1 ratio. Stochastic gradient descent and the Adam optimizer are employed during training, with the learning rate set to 5×10^{-4}.

To verify the effectiveness of the proposed method, we conduct an ablation study to separate the contributions of the PI module and the EGNN architecture, as illustrated in Fig. 2. Specifically, "GNN" denotes the vanilla graph detector, "EGNN" represents its edge-enhanced variant, "SGNN" denotes the variant obtained from PI-EGNN by removing the dynamic edge update, and the prefix "PI-" indicates the integration of prior information into the node features. From Fig. 2, it can be observed that incorporating prior information yields clear BER improvements, and that, under the same prior and attention, PI-EGNN consistently outperforms PI-SGNN. This shows that dynamically adjusting the edge weights leads to more accurate message passing than using static, channel-only edges.

Further comparisons with several state-of-the-art OTFS detectors are shown in Fig. 3 for the integer-Doppler case. It is evident that the proposed PI-EGNN consistently achieves the best BER performance over the SNR range from 0 dB to 20 dB and clearly outperforms all the other detectors. These gains are mainly attributed to the use of prior information in the node features, the dynamic edge-aware message passing, and the attention mechanism, which together yield a more appropriate model structure and stronger detection capability.

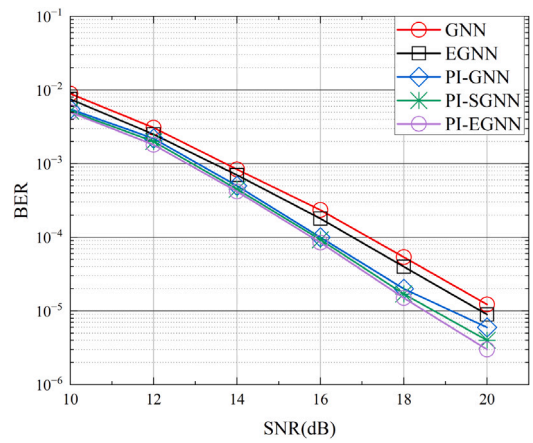

Fig. 2. Performance comparison of the proposed PI-EGNN with GNN, EGNN, PI-GNN, PI-SGNN.

Table 2
BER of PI-EGNN under different configurations (SNR = 20 dB).

Case	υ (km/h)	Mod.	$M \times N$	Channel	BER
1	120	QPSK	16×16	Rayleigh	3×10^{-6}
2	500	QPSK	16×16	Rayleigh	4.8×10^{-6}
3	120	16-QAM	16×16	Rayleigh	7.5×10^{-6}
4	120	QPSK	32×32	Rayleigh	3.1×10^{-6}
5	120	QPSK	16×16	EVA	2×10^{-5}

Fig. 4 shows a comparison of the performance of different detectors under fractional Doppler. As shown in the figure, all detectors experience performance degradation due to the fractional Doppler shift. Signal dispersion in the delay–Doppler domain causes symbol positions, which are well aligned under integer Doppler shifts, to become spread out, increasing inter-symbol interference and resulting in higher error rates. Traditional detectors suffer significant performance loss in these conditions, with the MP algorithm showing the largest degradation, whereas the GNN-based detectors exhibit stronger feature representation capability and higher robustness. In particular, PI-EGNN consistently achieves the best BER performance over the considered SNR range and outperforms all other detectors under fractional Doppler. The case with fractional delay [25] has also been examined. The results show that the performance of PI-EGNN with fractional delay is comparable to that with fractional Doppler and even slightly better, confirming that the proposed detector remains effective under realistic channels with fractional delay and fractional Doppler.

To further demonstrate the generality of the proposed detector, Table 2 reports the BER of PI-EGNN at SNR = 20 dB under several representative configurations. Case 1 corresponds to the setting in Fig. 3 and serves as the baseline. Case 2 increases the speed to 500 km/h (larger Doppler spread), and Case 3 replaces QPSK by 16-QAM; both lead to moderate BER degradation, which is consistent with the higher mobility and higher modulation order. Case 4 enlarges the frame to 32×32 and shows that the BER remains almost unchanged, indicating that PI-EGNN scales well with the frame size. Finally, Case 5 adopts the more realistic EVA channel model [26,27], under which the BER is still on the order of 10^{-5}. Overall, these results confirm that PI-EGNN maintains good detection performance across different speeds, modulation orders, frame sizes, and channel models.

To better assess the practical feasibility and complexity–performance trade-off between AMP-GNN and the proposed PI-EGNN, we also compare their measured online detection runtimes in Table 3. The results are obtained on the same platform under QPSK modulation, integer

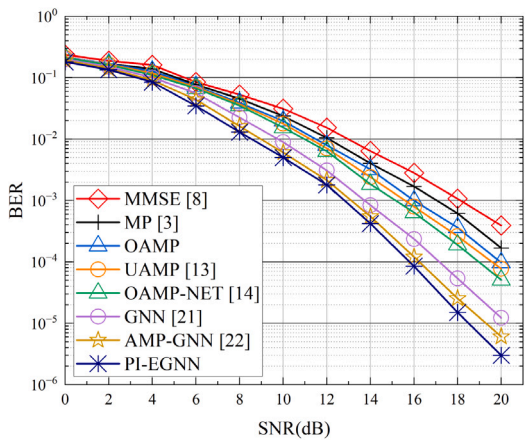

Fig. 3. Performance comparison of the proposed PI-EGNN with state-of-the-art detectors in OTFS with QPSK, integer Doppler.

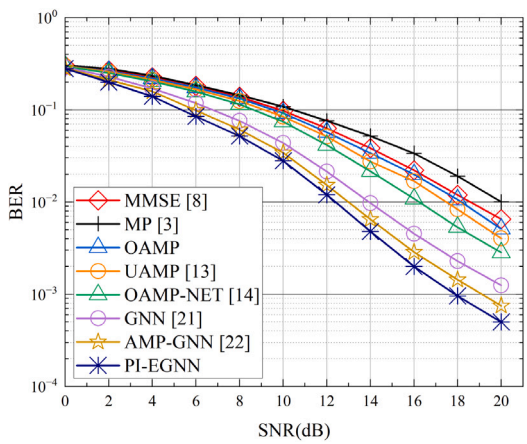

Fig. 4. Performance comparison of the proposed PI-EGNN with state-of-the-art detectors in OTFS with QPSK, fractional Doppler.

Table 3
Runtime and BER comparison between AMP-GNN and PI-EGNN.

Detector	Runtime (ms)	BER
AMP-GNN	29.8	6.1×10^{-6}
PI-EGNN	43.1	3.0×10^{-6}
Ratio (PI-E/AMP)	1.45	0.49

delay and Doppler taps, and SNR = 20 dB. As shown, PI-EGNN requires about 43.1 ms per OTFS frame, which is only 1.45 times the runtime of AMP-GNN, while reducing the BER to 0.49 of that of AMP-GNN. This demonstrates that PI-EGNN achieves a significantly larger gain in detection reliability at the cost of only a moderate increase in runtime.

5. Conclusion

This letter proposes a PI-EGNN detector with an innovative message passing method for OTFS symbol detection. The model incorporates prior information, exploits edge features, and employs linear attention to enrich the hidden features of the nodes, thereby improving detection performance. In the future, we will explore algorithms to provide prior information for EGNN, balancing complexity and performance to identify suitable designs and streamline its structure for OTFS symbol detection.

CRediT authorship contribution statement

Da Liu: Writing – review & editing, Validation, Supervision, Methodology, Conceptualization. **Congbo Wang:** Writing – original draft, Visualization, Software, Data curation. **Jingbo Zhang:** Project administration, Investigation. **Kai Su:** Software, Formal analysis.

Declaration of competing interest

The authors declare that they have no known competing financial interests or personal relationships that could have appeared to influence the work reported in this paper.

Acknowledgments

This work was supported in part by the National Natural Science Foundation of China under Grant 61601078.

References

[1] L. Xiao, S. Li, Y. Qian, D. Chen, T. Jiang, An overview of otfs for internet of things: Concepts, benefits, and challenges, IEEE Internet Things J. 9 (2022) 7596–7618, http://dx.doi.org/10.1109/JIOT.2021.3132606.

[2] M.M. Rahman, M.S. Nazim, M.I. Joha, Y.M. Jang, Real-time implementation of ofdm modulation for an occ system: Unet-based equalizer for signal denoising and ber optimization, ICT Express 11 (2025) 728–733, http://dx.doi.org/10.1016/j.icte.2025.06.002.

[3] R. Hadani, S. Rakib, M. Tsatsanis, A. Monk, A.J. Goldsmith, A.F. Molisch, R. Calderbank, Orthogonal time frequency space modulation, in: 2017 IEEE Wireless Commun. Netw. Conf., WCNC, 2017, pp. 1–6, http://dx.doi.org/10.1109/WCNC.2017.7925924.

[4] U. Iqbal, Y. Lee, S. Cho, I.-H. Lee, H. Jung, Cooperative transmission of uav swarm using orthogonal time–frequency space modulation, ICT Express 10 (2024) 1240–1246, http://dx.doi.org/10.1016/j.icte.2024.07.002.

[5] P. Raviteja, K.T. Phan, Y. Hong, E. Viterbo, Interference cancellation and iterative detection for orthogonal time frequency space modulation, IEEE Trans. Wirel. Commun. 17 (2018) 6501–6515, http://dx.doi.org/10.1109/TWC.2018.2860011.

[6] Y. Zhang, Q. Zhang, L. Zhang, C. He, X. Tian, A low-complexity approximate message passing equalizer for otfs system, in: 2021 IEEE/CIC Int. Conf. Commun. China (ICCC Workshops), 2021, pp. 449–454, http://dx.doi.org/10.1109/ICCCWorkshops52231.2021.9538883.

[7] H. Li, Y. Dong, C. Gong, Z. Zhang, X. Wang, X. Dai, Low complexity receiver via expectation propagation for otfs modulation, IEEE Commun. Lett. 25 (2021) 3180–3184, http://dx.doi.org/10.1109/LCOMM.2021.3101827.

[8] Y. Yue, J. Shi, J. Hu, Z. Tie, Z. Li, Performance analysis of oamp detection for orthogonal time frequency space modulation, in: 2022 IEEE Int. Conf. Commun. Workshops (ICC Workshops), 2022, pp. 916–921, http://dx.doi.org/10.1109/ICCWorkshops53468.2022.9814470.

[9] F. Long, K. Niu, C. Dong, J. Lin, Low complexity iterative lmmse-pic equalizer for otfs, in: ICC 2019 - 2019 IEEE Int. Conf. Commun., ICC, 2019, pp. 1–6, http://dx.doi.org/10.1109/ICC.2019.8761635.

[10] S. Tiwari, S.S. Das, V. Rangamgari, Low complexity lmmse receiver for otfs, IEEE Commun. Lett. 23 (2019) 2205–2209, http://dx.doi.org/10.1109/LCOMM.2019.2945564.

[11] T. Thaj, E. Viterbo, Low-complexity linear diversity-combining detector for mimo-otfs, IEEE Wirel. Commun. Lett. 11 (2022) 288–292, http://dx.doi.org/10.1109/LWC.2021.3125986.

[12] Y. Chi, Z. Peng, L. Liu, Y. Li, Y. Ge, C. Yuen, Low-complexity multi-slot cross-domain mamp receiver and coding principle for mimo-otfs, in: ICC 2025 - IEEE International Conference on Communications, 2025, pp. 5127–5132, http://dx.doi.org/10.1109/ICC52391.2025.11161769.

[13] X. Li, H. Wang, Y. Ge, X. Shen, J. Zhao, Message feedback interference cancellation aided uamp iterative detector for otfs systems, IEEE Wirel. Commun. Lett. 13 (2024) 924–928, http://dx.doi.org/10.1109/LWC.2024.3351149.

[14] Q. Li, Y. Gong, F. Meng, Z. Xu, Data-driven receiver for otfs system with deep learning, in: 2021 7th IEEE Int. Conf. Netw. Intell. Digit. Content (IC-NIDC), 2021, pp. 172–176, http://dx.doi.org/10.1109/IC-NIDC54101.2021.9660432.

[15] Y. Gong, Q. Li, F. Meng, X. Li, Z. Xu, Data-driven deep learning for otfs detection, China Commun. 20 (2023) 88–101, http://dx.doi.org/10.23919/JCC.2023.01.008.

[16] C. Ding, S. Li, X. Zhang, Q. Yuan, L. Xiao, A model-driven oamp detection algorithm for otfs systems, in: 2022 IEEE/CIC Int. Conf. Commun. China (ICCC Workshops), 2022, pp. 42–47, http://dx.doi.org/10.1109/ICCCWorkshops55477.2022.9896698.

[17] X. Zhang, L. Xiao, S. Li, Q. Yuan, L. Xiang, T. Jiang, Gaussian amp aided model-driven learning for otfs system, IEEE Commun. Lett. 26 (2022) 2949–2953, http://dx.doi.org/10.1109/LCOMM.2022.3206414.

[18] A. Scotti, N.N. Moghadam, D. Liu, K. Gafvert, J. Huang, Graph neural networks for massive mimo detection, 2020, URL https://arxiv.org/abs/2007.05703 arXiv:2007.05703.

[19] H. He, A. Kosasih, X. Yu, J. Zhang, S. Song, W. Hardjawana, K.B. Letaief, Gnn-enhanced approximate message passing for massive/ultra-massive mimo detection, in: 2023 IEEE Wireless Commun. Netw. Conf., WCNC, 2023, pp. 1–6, http://dx.doi.org/10.1109/WCNC55385.2023.10118792.

[20] Z. Liu, D. He, N. Wu, Q. Yan, Y. Li, Model-driven iep-gnn framework for mimo detection with bayesian optimization, IEEE Wirel. Commun. Lett. 13 (2024) 387–391, http://dx.doi.org/10.1109/LWC.2023.3329876.

[21] X. Zhang, S. Zhang, L. Xiao, S. Li, T. Jiang, Graph neural network assisted efficient signal detection for otfs systems, IEEE Commun. Lett. 27 (2023) 2058–2062, http://dx.doi.org/10.1109/LCOMM.2023.3286800.

[22] W. Zhuang, Y. Mao, H. He, L. Xie, S. Song, Y. Ge, Z. Ding, Approximate message passing-enhanced graph neural network for otfs data detection, IEEE Wirel. Commun. Lett. 13 (2024) 1913–1917, http://dx.doi.org/10.1109/LWC.2024.3395700.

[23] S. Wang, B.Z. Li, M. Khabsa, H. Fang, H. Ma, Linformer: Self-attention with linear complexity, 2020, URL https://arxiv.org/abs/2006.04768 arXiv:2006.04768.

[24] Y. Ge, Q. Deng, P.C. Ching, Z. Ding, Otfs signaling for uplink noma of heterogeneous mobility users, IEEE Trans. Commun. 69 (2021) 3147–3161, http://dx.doi.org/10.1109/TCOMM.2021.3059456.

[25] Q. Deng, Y. Ge, Z. Ding, A unifying view of otfs and its many variants, IEEE Commun. Surv. Tutor. (2025) 1, http://dx.doi.org/10.1109/COMST.2025.3542467.

[26] S. Singh, K. Deka, S. Sharma, Y.-P. Lin, N. Rajamohan, Beamforming optimization and admm-based detection in irs-aided otfs systems, IEEE Open J. Commun. Soc. 6 (2025) 1948–1964, http://dx.doi.org/10.1109/OJCOMS.2025.3548271.

[27] A. Singh, S. Sharma, M. Sharma, K. Deka, D.B. da Costa, Autoencoder-based end-to-end otfs system design with hardware impairments, IEEE Wirel. Commun. Lett. 13 (2024) 2285–2289, http://dx.doi.org/10.1109/LWC.2024.3412240.