Semester Final report

Deployable Solar Panels for CubeSats

Team: Aaron Apel, Clay Busbey, Eemeli Kohtanen, Brandon Semones,
Saori Shigehisa and Cole Sterck
Mentor: Dr. Ramana Pidaparti, Parker Ensing

Executive Summary

Project Description

Currently, the University of Georgia Small Satellite Research Laboratory is focused on developing and launching new technologies into space by utilizing the CubeSat platform, which is a small-scale satellite that is designed for rapid iteration and development.The SSRL has tasked us with creating a deployable solar array for one of their 1U Cube Satellites. Because of the 1U Cube Satellite's small size, power generation is a common problem, which results in limited capabilities for the satellite. To fix this problem, deployable solar panels are often used. The solar array is stowed away during launch, and deploys once the satellite is in space. The solar array will provide the satellite with enough power to fulfill its mission.

Design Objective

Our client has given us design objectives to complete before we finish this project. We are expected to design a deployment mechanism that maneuvers open four solar panels to increase the surface area of the satellite for solar cells to be attached to. We also must fit our deployment system in the 1U CubeSat dimensions of 10x10x10cm. For the actual deliverable to the client, we have been tasked with producing a prototype that can deploy four solar panels. Our client has informed us our prototype does not need to be made of space-grade materials to save cost on the prototype. We will still have to research what material we would be using for a space-ready deployment system. Additionally we must manufacture a prototype deployment mechanism that must accurately represent the actual application that will be implemented on the CubeSats.

Customers/stakeholders and their Requirements

Stakeholders

Our client consists of The Small Satellite Research Laboratory which was founded in 2016. The purpose of this lab at the University of Georgia includes building CubeSats to be launched in space. The CubeSats will allow students to become familiar with the technology that is used by other space exploration corporations. SSRL has its first satellite (SPOC) currently in orbit. The next satellite, Mission for Education and Multimedia Engagement (MEMEsat) will be the next satellite to enter low earth orbit for study and research purposes. This satellite will be constantly communicating data to our lab and will serve as our model for the deployable solar panel model.

Our internal stakeholders consist of the Small Satellite Research Laboratory and the University of Georgia. The SSRL and Parker Ensing are our client for the project and want our group to design and prototype a deployable solar panel for a 1U CubeSat while staying under budget. The University of Georgia and our mentor/professor Dr. Pidaparti wants us to use our skills learned from our engineering classes to professionally design a deployable solar panel and represent the university at the Georgia Tech Aeronautical competition. The external stakeholders consist of: NASA, U.S. Military, JPL, SpaceWorks, AGI and Foreign Space Agency. All our

external stakeholders have different interests in our project. NASA and JPL have a lot of power by setting regulations we must follow to launch the SSRL satellites. SpaceWorks and other space organizations have an interest in the concepts we design for CubeSats deployable solar panels to be used on future satellites.

Engineering Specifications

The Small Satellite Research Laboratory wants solar panels that can be efficiently deployed after the satellite has been launched, and the solar panels need to be able to power the CubeSat successfully for its lifetime. NASA requires that our design, payload, and the size of the CubeSat itself meets the 1U CubeSat dimensions. This means that our deployable solar panel design must fit within the 10x10x10 cm 1U CubeSat.

Benchmarking

Existing Design Solutions - Mechanical

- XSAS system: "A High Power Extendable Solar Array for CubeSat Applications".
- **Functionality:** This design includes "multi-panel, double-sided, deployable solar array and a power management and storage bus". The mechanism is attached to a 3U system so we will not be using it on our satellite but we can use this design to gather some ideas and see what worked for this team and what failed.

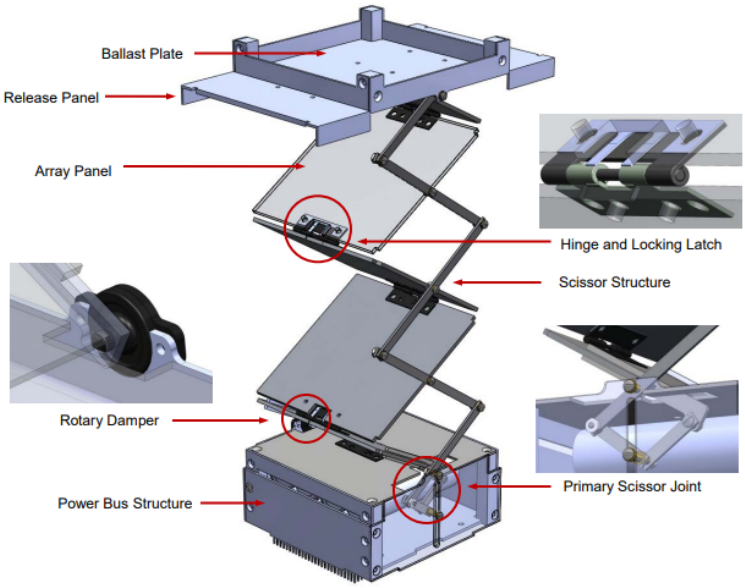

Figure 3. CAD Model and Key Design Features

- **Performance/Environmental:** Total Weight: 5.00Kg with 30% contingency, Net Max Power: 32.0W. The team stated they manufactured their design and it deployed "flawlessly" for the first couple of tries but they experienced "deterioration" within the

hinges and locking systems. The team also found one of the scissor arms split because of the continuous deploying and retracting of the system. As a result, we will look into avoiding weak components and focus on durability, hopefully succeeding where they failed. Succeeding in creating strong joints will prevent debris from entering the atmosphere.

Existing Design Solutions - Electrical

- Burn Wire system to release the spring loaded mechanical system.
- **Functionality**: The circuit produces a current that is sent through a wire connected by two metal pins. The wire is burnt allowing the spring loaded mechanism to deploy the solar panels.
- **Performance**: Below in the chart are the values of the required current to burn the wire and the duration of the burn time (Fail Time).

Nichrome Wire Resistive Length (mm/in)	Resistance (Ω) – as measured from screw to screw	Failure Current (amps)	Failure Time (sec)
13 / 0.50	0.8	2.15	7
19 / 0.75	1.1	2.05	7
25 / 1.0	1.5	1.95	7
32 / 1.25	1.3	1.95	9
38 / 1.50	1.5	1.9	10
45 / 1.75	1.6	1.95	14
51 / 2.0	1.8	1.9	20
57 / 2.25	2	1.9	17
64 / 2.5	2.1	1.975	30
70 / 2.75	2.2	1.975	19
76 / 3	2.2	1.975	13
83 / 3.25	2.4	1.9	15
89 / 3.5	2.6	1.9	19
	Avg. Failure Current	**1.960**	

- **Cost:** In the figure below, the cost of the system we researched are included. Our system should not contain all of these components so the total price will be drastically decreased. The electrical team believes they can use the Nichrome wire within a PCB board to replace the entire Stainless steel and Aluminum components, which costs more. As a result, the only cost we might incorporate is the $18.65 from the wire. However, if we do end-up using the entire mechanism, only one system will cost $166.21 which is manageable.

Part Description	Material	Secondary Processing	Quantity	Total Cost
Upper Saddle	Aluminum 6061	Hard Anodize	10	$849.00
Lower Saddle	Aluminum 6061	Hard Anodize	10	$200.00
Dowel Pin	18-8 Stainless	None	20	$430.00
Compression Springs (CI013DE03M from Lee Spring)	302 Stainless Steel	None	100	$101.00
1/8" External Snap Rings (McMaster-Carr)	Beryllium Copper	None	100	$12.50
#0 Stud Ring Terminals (McMaster-Carr and Stripping Manufacturer)	Copper	Tin Stripping	100	$45.30
#0 Fasteners (McMaster-Carr)	18-8 Stainless Steel	None	100	$5.68
0.0100" Diameter Nichrome Wire	Nickel Chromium	None	1/8 lb.	$18.65
			Total Cost for 10 Mechanisms	**$1,662.13**
			Cost per Mechanism	**$166.21**

Design Concepts

Mechanical Concept:

Using the knowledge, we have on our project and the design objectives laid out from our first meeting with our client. The team created eight different design sketches for the mechanical system of our deployable solar panels. The mechanical design concepts resulted in spring-assisted hinges, double panel spring-assisted hinges, slide opening panels, and a scissor hinge system.

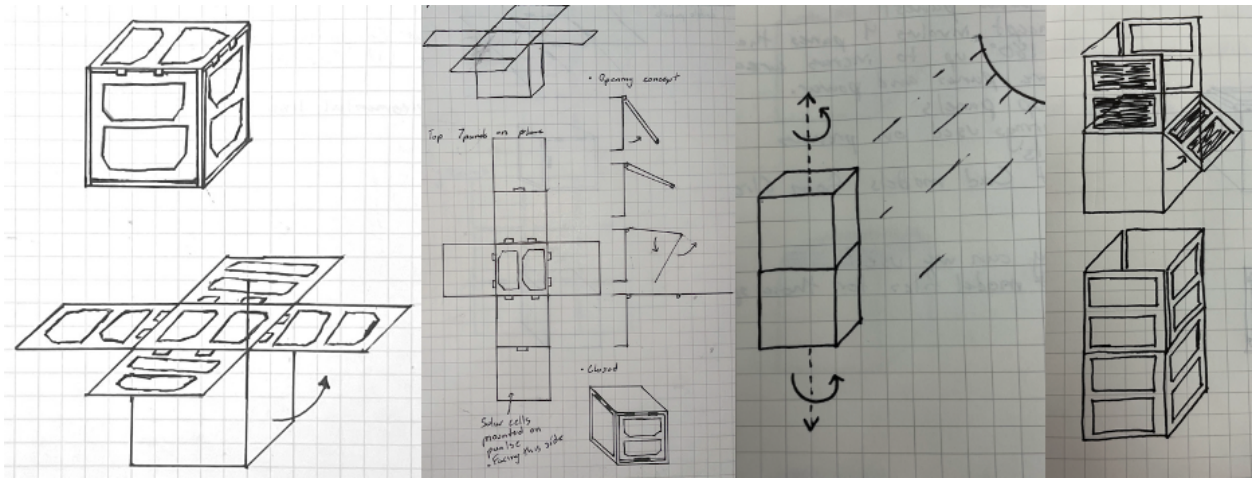

All the original design concepts were presented to our client to gather feedback. During this meeting, our client informed us that the CubeSat we are designing deployable solar panels will use a passive magnetic attitude control (PMAC) system. PMAC systems consist of a bar magnet that aligns the heading of the CubeSat within 10 degrees of the earth's local magnetic fields. With this information we found one downside to the PMAC system is we have no control over the satellite's roll around the center heading direction axis. We now needed to change the mechanical concept designs to accommodate the passive magnetic attitude control system and the limited control over the roll. We all went back to the design concept stages and designed a few more concepts with the new information in mind. The team had another meeting to pick the best design concepts for the mechanical deployment system. For the design concept review meeting, we were looking at many criteria and used the QFD we created based on the design objectives, engineering specifications, and client/team goals. Some of the main criteria we used to pick the best design concept are:

- Increase satellite surface area to mount solar cells
- Accommodates for the PMAC system of the satellite and the limited roll control
- Simplicity of deployment method
- Simplicity of mechanical design
- Deployment reliability
- Size/ Physical volume of the mechanical deployment system

The team narrowed down the designs to one final concept design that fit all the criteria created by the team and the client. The new concept designs will use a 180-degree spring-assisted hinge, rotating the solar panels up to their final position. The orientation and arrangement of the solar

panels best accommodate the PMAC system. The orientation and arrangement of the solar panels give the CubeSat the most sunlight exposure while it is rotating around its heading axis.
A disadvantage to this design is the complexity of the 180-degree spring-assisted hinges and the extra space needed for them to operate. Another disadvantage to this design is when the CubeSat is in the fully closed position all the solar cells will be facing inwards to the satellite body. This added a possible mission failure. If there is a failure in the hinge deployment system, the satellite will not produce any power resulting in a mission failure. As a team, we will have to test our design to confirm the reliability of our mechanical deployment system as it will be a mission-critical system.

<u>Initial Mechanical CAD Design Concept:</u>

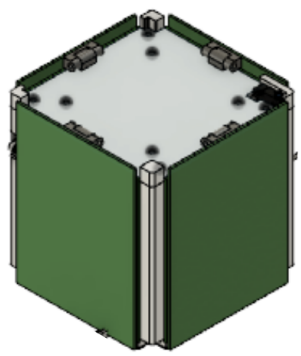

Closed

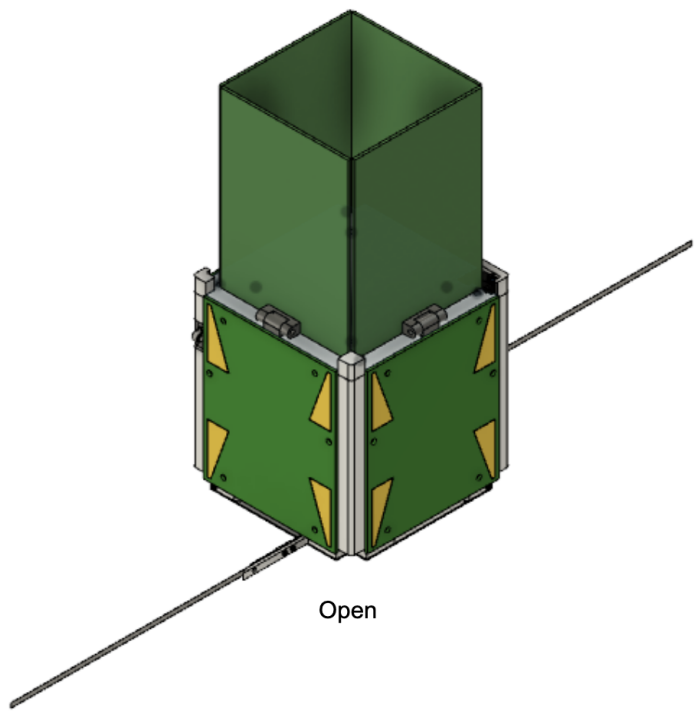

Open

For the final design concept, we chose as a team, we made an initial CAD design that shows the CubeSat in its closed launch position and its open in-flight position. This design was a rough design to confirm the concept would work in the limited space of the 1U CubeSat. We were able to demonstrate that our concept for the 180-degree spring-assisted hinge will open fully and fit in the space provided. In our initial CAD concept design, we found a few places where we need to get feedback from our client. We need to find out if we can move a sensor or if we will need to design around it. We are currently working on a more complete design for our deployment system.

Mechanical Detailed Designs

The team designed a spring assisted hinge for the deployment of solar panels on a 1U nano CubeSat. The focus of our designs were simplicity and reliability as onec the CubeSat is launched to low earth orbit it needs to deploy without failular. If the satellite fails to deploy its solar arrays the mission would be ended and a waste of time and money. Our final design was a very simple compact hinge that consisted of a few main components: the base, a connector arm, the springs and the axel.

The first main component is the base of the hinge that has to mount to the top surface of the CubeSat. The base was designed to be manufactured out of aluminum with a protective anodized coating. We chose aluminum for its corrosion resistance, ease of machining and it being the same material used for the CubeSat frame. For the base of the hing we originally designed it to need a separate base for each side of the satellite. We made this decision to save on weight and to give the flexibility of not having solar arrays deploying from all 4 sides. In later hinge base designs we changed the base of the hinge to be bigger so it would be easier to mount to the top of the CubeSat. We found that the weight of the hinge base was not an issue for the overall satellite design and it reduced the difficulties of mounting it to the CubeSat frame. In our prototyping of the base we used 3D printing as it was the cheapest and fastest method to rapidly test multiple hinge base designs. For our final hinge base design we had a base that allowed for 4 sides of deployment and could be mechanically fastened to the satellite as well as secured with space rated epoxy.

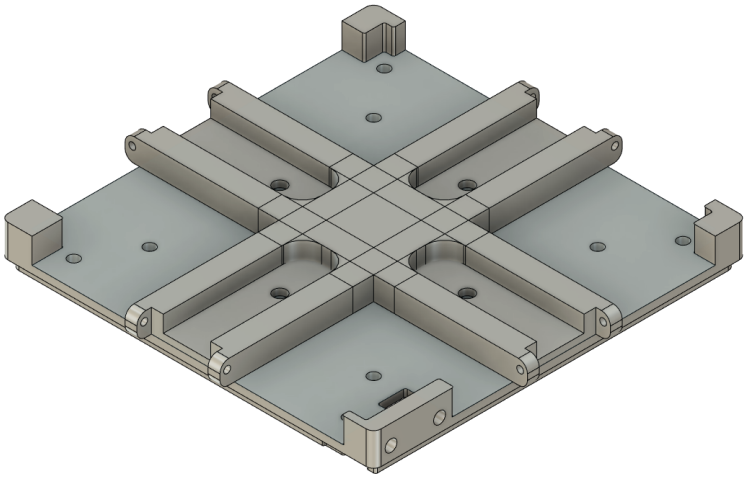

The second main component is the conector arm that the solar cells will be mounted to and will be the moving component of the spring assisted hinge. The design of the connector arm is to be manufactured out of aluminum and anodized for corrosion resistance. The connector arm is very simple but strong enough to support the solar cells in the fully deployed position. In the design the solar cells are directly mounted to the arm using a space rated epoxy. For our prototyping we added extra support to the connector arm as the 3D printed plastic was not strong enough to

support the solar cells during the prototyping test. In the final design the aluminum arm was harder to manufacture than originally thought of due to the flexibility of the thin metal.

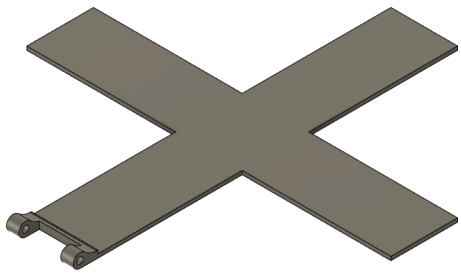

Prototype Design

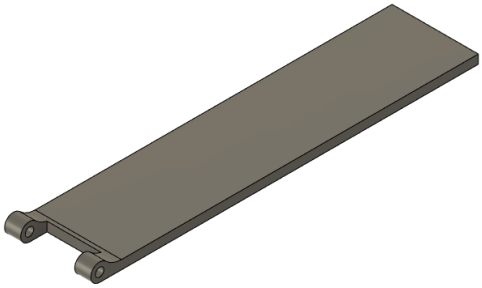

Final Design

The final two components to the spring assisted hinge are the spring and the axel. The spring was originally designed to be a stainless steel 180 degree spring. We picked stainless steel due to its strength and corrosion resistance. The 180 degree spring was not able to hold the solar array in its fully open position and we had a hard time mounting them into the hinge system. With the springs not firmly mounted the vibrations from launch could move them out of position causing a failure to deploy to solar arrays. To fix this problem we got 270 degree stainless steel springs. With the 270 degree springs we could pre-load the springs when mounting, helping the springs with holding the solar arrays at the fully deployed position. The 270 degree springs also allowed for better mounting in the hinge system. The axel the hinge system used was a stainless steel rod that would be pressed fitted into the base reducing its likelihood to come freed during the vibrations of launch.

<u>Electrical Detailed Designs</u>:

The electrical system's goal includes efficiency and simplicity. The system's reliability has the utmost importance since the CubSat's mission relies on its ability to obtain power. The electrical system was broken up into two major sections for our client: The Nichrome Wire and Solar Panel system.

<u>Nichrome Wire System</u>

The Nichrome Wire system is what holds the deployable panels back from their folded position during launch. After deployment the Nichrome wire system is responsible for the releasing of the panels.

<u>Power:</u>

For our power system of the prototype we initially used the default LIPO battery from the PiJuice hat. However, we needed a high capacity battery to last longer. AS a result we increased the milliAmp Hours (mAH) of the battery. The battery included a 3.7 V Lipo Battery with 5000mAh as seen below.

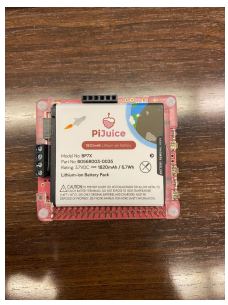

<u>Nichrome Wire:</u>

The nichrome wire systems' functionality is to burn through the tethered panels for the deployment of the solar panels which absorb sunlight for power. The nichrome wire heats up due to the current flowing through it, and burns through the nylon strong holding the panels down. We tested three types of Nichrome Wire: 26 AWG, 30 AWG, and 36 AWG. We tested them with 3.7 volts, which is the same voltage from our LIPO battery, as well as having a standardized length of 2 inches. Using an Ammeter and Ohm's Law we found the current produced from the Nichrome wire and found that 36 AWG has the lowest power consumption since it has the lowest current draw.

*Capstone Notes - Notepad

File Edit Format View Help

```
Nichrome Wire

Length = 2inches ; Voltage = 3.7V ; V=IR

26g     0.6ohms         6.1667A

30g     1.6ohms         2.3125A

36g     4.5ohms`        0.8222A (can only use this one)
```

Transistors:

In order to alternate the current to the different nichrome wire segments we used NPN transistors. The transistors include the TIP31C's since they are rated for higher voltages and currents. In our final prototype, the two transistors controlled our nichrome wire timing by aching like switches. The switches were logically programmed by an Arduino Microcontroller that emitted 5V to the base of the transistor in order for the collector voltage of 3.7 V to flow to ground, causing the Nichrome Wire to heat up. The Voltage and Current ratings are shown below in a chart from the NPN transistors' datasheet

Symbol	Parameter		Value	Unit
V_{CBO}	Collector-Base Voltage	TIP31A	60	V
		TIP31C	100	
V_{CEO}	Collector-Emitter Voltage	TIP31A	60	V
		TIP31C	100	
V_{EBO}	Emitter-Base Voltage		5	V
I_C	Collector Current (DC)		3	A
I_{CP}	Collector Current (Pulse)		5	A
I_B	Base Current		1	A
T_J	Junction Temperature		150	°C
T_{STG}	Storage Temperature Range		-65 to 150	°C

Final Schematic/Testing

The final electrical system includes the following:

- Nichrome Wire
- Arduino
- NPN Transistors
- 1k Resistors
- 3.7 LIPO Battery

In summary the 3.7 Volts provides the necessary power to the entire system, which includes the Arduino and the Collector voltage of the NPN transistors. The Transistors then are activated by the Arduino PWM signal of 5 Volts. Then, this allows the Nichrome Wire to heat up causing the controlled burn to release the mechanism. The resistors are there to limit the current draw from the Arduino so the Arduino does not break since it has a limited current draw it can handle. The entire system is demonstrated below in the Eagle CAD and in a picture of the fabricated PCB.

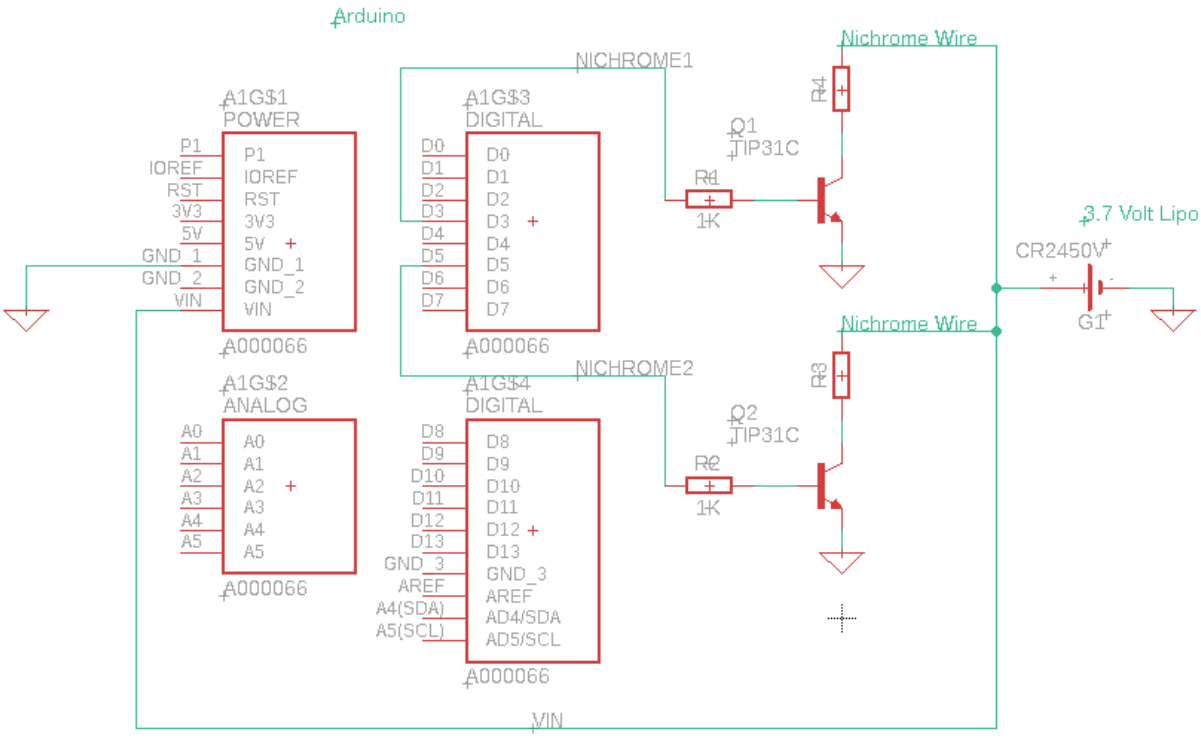
Arduino
A1G$1
POWER
P1
IOREF
RST
3V3
5V
GND_1
GND_2
VIN
A000066
A1G$2
ANALOG
A0
A1
A2
A3
A4
A5
A000066
A1G$3
DIGITAL
D0
D1
D2
D3
D4
D5
D6
D7
A000066
A1G$4
DIGITAL
D8
D9
D10
D11
D12
D13
GND_3
AREF
A4(SDA)
A5(SCL)
A000066
NICHROME1
NICHROME2
Q1
TIP31C
Q2
TIP31C
R1
1K
R2
1K
R3
R4
Nichrome Wire
Nichrome Wire
3.7 Volt Lipo
CR2450V
G1
VIN

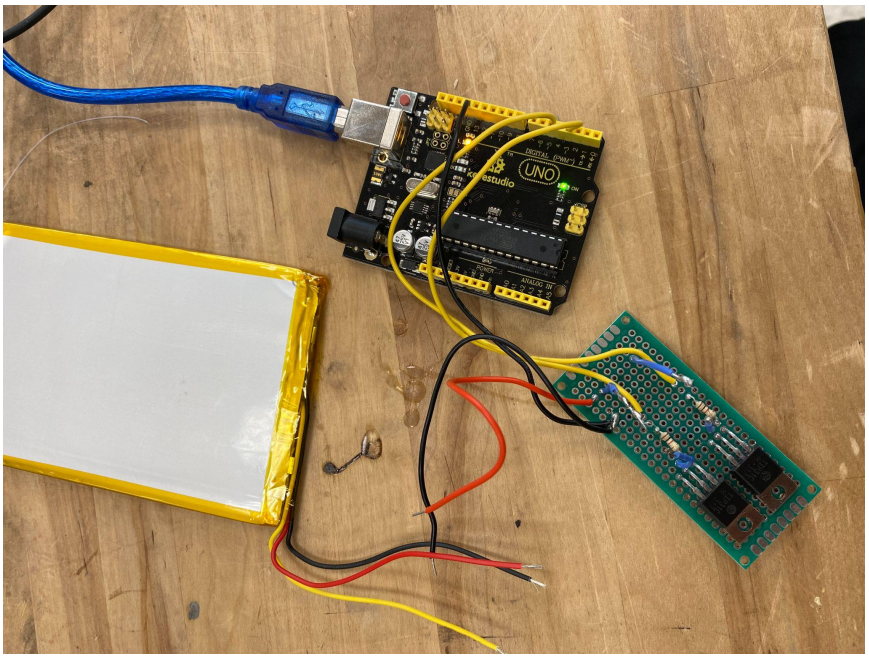

Solar Panel System

Solar Panels:

We used solar panels that were not space grade since our client wanted us to fabricate the prototype with budget restrictions. Our client wanted to acquire the theoretical system we would implement as the power source for the prototype. As a result we used the solar panels shown below. We soldered four panels in series, then a collection of them in parallel. In total, we had four in series and 8 in parallel for each side. We tested the output voltage and were successful in acquiring an increase of voltage from shining and additional light source, as seen below. The output voltage initially was roughly 4.9 Volts and then we reached 7.09 Volts with an additional flashlight. These values could fluctuate, however we were successfully able to determine the theoretical orientation of the CubaSat from the change of voltage.

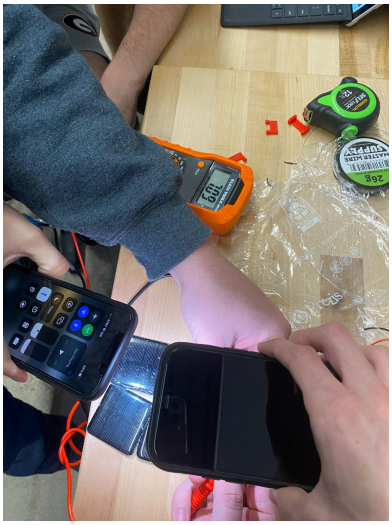

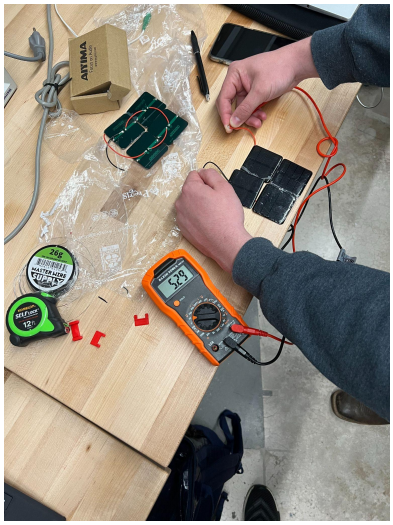

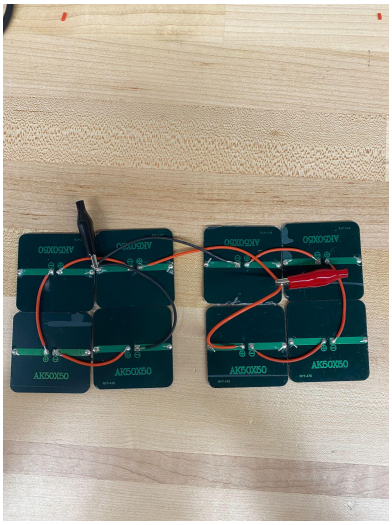

Sensor

Regarding the Sensor, Solar Panels and the Raspberry pi, they will entail a separate circuit. The Solar Panels will be connected to a Pi Hat called PiJuice that converts the solar panel energy to charge the Raspberry Pi Model 4. The Hat also has the capability to read Temperature, Voltage and battery percentage. The Hat will act as a power management system as well as a sensor to relay information if the mechanical system had been deployed.

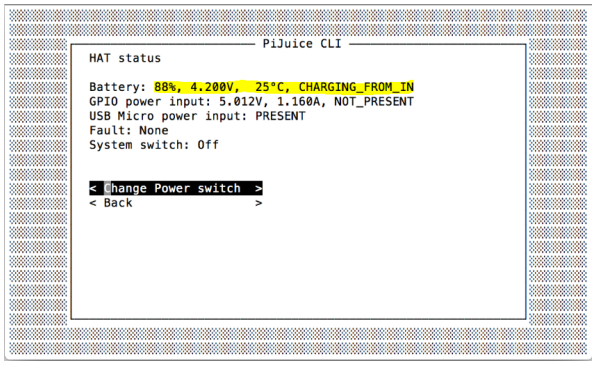

Software Design:

We built the implementation for PiJuice and its setting. however, the amount of the PiJuice battery did not show on the top right of the window. We attempted with the voltage source and another portable battery, but neither worked on the PiJuice. We found that there was a "communication error." We eventually figured out that we burnt the PiJuiceHat. Therefore, we decided to use an alternative solution to use Arduino instead of Raspberry Pi 4. The following code is the implementation on Arduino:

nichrome_test

```
int Nichrome1 = 3;
int Nichrome2 = 5;
void setup() {
  // put your setup code here, to run once:
pinMode(Nichrome1,OUTPUT);
pinMode(Nichrome2,OUTPUT);
}
void loop() {
delay(5000);
analogWrite(Nichrome1,255);
delay(5000);
digitalWrite(Nichrome1,LOW);
analogWrite(Nichrome2,255);
delay(5000);
digitalWrite(Nichrome2,LOW);
delay(10000);
}
```

Design Codes/Standards

We as a team followed the ASME Code of Ethics throughout the project. For the entire design process of the deployment system, the team followed the "NASA CubeSat 101 Book". The book lays out all the steps in designing and testing a CubeSat for launch into low earth orbit. We used the book in the process of choosing the materials to use in our hinge system. The book also informed us of the limitations of a design with moving components in the space environment. The CubeSat book helped design our test of the deployment system. Due to the satellite being in zero gravity and a vacuum when the actual deployment will happen we had to test the system on its side. With the satellite on its side, the weight of the solar arrays is not acting against the spring, giving the test the closest simulation to zero gravity.

The mechanical team used the NASA "Structural Design/ Factor of Safety: NASA-STD-5001" and the "Load Analyses: NASA-STD-5005" when designing the spring-assisted hinge. We found the factor of safety was much lower than the ASME standards due to the limitations of the space

environment, the size, and the weight of the satellite. The hinge base stop and hinge connector arm need to be designed so there would be no deformation in either part when the hinge is fully deployed and stopped at its 180-degree position. We used both references in the initial design and found that with the useful life of one opening the aluminum would survive with no deformation. We also had to reference the NASA codes when choosing our springs. We need to make sure our spring was strong enough to open the solar arrays but not too strong to cause the satellite to spin out of control after deployment due to the torque created when the solar arrays and connector arm came to a stop at the hinge base.

Prototype/Evaluation

The mechanical prototype testing took place in the UGA fabrication lab. For the prototype, we tested the hinges multiple times starting with 3D printed hinges and finishing our testing with an aluminum manufactured hinge. For all the 3D printed hinge tests we were confirming our mechanical hinge design met our specifications. The prototype was to make sure the hinge opened and closed to the specified 180 degrees. The second 3D printed hinge was similar to the first with the addition of springs to assist in opening the hinge to the specified 180 degrees and to hold it at its required open position. In this second test, we found we needed to use two springs to lift the solar cells that weigh around 10 grams each. The second hinge prototype design had met the mechanical specifications and the full aluminum hinge was manufactured. The aluminum prototype hinge was tested and performed better than expected. During the 3D printed prototype hinges, plastic used caused extra friction and flex during the test causing the panels to not fully deploy in the specified 180-degree open position. Due to the aluminum hinges being more rigid the planes fully deployed and stayed in the specified 180-degree open position.

In final prototype testing, the whole system was put together from mechanical to electrical systems. The final test setup consisted of a 3D printed 1U CubeSat frame with the electrical components mounted inside and the mechanical hinge system mounted to the top of the frame. The test was to demonstrate the electrical system's ability to deploy the solar arrays. To pass we needed to see the electrical system burn the nylon cord to release the spring-assisted hinges. During the test, we also were testing the electrical system's ability to also control what sides of the CubeSats solar arrays would deploy to help reduce excessive rotations in the space environment. Through all the testing we are satisfied with the spring-assisted hinge system for a deployment method of solar arrays on a 1U nano CubeSat.

Creativity and Innovation –

Our team was innovative when our PiJuice Hat broke. We put too much current into our Hat and were unable to acquire the necessary reading from it. In order to demonstrate the voltage reading, we plugged the output voltage into the Analog In Pins of the Adruino. The code then portrayed the voltage values on a serial monitor. This demonstrates our last-minute ingenuity.

Contribution of each Group Member

Aaron Apel:

I completed most of the design CAD work for the hinge from the prototype to the final design. I learned how to design on Fusion 360 software but found it is far from the industry standard CAD that I used in my internships. During the design process, I learned more about the design limitations of space-rated components, designs, and materials. I also did all the 3D printing for the prototyping of the hinges and the 1U CubeSat frames that we used in the testing and the final showcase. I mastered the 3D printer I used to print everything during the project. I also learned the slicing software used, to take a design in CAD to a physical 3D printed part.

Cole Sterck:

I was the electrical lead of the team as well as the overall lead contact for the project. I handled the electrical system for the deployable system. I designed and tested all of the electrical components that went into the nichrome wire deployment. During fabrication I made the entire PCB that was implemented into our final prototype. I also tested and soldered together the solar panels for the testing of the Pijuice. I helped Saori with the testing of our Pijuice Hat. I was the main driving team member for the documentation of the project assignments and keeping the team on track. I was in charge of the poster and helped set up the station at the showcase. During the fabrication I aided the mechanical team with the final prototype. I learned the essential of understanding electrical systems and how testing each component is helpful in prototyping.

Eemeli Kohtanen:

Aided with the mechanical assembly of our final prototype. In the beginning stages did research of different deployment mechanisms for CubeSat deployable solar panels, burn wire deployment mechanism being one of them. We ended up utilizing the burn wire idea in our final design. Attended group meetings to talk about problems and or design decisions we wanted to implement. Contributed to the eLC and edusourced milestone writing assignments and deliverables. Learned different rules to keep in mind when designing and testing prototypes for space, like how to imitate 0g environment, and keeping the deployment system from tumbling in space after deployment.

Clayton Busbey:

I aided the team in the generation of requirements and constraints for the electrical and mechanical design of the system. I provided knowledge and expertise in the field of satellite development and aerospace standards. I completed the machining and assembly of the final aluminum prototype panel hinge. I worked as a liaison between the machine shop and college of engineering to ensure the completion of a final prototype. Additionally, I managed the budget and purchasing of components for prototypes and testing. I contributed to the ELC and Edusource milestones completed by the group.

Saori Shigehisa:
I mainly contributed to most of the software work and the presentation. I also worked as a member of the electrical team. I tested the portable battery simulation with Cole. I created an entire diagram system flowchart using the software, called Drawio. I designed the circuit on Multisim and tested it on a breadboard. I also created the foundation for the poster. I attended group meetings to discuss problems and or design decisions we wanted to implement. I also checked the milestone due dates and reminded my teammates. During the fabrication, I helped the mechanical team with the final prototype. In addition, I contributed to the ELC and Edusource milestones completed by the group.

Brandon Semones:
I mainly assisted in the development of the prototype ideas. Initially, I contributed an idea for a "roll out" style solar panel that was based off of our original idea to make the small satellite expand from a 1U size to a 2U. When developing the final prototype and product I researched and provided the requirements for a small satellite through both NASA. Additionally I asisted the rest of the mechanical team in assembling and demonstrating the final prototype in a way that it would represent the expansion of the solar panels in a zero g environment prior to it being attached to the fuselage of the satellite. Finally I assisted with the completion of the Edusource milestones and contributed to the ELC milestones.

Summary and Recommendations –
Upon completing the capstone senior design process, our team created a minimum viable power system for 1U cube satellites. This system is capable of stowing 1U solar panels in a compact form during launch. The panel is held in place by a nylon rope wrapped around the end of the panel and a coil of nichrome wire. Upon deployment, the stowed panels are released when current is passed through the nichrome wire. This wire heats up melting through the nylon rope releasing the panels. This occurs in two stages with opposing panels being released simultaneously. After waiting several seconds the panels perpendicular are released. The panels are forced open by a spring assisted hinge that has a maximum range of motion of 180 degrees. Once all panels have been deployed, power generation begins. Current flows from the solar cells arranged in series to the Pi Juice electronic power system. The pie juice regulates the voltage and current flowing into the battery. It also manages the battery charging and power delivery to the raspberry pi. The raspberry pie functions as the flight computer and power system controller. The raspberry pie is powered by the pie juice during lunch and deployment. The Pi keeps track of the time after deployment triggering the release of the solar panels after a set interval.

References

Loff, Sarah. "CubeSats Overview." *NASA*, NASA, 22 July 2015, https://www.nasa.gov/mission_pages/cubesats/overview.

Concept, Design, and Prototyping of XSAS: A High Power Extendable Solar ... https://ntrs.nasa.gov/api/citations/20100021926/downloads/20100021926.pdf.

A Nichrome Burn Wire Release Mechanism for CubeSats - ESMATS. https://esmats.eu/amspapers/pastpapers/pdfs/2012/thurn.pdf.

TIP31A TIP31C - NPN Epitaxial Silicon Transistor. https://www.mouser.com/datasheet/2/149/fairchild%20semiconductor_tip31a-549394.pdf.

"Pijuice Quick Start Guide and FAQ • Pi Supply Maker Zone." *Pi Supply*, https://learn.pi-supply.com/make/pijuice-quick-start-guide-faq/.

Society Policy Ethics Code of Ethics of Engineers - Asme.org. https://www.asme.org/getmedia/3e165b2b-f7e7-4106-a772-5f0586d2268e/p-15-7-ethics.pdf.