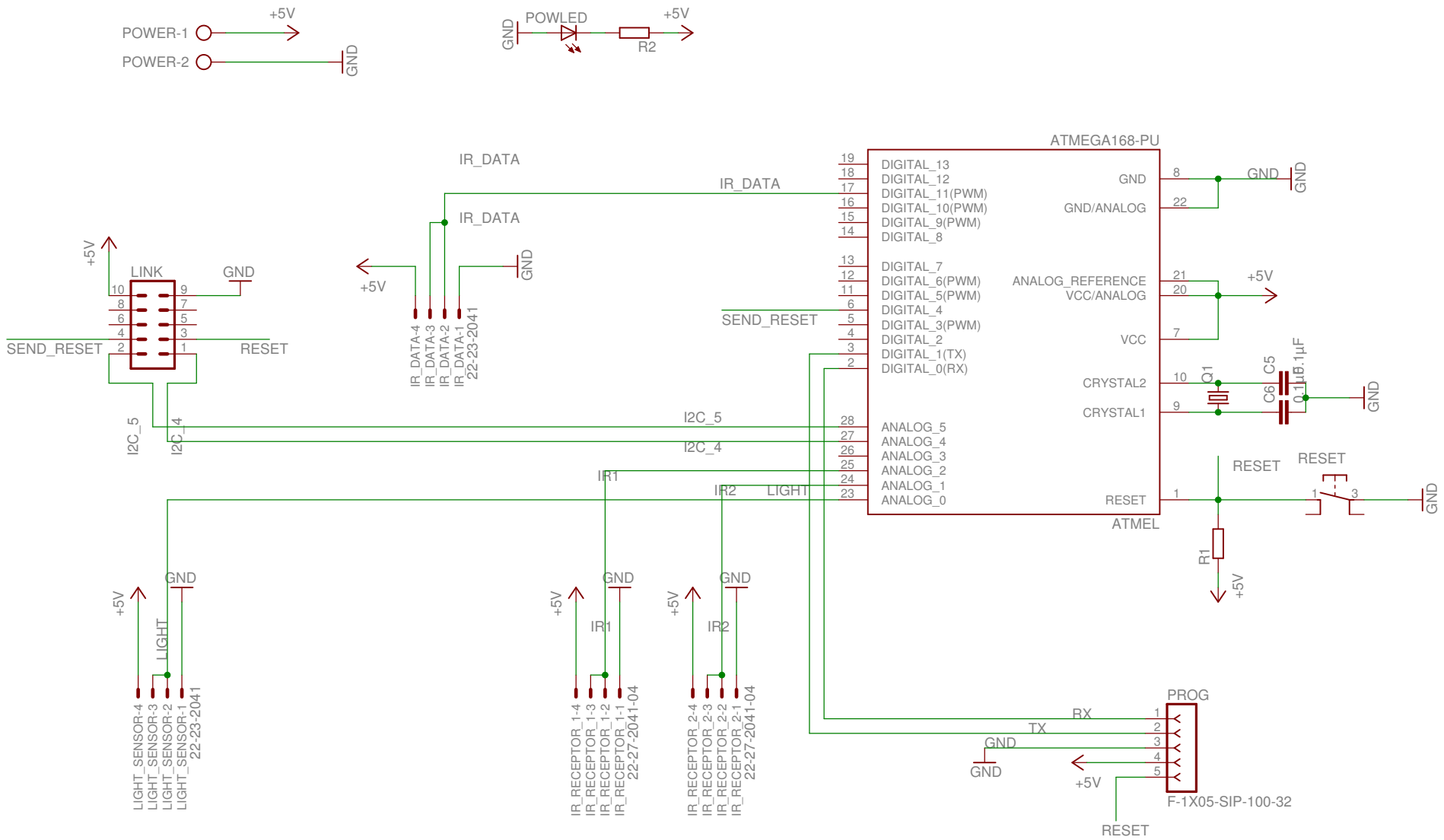
POWER-1
POWER-2
+5V
GND
POWLED
R2
ATMEGA168-PU
DIGITAL_13
DIGITAL_12
DIGITAL_11(PWM)
DIGITAL_10(PWM)
DIGITAL_9(PWM)
DIGITAL_8
DIGITAL_7
DIGITAL_6(PWM)
DIGITAL_5(PWM)
DIGITAL_4
DIGITAL_3(PWM)
DIGITAL_2
DIGITAL_1(TX)
DIGITAL_0(RX)
ANALOG_5
ANALOG_4
ANALOG_3
ANALOG_2
ANALOG_1
ANALOG_0
GND
GND/ANALOG
ANALOG_REFERENCE
VCC/ANALOG
VCC
CRYSTAL2
CRYSTAL1
RESET
ATMEL
IR_DATA
SEND_RESET
LINK
RESET
I2C_5
I2C_4
IR_DATA-4
IR_DATA-3
IR_DATA-2
IR_DATA-1
22-23-2041
Q1
C5
C6
0.1µF
R1
IR1
IR2
LIGHT
LIGHT_SENSOR-4
LIGHT_SENSOR-3
LIGHT_SENSOR-2
LIGHT_SENSOR-1
IR_RECEPTOR_1-4
IR_RECEPTOR_1-3
IR_RECEPTOR_1-2
IR_RECEPTOR_1-1
22-27-2041-04
IR_RECEPTOR_2-4
IR_RECEPTOR_2-3
IR_RECEPTOR_2-2
IR_RECEPTOR_2-1
PROG
RX
TX
F-1X05-SIP-100-32