IOP Conference Series: Materials Science and Engineering

PURPOSE-LED PUBLISHING™

PAPER • **OPEN ACCESS**

Research of shopping recommendation system based on improved wide-depth network

To cite this article: Shanshan Wang 2020 *IOP Conf. Ser.: Mater. Sci. Eng.* **768** 072072

View the article online for updates and enhancements.

You may also like

- Universal black-box attacks against a third-party Alzheimer's diagnostic system
Claudio Sebastián Sigvard, José M Franco and Germán Mato

- Advanced multivariate analysis methods for use by the experiments at the Large Hadron Collider
Anna Stakia

- DeepFocus: a transnasal approach for optimized deep brain stimulation of reward circuit nodes
Yuxin Guo, Mats Forssell, Dorian M Kusyk et al.

This content was downloaded from IP address 155.117.84.189 on 01/04/2026 at 09:55

Research of shopping recommendation system based on improved wide-depth network

Shanshan Wang[1,*]

[1]Anhui Institute of International Business，Hefei, 230011, China

*Corresponding author e-mail: 258693224@qq.com

Abstract. With the development of e-commerce, there are more and more commodities. How to recommend the commodities that users are interested in quickly and accurately has become an important research topic in the field of e-commerce.we propose a product recommendation algorithm based on DeepFM network. Firstly, we embed the user's purchased products, and transform the sparse feature into the low-dimensional dense feature。while the user's personal attribute features can express the user's purchase intention to a certain extent, and also use embedded coding to transform the features.DeepFM considers both wide and deep (i.e. low-level and high-level) at the same time to further improve the generalization ability of the model. So we use DeepFM to predict the interest of users in purchasing goods.Learning the expression of user's interest from user's purchase and personal preference, so as to accurately predict user's purchase behavior.Finally, we use the real record data set purchased by online users to evaluate the effect of the model, and compare it with other models to verify the effectiveness of the model.

1.Introduction

With the "Internet +" era, how to achieve effective recommendation has become a a key problem.At present, most of the recommendation methods are based on user generated information[1]. Although it has good recommendation quality, it is plagued by the sparsity of scoring data.With the increase of user participation, a lot of user generated content (UGC) has been generated.

By analyzing the influence of UGC data, the model is continuously optimized.When users browse products, they may be interested in many products. Among them, the most interesting is the user's historical purchase record, which represents the real purchase items of users on the e-commerce platform.At the same time, the search information of users can also reflect the changes of users' interest points to a certain extent.

Content from this work may be used under the terms of the Creative Commons Attribution 3.0 licence. Any further distribution of this work must maintain attribution to the author(s) and the title of the work, journal citation and DOI.
Published under licence by IOP Publishing Ltd

We select the purchase record and search information as the original input characteristics of users, to capture the diverse interest points of users.

Using embeding method to express user interest in a limited dimension vector will become the bottleneck of user diversity interest.So,it is important to find a way to capture the user's interest in the fixed dimension vector[2].Deep interest network can calculate user interest adaptively through the correlation of user's historical behavior. So, we use deep interest network in purchase records and search behavior can capture diverse user interests.

2.Related work

2.1 Recommendation method based on scoring matrix

User rating data is one of UGC.In the recommendation methods based on scoring data, neighborhood based and model-based are the most typical.On neighborhood recommendation method, how to improve Euclidean distance similarity is usually used to improve the quality of recommendation.On model-based recommendation algorithm, through the mathematical model, estimate the user's rating data, and predict the user's rating of items.At present, the most popular methods :the potential factorization model of factor matrix studied by Koren et al, among which SVD and SVD + + based on SVD are widely used.In addition, salakhutdinov Proposed a matrix decomposition method PMF.The results show that the recommendation quality of the matrix decomposition model is better than the traditional method.

2.2 Recommendation method based on wide and deep network

The wide-depth network [3] aims to make the trained model obtain the ability of memory and generalization at the same time.memorization, which is based on the frequent items in history learning, can explore the correlation. It is to recommend related items based on historical behavior data.Generalization is to explore the combination of new features that have not appeared in history, it can realize the diversity of recommendation.In the recommendation system, memory embodies accuracy, and generalization embodies novelty.

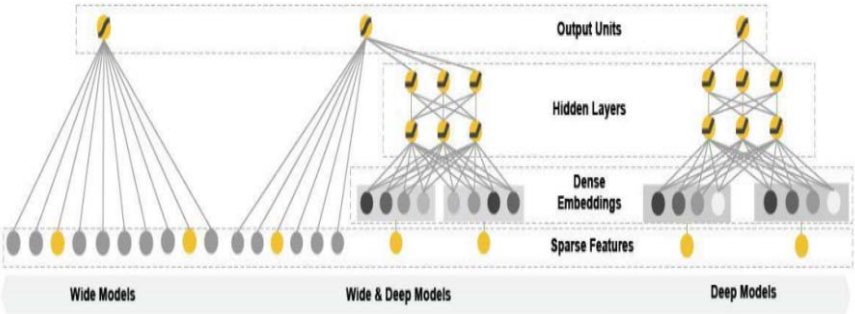

Figure 1: The spectrum of Wide & Deep models

The wide model is shown in the figure on the left .It can be regarded as a generalized linear model:

$$y = w^T x + b$$

Where, the characteristic $y = [x_1, x_2, ..., x_d]$ is a vector of d dimension,

$w = [w_1, w_2,...,w_d]$ is the parameter .

Finally, the sigmoid function is added as the final output based on y.

The deep model is shown in the figure on the right. We can see that the deep model is a feedforward neural network.The input of deep neural network model is usually continuous dense features. For sparse, high-dimensional category features, We usually transform them into low-dimensional vectors for embedded coding.

The calculation method of hidden layer is as follows:

$$a^{(l+1)} = f\left(w^{(l)}a^{(l)} + b^{(l)}\right)$$

Where f is called the activation function, such as R $ReLUs$.

At the same time, we train wide model and Deep model, and their weighted sum is the final prediction result.

$$P(Y = 1|x) = \sigma\left(w_{wide}^{T}[x,\emptyset(x)] + w_{deep}^{T}a^{(l_f)} + b\right)$$

Through the ability of memory and generalization, wide-depth network model can not only remember the information of items that have been purchased, but also capture the diverse interests of users;Moreover, as a feature, embedded coding can solve the problem of data sparsity.Experiments show that the recommendation system based on wide-depth network can achieve a good recommendation effect.

3.Product recommendation system based on DeepFM

Because low-order combined features or high-order combined features may have an impact on the final prediction results,and the wide-depth network does not have a good ability to extract combined features too.The Factorization Machines(FM)is proposed.Because of the complexity of calculation, only the second-order feature combination is used.So,we use DeepFM based product recommendation method, which can capture the basic characteristics of users, and can obtain the combined characteristics to improve the accuracy of prediction.

3.1 feature representation

The most common features is the information features of users, user behavior data, user purchase items and context features.

1. Basic information: gender, age and other static attributes;
2. Purchase items: characteristics of items purchased , but one user may purchase multiple items;

In this way, the input features used in this paper are as follows:

CATEGORY	FEATURE SET	DIMENSION	TYPE
BASIC INFORMATION	gender	2	one-hot
	age	～10	one-hot
	……		
PURCHASE ITEMS	Good ID1	～10^9	multi-hot
	Good ID2	～10^9	multi-hot
	Good ID1	～10^4	multi-hot
	……		

Generally, these features can be transformed into high-dimensional sparse features by coding.

The original features input are one hot and multi-hot types, but when they are input into DNN, there will be too many network parameters.

So,in DeepFM, the original features are divided into different fields, and then embedded coding is carried out on different fields to convert them into Dense Vector.As shown in Figure 2.

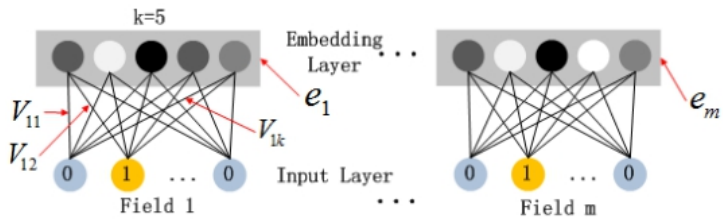

Figure 2. One hot feature converted to dense vector

3.2 DeepFM model

The structure of DeepFM model is shown in the figure, It is divided into two parts, FM and DNN. With the idea of FNN, the embedding is implemented by FM, and the results after embedding are shared by wide and deep.

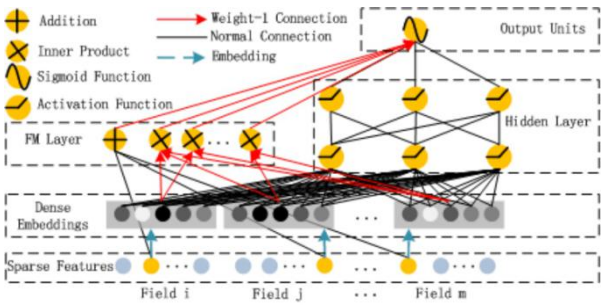

Figure 3.The structure of DeepFM model

The detailed structure of FM is as follows:

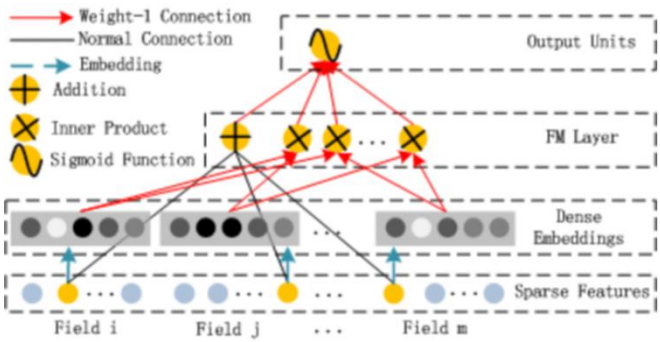

Figure 4. The detailed structure of FM

Through the combination, the model completely simulates the FM effect on the wide, mainly in the process of embedding and also in the form of second-order FM

$$\mathrm{Y} = \sum_{i} w_i x_i + \sum_{i=1}^{n-1} \sum_{j=i+1}^{n} < v_i, v_j > x_i x_j$$

The vector v is the hidden vector. In DNN model, embedding is carried out in the form of FM. The specific derivation is as follows:

$$\sum_{i=1}^{n-1} \sum_{j=i+1}^{n} < v_i, v_j > x_i x_j$$

$$= \frac{1}{2} \sum_{i=1}^{n} \sum_{j=1}^{n} < v_i, v_j > x_i x_j - \frac{1}{2} \sum_{i=1}^{n} < v_i, v_j > x_i x_j$$

$$= \frac{1}{2} \left(\sum_{i=1}^{n} \sum_{j=1}^{n} \sum_{f=1}^{k} v_{i,f} v_{j,f} x_i x_j - \sum_{i=1}^{n} \sum_{f=1}^{k} v_{i,f} v_{i,f} x_i x_i \right)$$

$$= \frac{1}{2} \sum_{f=1}^{k} \left(\left(\sum_{i=1}^{n} v_{i,f} x_i \right) \left(\sum_{j=1}^{n} v_{j,f} x_j \right) - \sum_{i=1}^{n} v_{i,f}^2 x_i^2 \right)$$

$$= \frac{1}{2} \sum_{f=1}^{k} \left(\left(\sum_{i=1}^{n} v_{i,f} x_i \right)^2 - \sum_{i=1}^{n} v_{i,f}^2 x_i^2 \right)$$

The depth part is a feedforward neural network, as shown in the figure . Similar to the FM part, the input is sparse. So, it is also necessary to introduce an embedding layer before the first hidden layer to compress the input vector to the low-dimensional dense vector (Dense Vector).

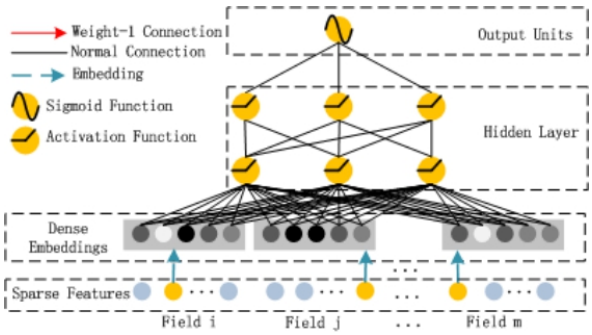

Figure 5.The feedforward neural network

We finally combine the results of DNN and FM to activate the output. we predict the probability of users purchasing goods, and there are many kinds of goods. So, we modify the Deep FM activation layer from sigmoid to softmax.

$$\mathrm{Y} = \mathrm{softmax}(Y_{FM} + Y_{DNN})$$

The users basic information is the input feature of FM. By combining all kinds of high-order features, neural network can extract the features of users' combined information well.And the depth part input the characteristics of the purchased goods, through the generalization ability of DNN,

capture the user's shopping interest preference.Finally, combining the basic information and interest preferences, we can predict the probability of users to some kinds of goods.

4.Experiment and Conclusion

We uses one month's online trading data of e-commerce platform as the training / testing set, with 3 million pieces of data, and the proportion of positive and negative examples is 1:1 .

Among them, time dimension is used as the segmentation criterion of training / test set, the first 25 days' user data is used as the training set, about 2.6 million pieces, and the last 5 days' data is used as the test set, about 400000 pieces; open source tool tensorflow is used for model training.

As time goes on, users' shopping interests are changing, and most of them are short-term interests.Therefore, iterative training data and test data on the time axis can effectively capture users' short-term interest, and the data validation model of the time axis can better reflect the model effect in the real environment.

We select recall rate, accuracy and F1 as the indicators to measure the effect of the model.Due to the large number of items, we only select the specific products of five categories (mother and baby, sporting goods, electronic products, books, cosmetics) as the prediction target.

At the same time, the results of wide-depth network and DNN in the same data set are compared. From the results, it can be seen that the recommended effect based on DeepFM is better than that based on separate FM and DNN models.

Among them, the female preference of mother and infant and cosmetics is mostly, so the classification effect is better than the other two categories.

Table 1 comparison of recall rate

	DeepFM	DNN	Wide& Deep
Mother and baby	0.82	0.69	0.71
Sports	0.80	0.65	0.77
Electronics	0.79	0.62	0.65
Books	0.75	0.67	0.67
Cosmetics	0.81	0.70	0.76

Table 2 accuracy comparison

	DeepFM	DNN	Wide& Deep
Mother and baby	0.86	0.67	0.70
Sports	0.81	0.69	0.78
Electronics	0.82	0.65	0.74
Books	0.80	0.69	0.65
Cosmetics	0.83	0.74	0.71

Table 3 F1 effect comparison

	DeepFM	DNN	Wide& Deep
Mother and baby	0.81	0.68	0.70
Sports	0.80	0.67	0.77
Electronics	0.80	0.64	0.69
Books	0.77	0.67	0.66
Cosmetics	0.82	0.72	0.73

5.Summary

We propose a recommendation system based on DeepFM, which is used to solve the problem of how to accurately push the products of interest for users in the e-commerce platform with massive data.

Firstly, emmbedding is used to transform sparse one-hot/multi-hot features into dense vectors, so that the feature dimension is fixed in a certain dimension space;

Then, using the wide-depth network, the user information is applied to the wide network, the purchased goods are applied to the deep network, and FM technology is introduced to realize the high-order feature combination in the wide network part, so that the network can further mine the performance improvement brought by the feature combination.

Finally, we compare the effects of DeepFM, DNN and WDN. From the experimental data, each index of DeepFM has obvious advantages, which verifies the effectiveness of the effect.

References

[1] Paul Covington, Jay Adams, and Emre Sargin. 2016. Deep neural networks for youtube recommendations. In Proceedings of the 10th ACM Conference on Recommender Systems. ACM, 191–198.

[2] Dzmitry Bahdanau, Kyunghyun Cho, and Yoshua Bengio. 2015. Neural Machine Translation by Jointly Learning to Align and Translate. In Proceedings of the 3rd International Conference on Learning Representations.

[3] Cheng H. et al. 2016. Wide & deep learning for recommender systems. In Pro- ceedings of the 1st Workshop on Deep Learning for Recommender Systems. ACM.

[4] Huifeng Guo, Ruiming Tang, et al. 2017. DeepFM: A Factorization-Machine based Neural Network for CTR Prediction. In Proceedings of the 26th International Joint Conference on Artificial Intelligence. 1725–1731.

[5] Steffen Rendle. 2010. Factorization machines. In Proceedings of the 10th International Conference on Data Mining. IEEE, 995–1000.