ITEM	QTY	DESCRIPTION	MATERIAL	PART NO.	DRAWING NO.	TOTAL WT. (KG)
1	1	STATOR LEG - MACHINING	DUCTILE IRON	605706	605706	87.5
2	1	ELASTOMER COVERING	SEE SCHEDULE			7.7

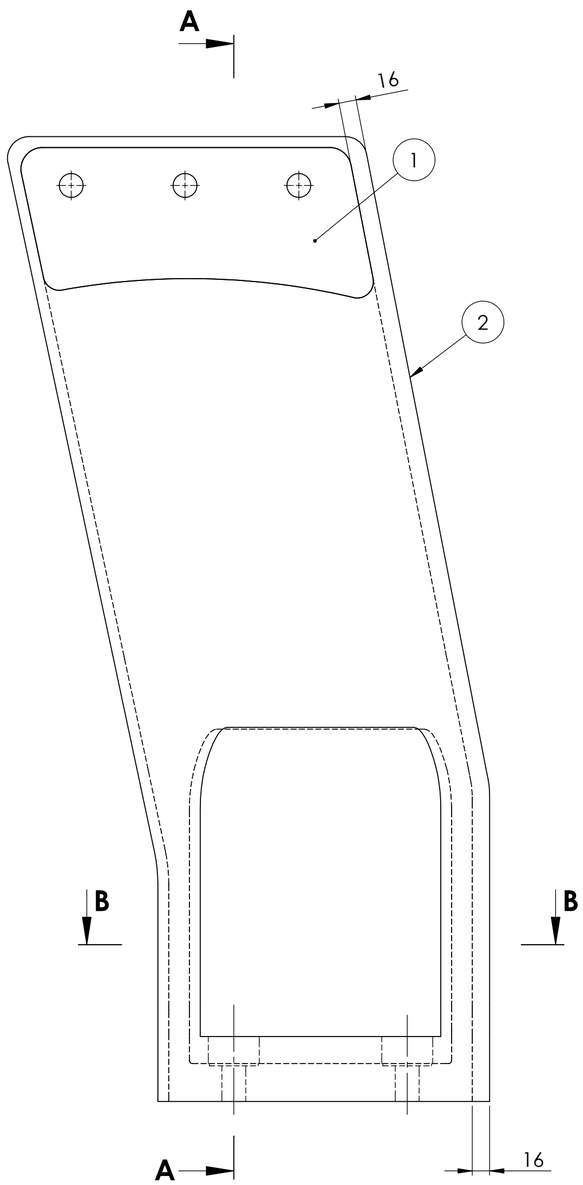

SECTION A-A

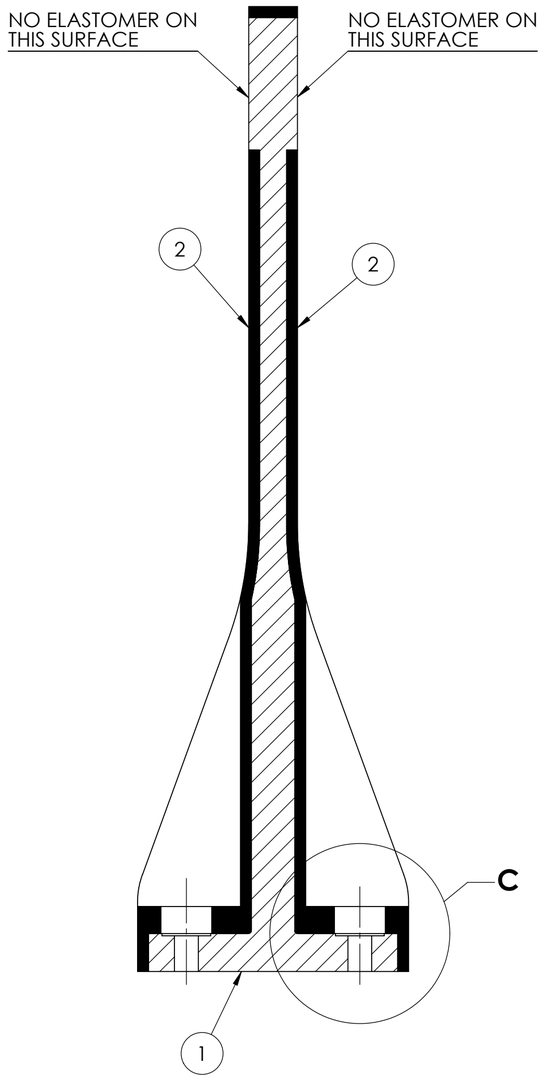

ELASTOMER COVERING SCHEDULE		
PART NO.	MATERIAL	MATERIAL SPECIFICATION DRAWING
605707-01	NATURAL RUBBER	900417
605707-02	NEOPRENE	900419
605707-03	M.O.R. RUBBER	1125537
605707-04	URETHANE	905200

DETAIL C

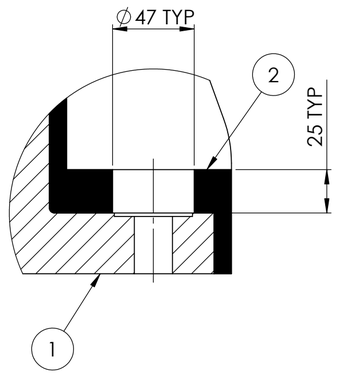

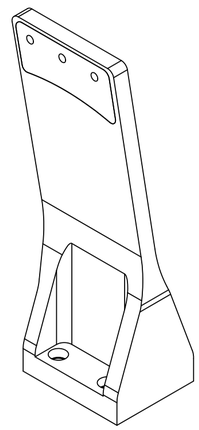

SECTION B-B

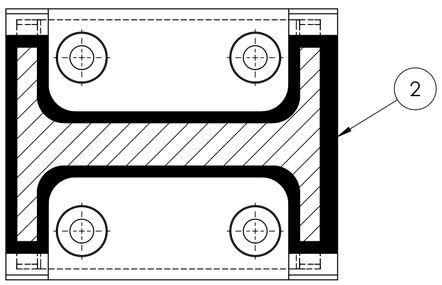

Notes:

1. All dimensions are in millimeters unless noted otherwise.
2. All elastomer covering to be 10mm thick unless noted otherwise. No elastomer covering in bolt holes. All overlaps must be grounded flat.

Total approximate mass: 95 kg

1	SIPN	AC	28JAN11	Initial Release - ECN 43762
Scale	Drawn	Appr.	Appr. Date	Zone/Description
NTS	SIPN	AC	28JAN11	Sheet Size: A2 / Sheet 1 of 1

STATOR LEG - ELASTOMER COVERING
36RS
DORR-OLIVER FLOTATION

Mat.: NA | Weight: NA | Welds: NA | ISO-A

COPYRIGHT © 2010 FLSMIDTH A/S. ALL RIGHTS RESERVED
PROPERTY OF FLSMIDTH A/S. THIS DRAWING CONTAINS CONFIDENTIAL AND PROPRIETARY INFORMATION OF FLSMIDTH A/S AND MAY ONLY BE USED FOR THE LIMITED PURPOSES OF EVALUATING PROPOSALS OR INSTALLING, OPERATING OR MAINTAINING FLSMIDTH EQUIPMENT. DISCLOSURE, DUPLICATION, MODIFICATION, OR OTHER USE OF THIS DRAWING IS NOT PERMITTED WITHOUT THE PRIOR WRITTEN PERMISSION OF FLSMIDTH A/S.

Original S.O. STANDARD
Ref. From

FLSMIDTH No.: 605707 Rev.: 1