PART NO.	MATERIAL	DESCRIPTION / REMARKS	TOTAL WEIGHT
47992A	1	GROMMET - INSIDE DIAMETER = 5"	
47992B	1	GROMMET - INSIDE DIAMETER = 4"	
47992C	1	GROMMET - INSIDE DIAMETER = 3"	
47992D	2	GROMMET - INSIDE DIAMETER = 5"	
47992E	2	GROMMET - INSIDE DIAMETER = 4"	
47992F	2	GROMMET - INSIDE DIAMETER = 3"	

NOTE:

1. NEOPRENE PER EIMCO SPEC. No. 900419
2. SPECIAL NEOPRENE PER EIMCO SPEC. No. 906162

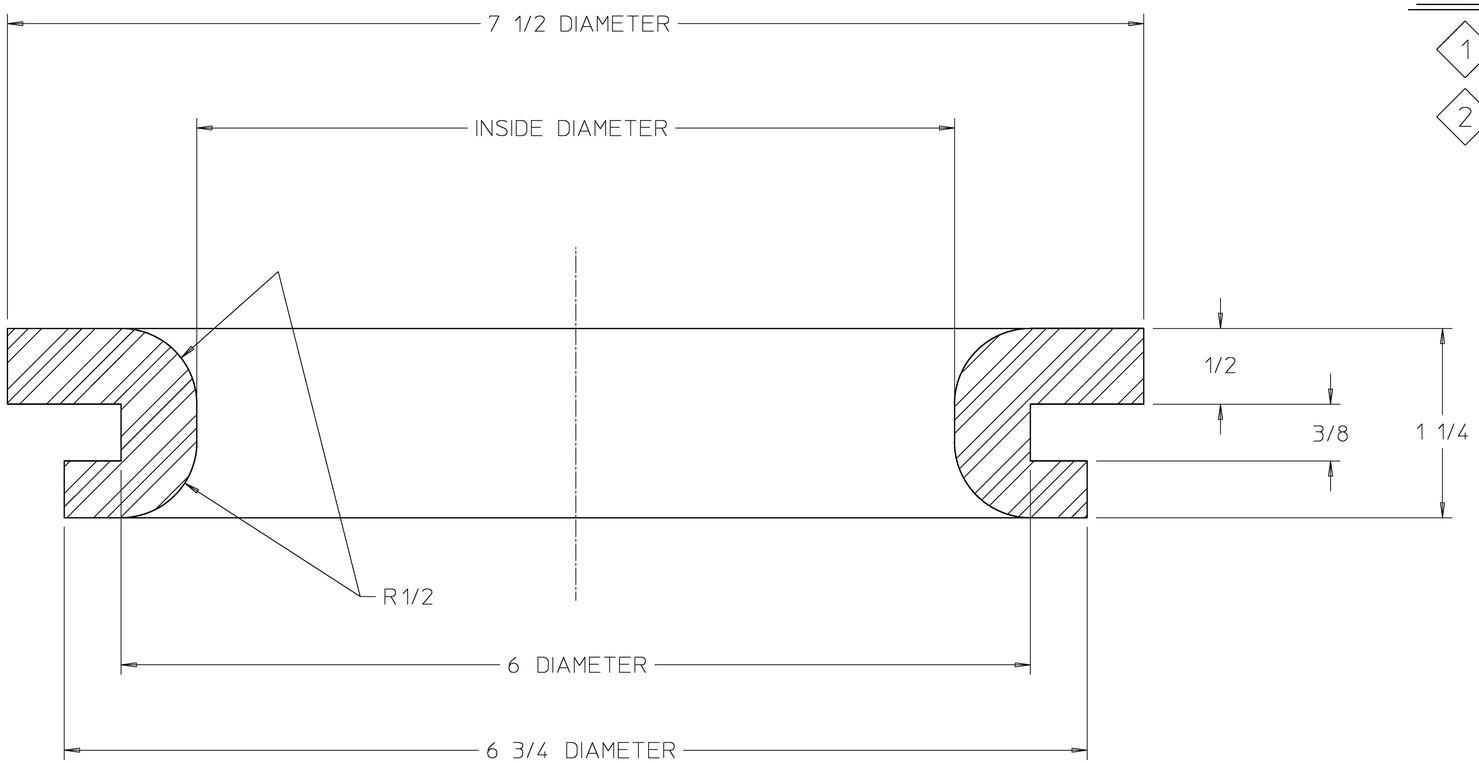

REVISION	EN	BY	APPR.	DATE	
ADDED PARTS D,E,F	19698	MDA	SC	4-16-03	E
CHANGED MATERIAL SPECIFICATION	98-0291	SH	AC	1-28-98	D
DUROMETER WAS 50 WITH NO TOLERANCE	96-1390	DM	BDD	12-16-96	C
ADDED EIMCO SPEC. NO. TO MATERIAL NOTE	95-5248	L.B.N.	LETEL	5-10-95	B
INITIAL RELEASE					A

EIMCO®

This drawing and all information thereon is the property of Eimco Process Equipment and is confidential and must not be made public or copied. This drawing is loaned subject to return upon demand and is not to be used directly or indirectly in any way detrimental to our interests.

© COPYRIGHT 1996 BY EIMCO PROCESS EQUIPMENT ALL RIGHTS RESERVED
QFORM-0114-05008 Rev B (2/96)

DO NOT SCALE PRINTS	FILE SPEC.	47992	REF. FROM
DATE	3-1-65	GROMMET	A.D.N.
DRAWN	KALBERG		
CHECK'D	T.O.S.	WEMCO FLOTATION	DWG. No. 47992 REV E
APPR.	J.B.L.		