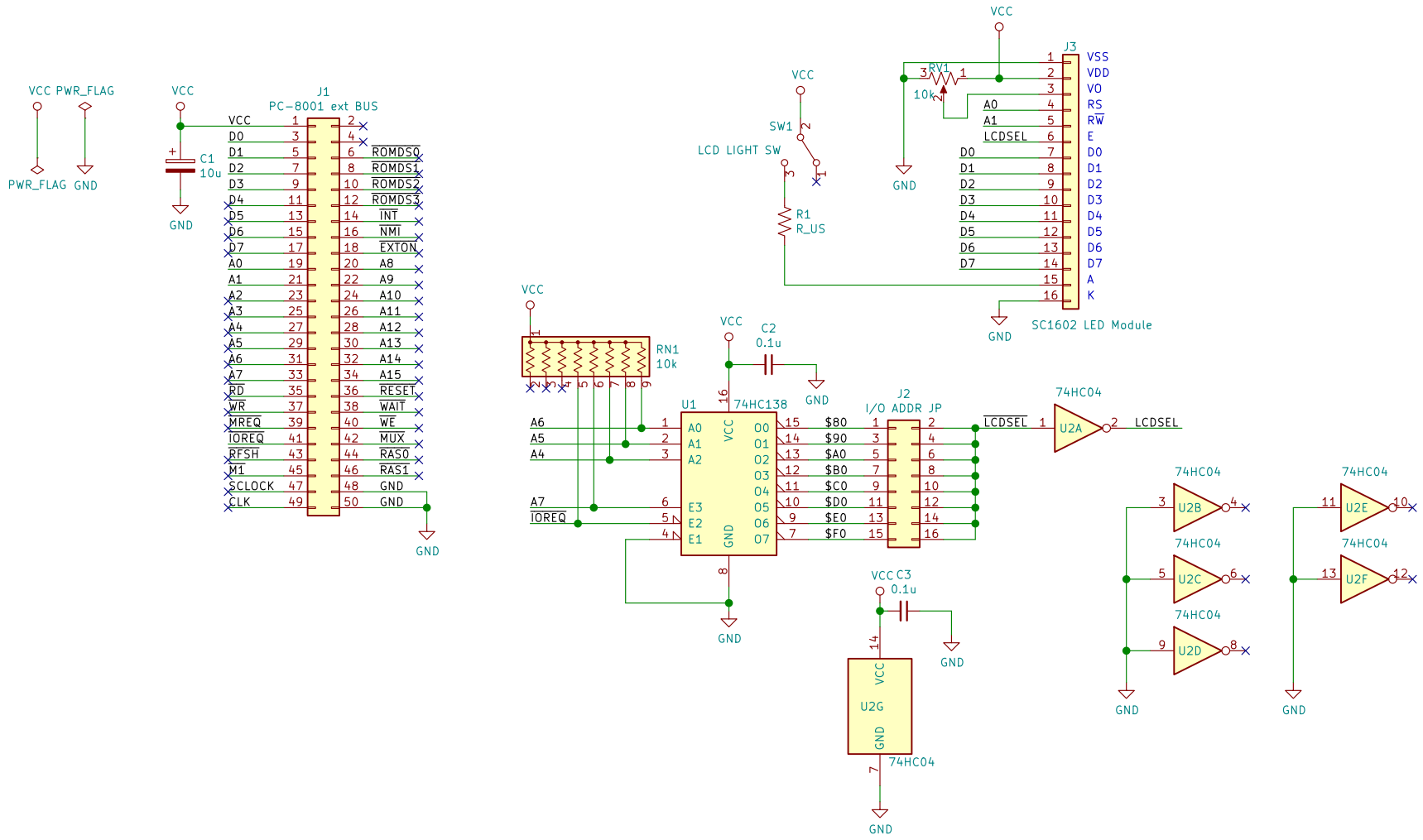

KUNI-NET

Sheet: /

File: PC8001-SC1602.sch

Title: PC-8001 LCD SC1602 BOARD

Size: A4	Date: 2020-02-12	**Rev: 1**
KiCad E.D.A. kicad (5.1.4-0)		Id: 1/1