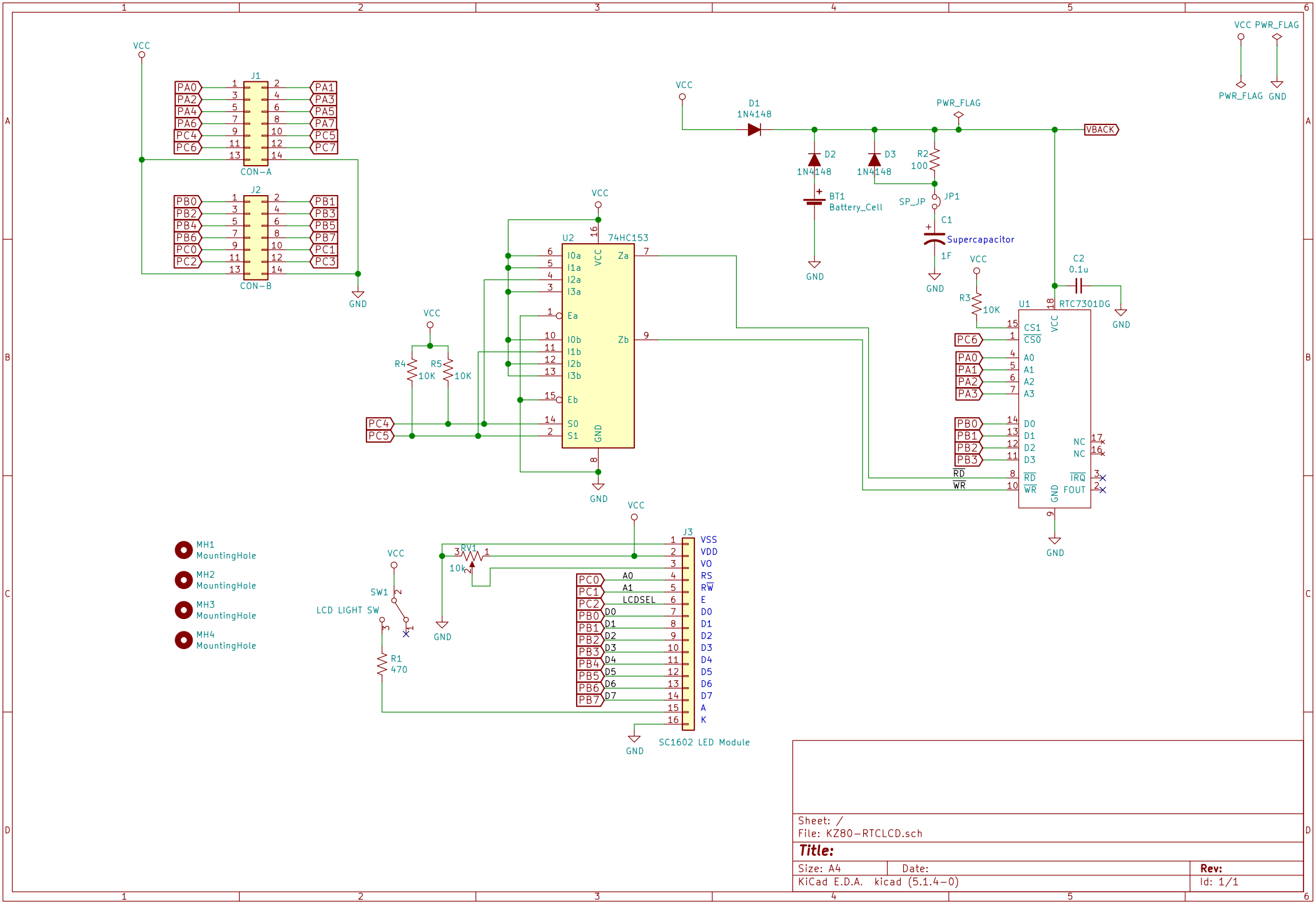
VCC
J1
PA0
PA2
PA4
PA6
PC4
PC6
PA1
PA3
PA5
PA7
PC5
PC7
CON-A
J2
PB0
PB2
PB4
PB6
PC0
PC2
PB1
PB3
PB5
PB7
PC1
PC3
CON-B
GND
D1
1N4148
D2
1N4148
D3
1N4148
R2
100
PWR_FLAG
VBACK
BT1
Battery_Cell
SP_JP
JP1
C1
Supercapacitor
1F
C2
0.1u
U2
74HC153
I0a
I1a
I2a
I3a
Ea
I0b
I1b
I2b
I3b
Eb
S0
S1
Za
Zb
R4
10K
R5
10K
R3
10K
U1
RTC7301DG
CS1
CS0
A0
A1
A2
A3
D0
D1
D2
D3
RD
WR
NC
IRQ
FOUT
MH1
MountingHole
MH2
MountingHole
MH3
MountingHole
MH4
MountingHole
RV1
10k
SW1
LCD LIGHT SW
R1
470
J3
VSS
VDD
VO
RS
RW
E
D0
D1
D2
D3
D4
D5
D6
D7
A
K
A0
A1
LCDSEL
SC1602 LED Module
Sheet: /
File: KZ80-RTCLCD.sch
Title:
Size: A4
Date:
Rev:
KiCad E.D.A. kicad (5.1.4-0)
Id: 1/1