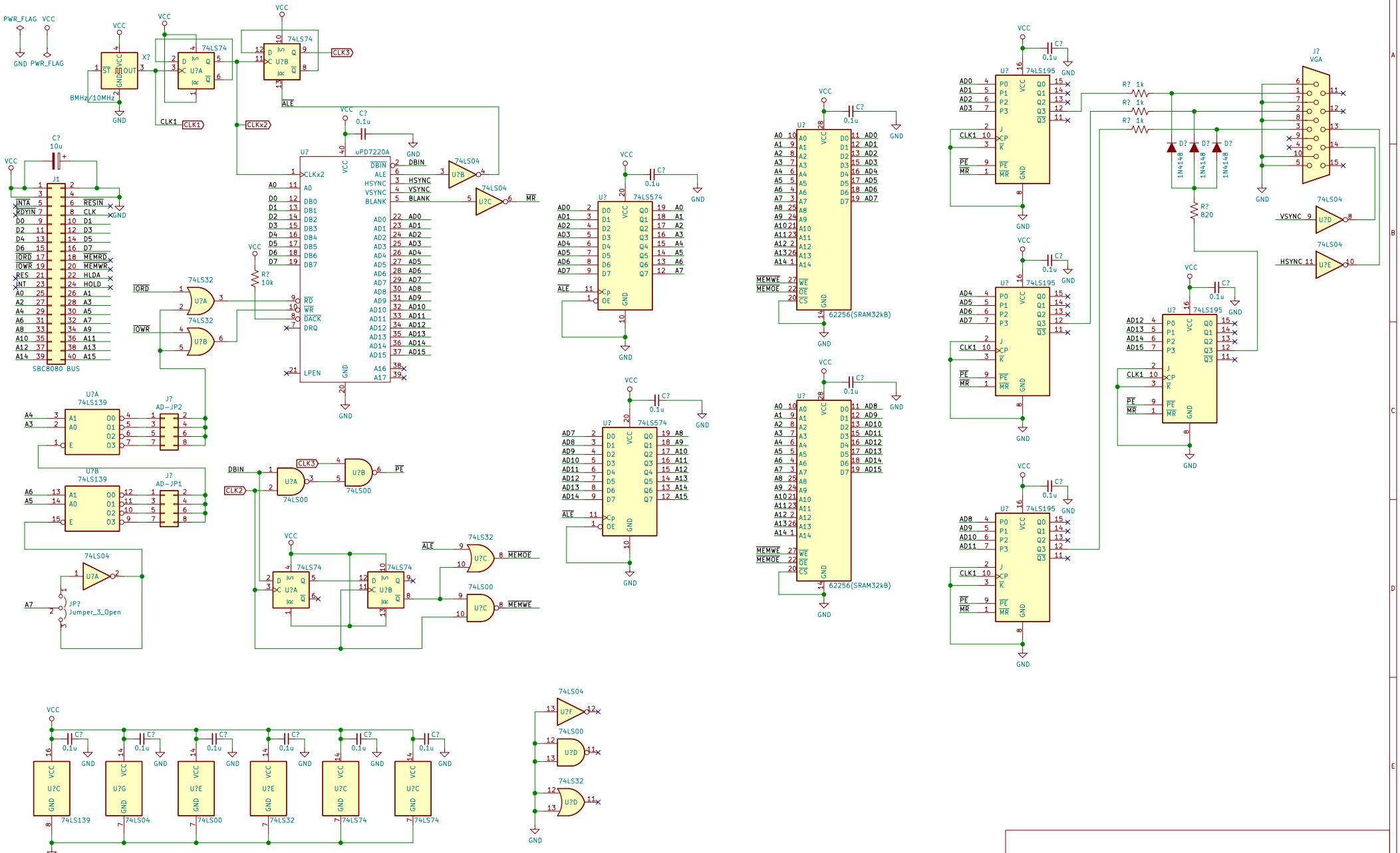

KUNI-NET

Sheet: /

File: KZ80-uPD7200.sch

Title: KZ80 uPD7200 Board

Size: A3	Date: 2020-06-02	Rev: 1
KiCad E.D.A. kicad (5.1.5-0-10_14)		Id: 1/1