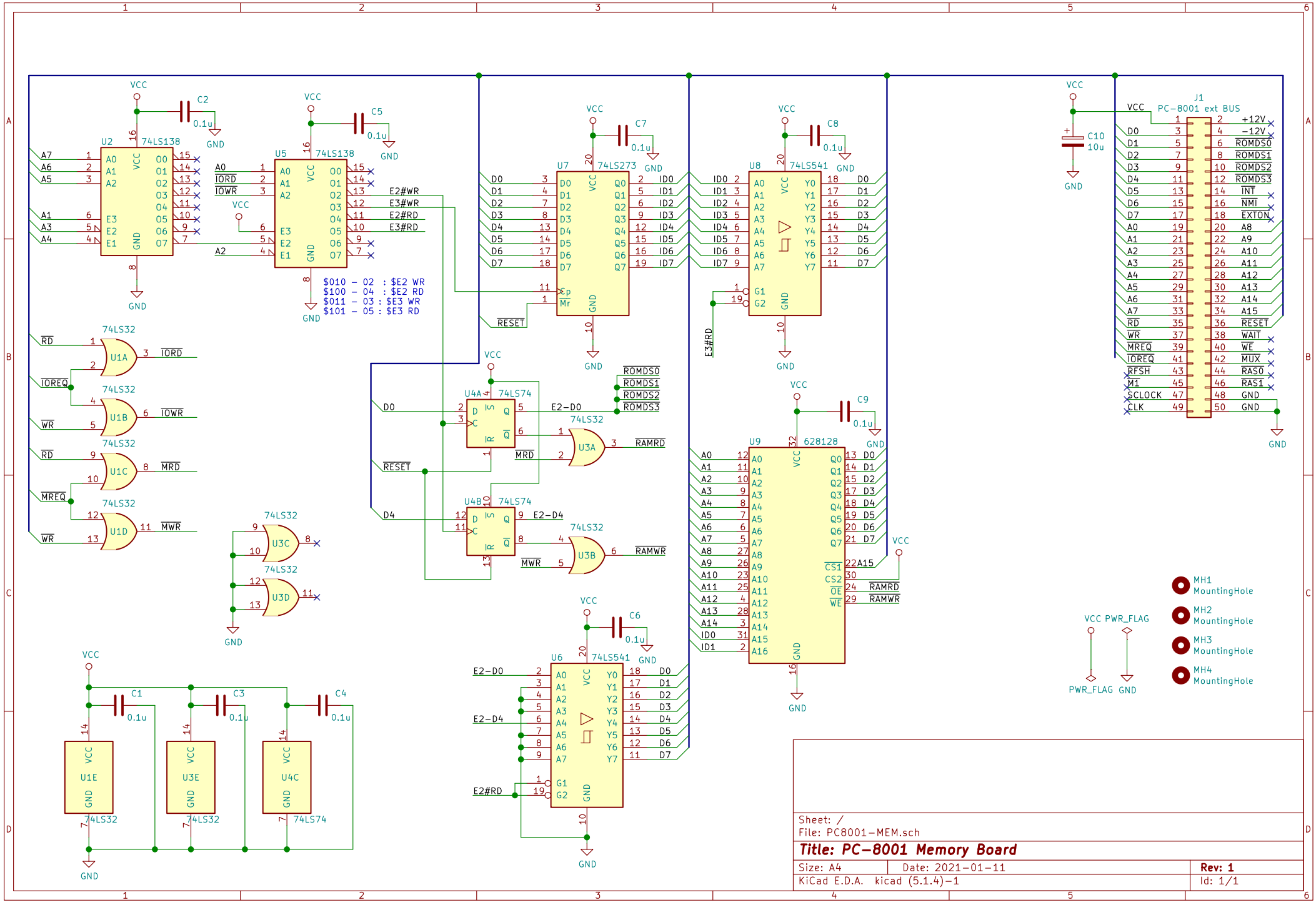
U2 74LS138
U5 74LS138
$010 – 02 : $E2 WR
$100 – 04 : $E2 RD
$011 – 03 : $E3 WR
$101 – 05 : $E3 RD
U7 74LS273
U8 74LS541
U9 628128
U6 74LS541
U4A 74LS74
U4B 74LS74
J1 PC-8001 ext BUS
MH1 MountingHole
MH2 MountingHole
MH3 MountingHole
MH4 MountingHole
Sheet: /
File: PC8001-MEM.sch
Title: PC-8001 Memory Board
Size: A4
Date: 2021-01-11
Rev: 1
KiCad E.D.A. kicad (5.1.4)-1
Id: 1/1