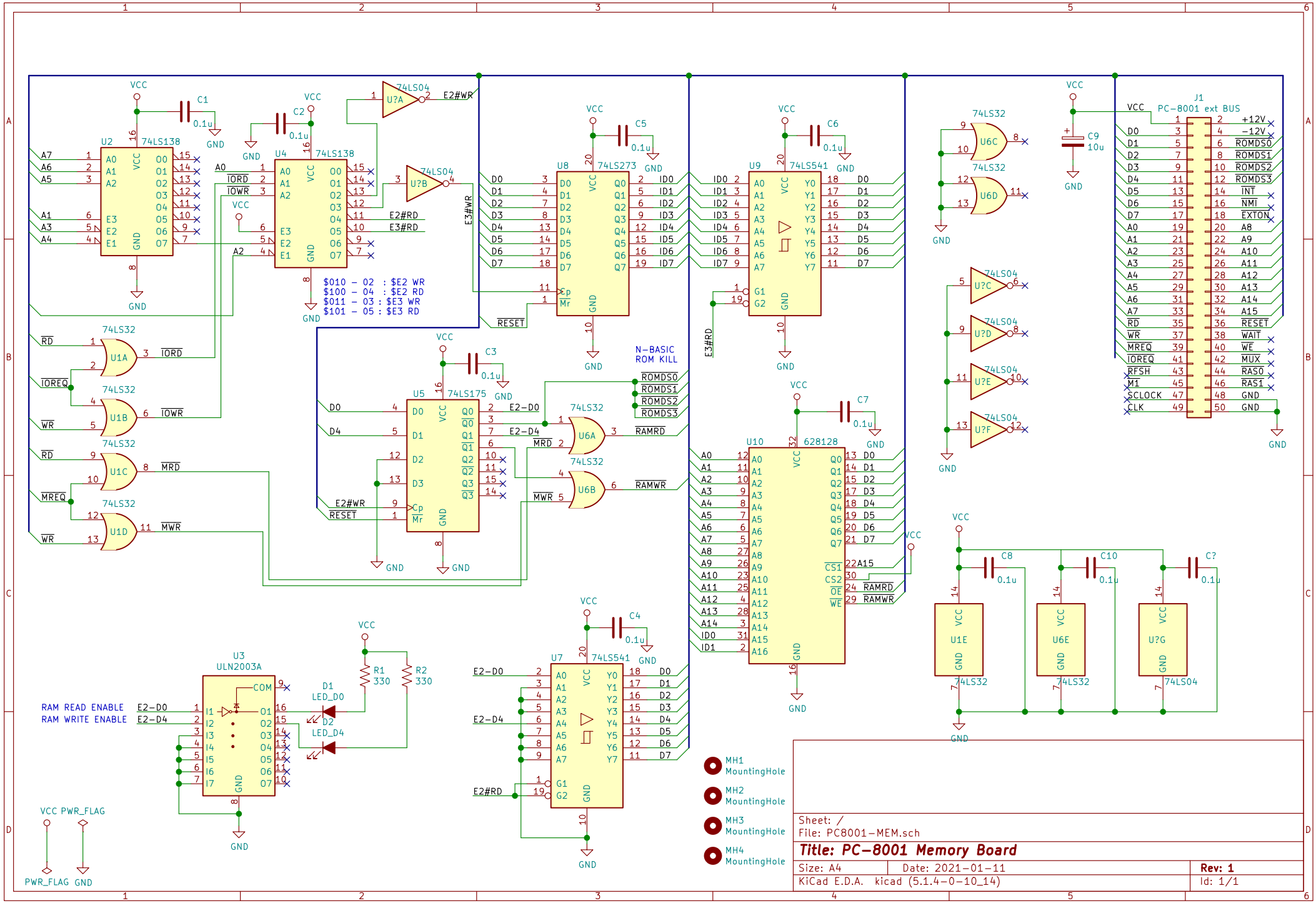
U2 74LS138
U4 74LS138
U8 74LS273
U9 74LS541
U5 74LS175
U6A 74LS32
U6B 74LS32
U1A 74LS32
U1B 74LS32
U1C 74LS32
U1D 74LS32
U?A 74LS04
U?B 74LS04
U6C 74LS32
U6D 74LS32
U?C 74LS04
U?D 74LS04
U?E 74LS04
U?F 74LS04
U10 628128
U7 74LS541
U3 ULN2003A
U1E 74LS32
U6E 74LS32
U?G 74LS04
J1 PC-8001 ext BUS
$010 – 02 : $E2 WR
$100 – 04 : $E2 RD
$011 – 03 : $E3 WR
$101 – 05 : $E3 RD
N-BASIC ROM KILL
RAM READ ENABLE E2-D0
RAM WRITE ENABLE E2-D4
LED_D0
LED_D4
MH1 MountingHole
MH2 MountingHole
MH3 MountingHole
MH4 MountingHole
VCC PWR_FLAG
PWR_FLAG GND
Sheet: /
File: PC8001-MEM.sch
Title: PC-8001 Memory Board
Size: A4
Date: 2021-01-11
Rev: 1
KiCad E.D.A. kicad (5.1.4-0-10_14)
Id: 1/1