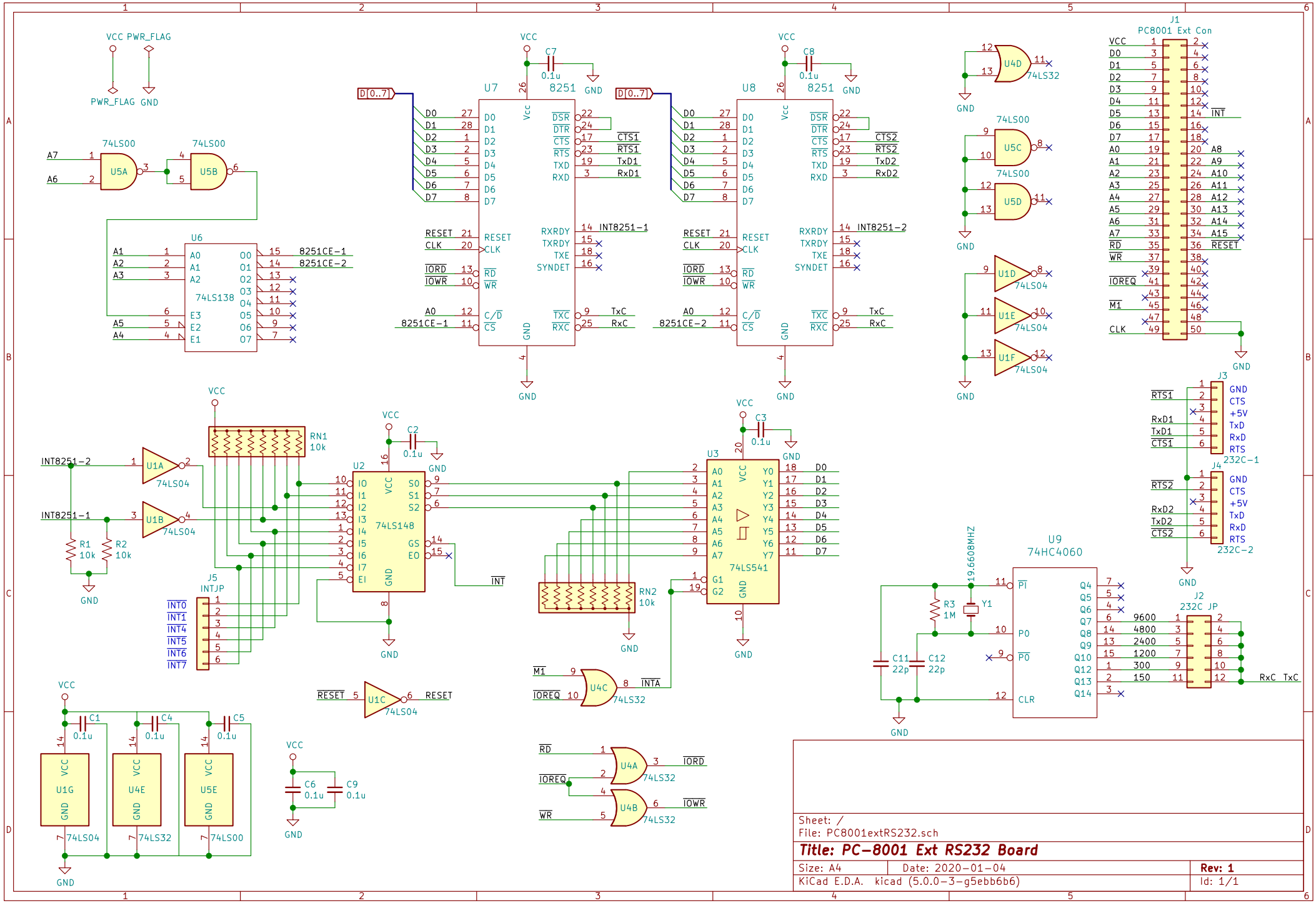

Sheet: /
File: PC8001extRS232.sch

Title: PC-8001 Ext RS232 Board

Size: A4	Date: 2020-01-04	Rev: 1
KiCad E.D.A. kicad (5.0.0-3-g5ebb6b6)		Id: 1/1