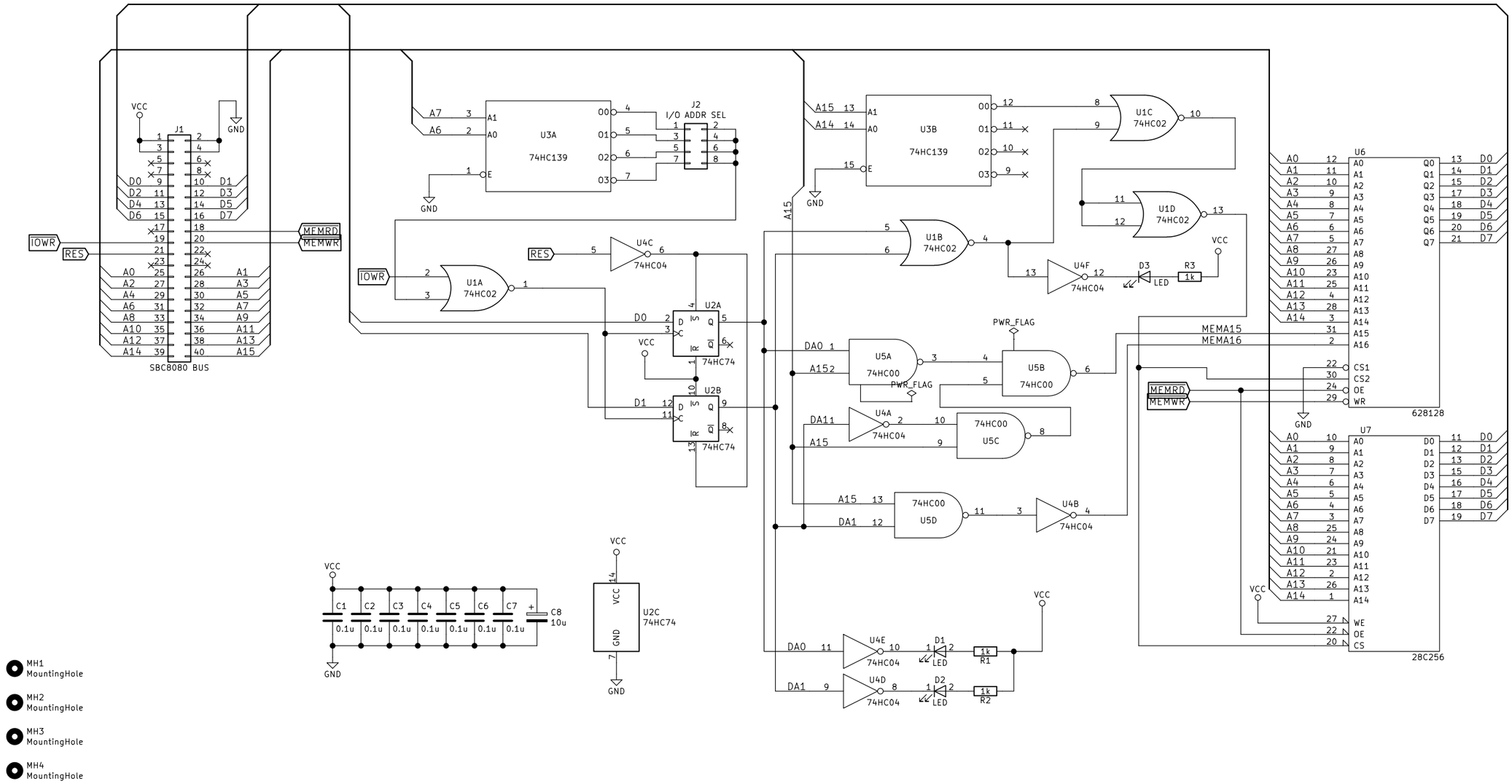

Sheet: /
File: Z80-1MSRAM.sch

Title: SBC8080 128k MEMORY BOARD

Size: A3	Date: 2018-11-29	Rev: 2
KiCad E.D.A. kicad (5.0.0-3-g5ebb6b6)		Id: 1/1