DRAFT INTERNATIONAL STANDARD

ISO/DIS 23150

ISO/TC **22**/SC **31**

Secretariat: **DIN**

Voting begins on:
2020-05-22

Voting terminates on:
2020-08-14

Road vehicles — Data communication between sensors and data fusion unit for automated driving functions — Logical interface

Véhicules routiers - Communication de données entre capteurs et unité de fusion de données pour les fonctions de conduite automatisée - Interface logique

ICS: 43.040.15

THIS DOCUMENT IS A DRAFT CIRCULATED FOR COMMENT AND APPROVAL. IT IS THEREFORE SUBJECT TO CHANGE AND MAY NOT BE REFERRED TO AS AN INTERNATIONAL STANDARD UNTIL PUBLISHED AS SUCH.

IN ADDITION TO THEIR EVALUATION AS BEING ACCEPTABLE FOR INDUSTRIAL, TECHNOLOGICAL, COMMERCIAL AND USER PURPOSES, DRAFT INTERNATIONAL STANDARDS MAY ON OCCASION HAVE TO BE CONSIDERED IN THE LIGHT OF THEIR POTENTIAL TO BECOME STANDARDS TO WHICH REFERENCE MAY BE MADE IN NATIONAL REGULATIONS.

RECIPIENTS OF THIS DRAFT ARE INVITED TO SUBMIT, WITH THEIR COMMENTS, NOTIFICATION OF ANY RELEVANT PATENT RIGHTS OF WHICH THEY ARE AWARE AND TO PROVIDE SUPPORTING DOCUMENTATION.

This document is circulated as received from the committee secretariat.

Reference number
ISO/DIS 23150:2020(E)

© ISO 2020

Copyright International Organization for Standardization
Provided by IHS Markit under license with ANSI
No reproduction or networking permitted without license from IHS
Order Number: W2233726
Sold to:APTIV [222021100001] - RUTH.M.MONTANO@APTIV.COM,
Not for Resale,2020-08-07 18:02:38 UTC

COPYRIGHT PROTECTED DOCUMENT

© ISO 2020

All rights reserved. Unless otherwise specified, or required in the context of its implementation, no part of this publication may be reproduced or utilized otherwise in any form or by any means, electronic or mechanical, including photocopying, or posting on the internet or an intranet, without prior written permission. Permission can be requested from either ISO at the address below or ISO's member body in the country of the requester.

ISO copyright office
CP 401 • Ch. de Blandonnet 8
CH-1214 Vernier, Geneva
Phone: +41 22 749 01 11
Fax: +41 22 749 09 47
Email: copyright@iso.org
Website: www.iso.org

Published in Switzerland

--`,,,`,,,,`,`,`,``````,-`-`,,`,,`,`---

© ISO 2020 – All rights reserved

Copyright International Organization for Standardization
Provided by IHS Markit under license with ANSI
No reproduction or networking permitted without license from IHS

Order Number: W2233726
Sold to:APTIV [222021100001] - RUTH.M.MONTANO@APTIV.COM,
Not for Resale,2020-08-07 18:02:38 UTC

Contents

Page

Foreword ... xi

Introduction ... xii

1 Scope ... 1

2 Normative references ... 1

3 Terms and definitions ... 1
3.1 Architectural components ... 1
3.2 Level of detail ... 2
3.3 Structure ... 3
3.4 Measurement ... 3
3.5 Requirement level ... 4
3.6 Interfaces ... 5
3.7 Axis and coordinate systems ... 7

4 Symbols and abbreviated terms ... 11

5 Structure of the interface description ... 12
5.1 Signal ... 12
5.2 Interface ... 13
5.3 Logical signal group ... 15
5.4 Profile: <...> ... 15

6 Logical interface from a sensor to a fusion unit ... 16
6.1 Generic interface header ... 18
6.2 Generic interface entity ... 18
6.3 Profile: Uniqueness ... 18

7 Object level ... 18
7.1 Generic object level interface ... 19
7.1.1 Generic object level header ... 19
7.1.2 Generic object level entity ... 20
7.2 Potentially moving object interface ... 21
7.2.1 Potentially moving object header ... 25
7.2.2 Potentially moving object entity ... 26
7.3 Road object interface ... 28
7.3.1 Road object header ... 35
7.3.2 Road object entity ... 36
7.4 Static object interface ... 38
7.4.1 Static object header ... 45
7.4.2 Static object entity ... 45

8 Feature level ... 47
8.1 Generic sensor feature interface ... 48
8.1.1 Generic sensor feature header ... 49
8.1.2 Generic sensor feature entity ... 49
8.2 Camera feature interface ... 50
8.2.1 Camera feature header ... 52
8.2.2 Camera feature entity ... 53
8.3 Ultrasonic feature interface ... 54

© ISO 2020 – All rights reserved

Copyright International Organization for Standardization
Provided by IHS Markit under license with ANSI
No reproduction or networking permitted without license from IHS

Order Number: W2233726
Sold to:APTIV [222021100001] - RUTH.M.MONTANO@APTIV.COM,
Not for Resale,2020-08-07 18:02:38 UTC

8.3.1 Ultrasonic feature header ... 56
8.3.2 Ultrasonic feature entity ... 57

9 Detection level ... 57
9.1 Generic sensor detection interface ... 58
9.1.1 Generic sensor detections header ... 58
9.1.2 Generic sensor detections entity ... 58
9.2 Radar detection interface ... 59
9.2.1 Radar detections header ... 61
9.2.2 Radar detections entity ... 62
9.2.3 Profile: Radar ambiguity ... 63
9.3 Lidar detection interface ... 63
9.3.1 Lidar detection header ... 65
9.3.2 Lidar detection entity ... 65
9.4 Camera detection interface ... 66
9.4.1 Camera detection header ... 68
9.4.2 Camera detection entity ... 69
9.5 Ultrasonic detection interface ... 70
9.5.1 Ultrasonic detection header ... 71
9.5.2 Ultrasonic detection entity ... 72

10 Supportive sensor interfaces ... 73
10.1 Generic supportive sensor interface ... 74
10.1.1 Generic supportive sensor header ... 74
10.1.2 Generic supportive sensor entity ... 75
10.2 Sensor performance interface ... 75
10.2.1 Sensor performance header ... 78
10.2.2 Sensor performance entity ... 80
10.3 Sensor health information interface ... 80
10.3.1 Sensor health information header ... 82
10.3.2 Sensor health information entity ... 83

Annex A (normative) Interface signals ... 84
A.1 Header signals ... 84
A.1.1 Version ID {major, minor, patch} ... 84
A.1.2 Sensor ID ... 84
A.1.3 Interface ID ... 85
A.1.4 Time stamp – <...> ... 85
A.1.5 <...> counter ... 86
A.1.6 Interface cycle time ... 87
A.1.7 Interface cycle time – variation ... 88
A.1.8 Data qualifier ... 88
A.1.9 Recognized <...> – capability ... 89
A.1.10 Recognized <...> – status ... 91
A.1.11 Number of valid <...> ... 93
A.1.12 Tracking motion model ... 97
A.1.13 Motion type ... 98
A.1.14 Colour model type ... 98
A.1.15 Radial velocity ambiguity domain {begin, end} ... 99
A.1.16 Range ambiguity domain {begin, end} ... 99
A.1.17 Angle azimuth ambiguity domain {begin, end} ... 99
A.1.18 Angle elevation ambiguity domain {begin, end} ... 99
A.1.19 Scope of interface ... 100
A.1.20 Vehicle coordinate system type ... 100

© ISO 2020 – All rights reserved

Copyright International Organization for Standardization
Provided by IHS Markit under license with ANSI
No reproduction or networking permitted without license from IHS

Order Number: W2233726
Sold to:APTIV [222021100001] - RUTH.M.MONTANO@APTIV.COM,
Not for Resale,2020-08-07 18:02:38 UTC

A.1.21 Sensor origin position {x, y, z} ... 101
A.1.22 Sensor origin position – error {x, y, z} ... 101
A.1.23 Sensor orientation {yaw, pitch, roll} ... 101
A.1.24 Sensor orientation – error {yaw, pitch, roll} ... 102
A.1.25 Vanishing point {azimuth, elevation} ... 102
A.1.26 Vanishing point – error {azimuth, elevation} ... 103
A.2 Object level entity signals ... 103
A.2.1 Object ID ... 104
A.2.2 Object grouping ID ... 104
A.2.3 Age ... 105
A.2.4 Observation – object level ... 105
A.2.5 Track quality ... 105
A.2.6 Measurement status – object level ... 106
A.2.7 Reference point ... 107
A.2.8 Position {x, y, z} ... 109
A.2.9 Position – error {x, y, z} ... 109
A.2.10 Orientation {yaw, pitch, roll} ... 110
A.2.11 Orientation – error {yaw, pitch, roll} ... 110
A.2.12 Velocity {x, y, z} ... 110
A.2.13 Velocity – error {x, y, z} ... 111
A.2.14 Acceleration {x, y, z} ... 111
A.2.15 Acceleration – error {x, y, z} ... 111
A.2.16 Kinematic point {x, y, z} ... 111
A.2.17 Kinematic point – error {x, y, z} ... 112
A.2.18 Orientation rate kinematic point {yaw} ... 112
A.2.19 Orientation rate kinematic point – error {yaw} ... 112
A.2.20 Road level ... 112
A.2.21 Movement status ... 113
A.2.22 Dimension {length, width, height} ... 114
A.2.23 Dimension – error {length, width, height} ... 114
A.2.24 Bounding box ground clearance ... 114
A.2.25 Included geometric structures ... 115
A.2.26 Existence probability – object level ... 115
A.2.27 Number of valid potentially moving object probability classifications ... 116
A.2.28 Potentially moving object classification probability type ... 116
A.2.29 Potentially moving object classification probability value ... 117
A.2.30 Number of valid lights ... 117
A.2.31 Light type ... 117
A.2.32 Light status ... 118
A.2.33 Number of valid persons poses ... 118
A.2.34 Person pose type ... 118
A.2.35 Person pose {yaw, pitch, roll} ... 120
A.2.36 Person pose – error {yaw, pitch, roll} ... 120
A.2.37 Object lane association ... 120
A.2.38 Angle to object edge to lane {left edge right lane, right edge left lane} ... 121
A.2.39 Angle to object edge to lane – error {left edge right lane, right edge left lane} ... 122
A.2.40 Percentage side lane {left, right} ... 122
A.2.41 Angular position {azimuth} ... 122
A.2.42 Angular velocity {azimuth} ... 122
A.2.43 Scale change – object level ... 123
A.2.44 Entity radar cross section ... 123
A.2.45 Entity lidar reflectivity ... 123

© ISO 2020 – All rights reserved

Copyright International Organization for Standardization
Provided by IHS Markit under license with ANSI
No reproduction or networking permitted without license from IHS
Order Number: W2233726
Sold to:APTIV [222021100001] - RUTH.M.MONTANO@APTIV.COM,
Not for Resale,2020-08-07 18:02:38 UTC

A.2.46 Road type ... 123
A.2.47 Number of valid road surface classifications ... 124
A.2.48 Road surface type ... 124
A.2.49 Road surface probability value ... 124
A.2.50 Number of valid road surface condition classifications ... 125
A.2.51 Road surface condition type ... 125
A.2.52 Road surface condition probability value ... 125
A.2.53 Road surface roughness ... 126
A.2.54 Number of valid road marking types ... 126
A.2.55 Road marking type ... 126
A.2.56 Road marking type – confidence ... 128
A.2.57 Arrow orientation ... 128
A.2.58 Arrow direction ... 128
A.2.59 Sign type ... 129
A.2.60 Sign type – confidence ... 130
A.2.61 Sign value ... 130
A.2.62 Sign value unit ... 130
A.2.63 Colour value – object level ... 131
A.2.64 Colour classification – confidence ... 131
A.2.65 Number of valid connections ... 131
A.2.66 Connection type ... 131
A.2.67 Connection ID ... 132
A.2.68 Number of valid polynomials ... 132
A.2.69 Polynomial coefficient {c0, c1, c2, c3} ... 133
A.2.70 Polynomial – error ... 133
A.2.71 Polynomial range x {start, end} ... 134
A.2.72 Width – polynomial ... 134
A.2.73 Width – polynomial – error ... 135
A.2.74 Width – polynomial – confidence ... 135
A.2.75 Height – polynomial ... 135
A.2.76 Height – polynomial – error ... 135
A.2.77 Height – polynomial – confidence ... 135
A.2.78 Number of valid data ranges ... 136
A.2.79 Supported data range x {start, end} ... 136
A.2.80 Polyline interpolation method ... 136
A.2.81 Number of valid polylines ... 137
A.2.82 Number of valid vertices ... 138
A.2.83 Vertex point {x, y, z} ... 138
A.2.84 Vertex point – error {x, y, z} ... 138
A.2.85 Vertex point – confidence {x, y, z} ... 138
A.2.86 Width – vertex ... 138
A.2.87 Width – vertex – error ... 139
A.2.88 Width – vertex – confidence ... 139
A.2.89 Height – vertex ... 139
A.2.90 Height – vertex – error ... 139
A.2.91 Height – vertex – confidence ... 140
A.2.92 Number of valid road boundary types ... 140
A.2.93 Road boundary type ... 140
A.2.94 Road boundary type – confidence ... 141
A.2.95 Lane boundary role ... 141
A.2.96 Lane boundary role – confidence ... 141
A.2.97 Number of valid general landmark classifications ... 142
A.2.98 General landmark classification type ... 142

© ISO 2020 – All rights reserved

Copyright International Organization for Standardization
Provided by IHS Markit under license with ANSI
No reproduction or networking permitted without license from IHS
Order Number: W2233726
Sold to:APTIV [222021100001] - RUTH.M.MONTANO@APTIV.COM,
Not for Resale,2020-08-07 18:02:38 UTC

A.2.99 General landmark classification probability value ... 143
A.2.100 General landmark classification confidence ... 143
A.2.101 Orientation – object level {vertical} ... 143
A.2.102 Orientation – object level – error {vertical} ... 143
A.2.103 Sign geometry ... 143
A.2.104 Variable message sign ... 144
A.2.105 Out of service ... 144
A.2.106 Lane relevance ... 145
A.2.107 Lane relevance – confidence ... 146
A.2.108 Number of valid traffic supplementary signs ... 146
A.2.109 Supplementary sign type ... 146
A.2.110 Supplementary sign type – confidence ... 147
A.2.111 Relative position ... 147
A.2.112 Relative position order ... 148
A.2.113 Structure light type ... 148
A.2.114 Structure light type – confidence ... 148
A.2.115 Minimum visibility distance ... 148
A.2.116 Total number of traffic light spots ... 149
A.2.117 Total number of traffic light spots – confidence ... 149
A.2.118 Number of valid traffic light spots ... 149
A.2.119 Number of valid colour classifications ... 149
A.2.120 Colour type ... 150
A.2.121 Colour probability value ... 150
A.2.122 Colour – confidence ... 150
A.2.123 Number of valid light mode classifications ... 150
A.2.124 Light mode type ... 151
A.2.125 Light mode probability value ... 151
A.2.126 Light mode – confidence ... 151
A.2.127 Light shape ... 151
A.2.128 Light shape – confidence ... 152
A.2.129 Light shape – value ... 153
A.3 Feature level entity signals ... 153
A.3.1 Feature existence probability ... 153
A.3.2 Feature ID ... 153
A.3.3 Object ID reference – feature level ... 154
A.3.4 Time stamp difference – feature level ... 154
A.3.5 Observation – feature level ... 154
A.3.6 Shape type – feature level ... 155
A.3.7 Number of valid shape classifications – feature level ... 155
A.3.8 Shape classification type – feature level ... 156
A.3.9 Shape classification probability value ... 156
A.3.10 Colour value – feature level ... 157
A.3.11 Colour probability – feature level ... 157
A.3.12 Number of valid shape points – feature level ... 157
A.3.13 Point existence probability – feature level ... 157
A.3.14 3D Position {x, y, z} ... 158
A.3.15 3D Position – error {x, y, z} ... 158
A.3.16 Number of valid shape reference points ... 158
A.3.17 Orientation normal {x, y, z} ... 158
A.3.18 Orientation normal – error {x, y, z} ... 159
A.3.19 Scaled translation rate {x, y, z} ... 159
A.3.20 Scaled translation rate – error {x, y, z} ... 159

© ISO 2020 – All rights reserved

Copyright International Organization for Standardization
Provided by IHS Markit under license with ANSI
No reproduction or networking permitted without license from IHS
Order Number: W2233726
Sold to:APTIV [222021100001] - RUTH.M.MONTANO@APTIV.COM,
Not for Resale,2020-08-07 18:02:38 UTC

A.3.21 Rotation rate {yaw, pitch, roll} ... 160
A.3.22 Rotation rate – error {yaw, pitch, roll} ... 160
A.3.23 Scale change – feature level ... 160
A.3.24 Scale change – feature level – error ... 161
A.3.25 Ultrasonic feature type ... 161
A.3.26 Ultrasonic feature type probability value ... 161
A.3.27 Number of valid points ... 161
A.3.28 2D position {x, y} ... 162
A.3.29 2D position – error {x, y} ... 162
A.3.30 Orientation – feature level {vertical} ... 163
A.3.31 Orientation – feature level – error {vertical} ... 163
A.3.32 Height – feature level ... 163
A.3.33 Height – feature level – error ... 163
A.3.34 Velocity {x, y} ... 163
A.3.35 Velocity – error {x, y} ... 164
A.3.36 Trilateration status ... 164
A.3.37 Measurement status – feature level ... 164
A.4 Detection level entity signals ... 165
A.4.1 Existence probability – detection level ... 165
A.4.2 Object ID reference – detection level ... 165
A.4.3 Feature ID reference ... 166
A.4.4 Time stamp difference – detection level ... 166
A.4.5 Position {Azimuth, Elevation, Distance} ... 167
A.4.6 Position – error {Azimuth, Elevation, Distance} ... 167
A.4.7 Radial relative velocity ... 167
A.4.8 Radial relative velocity – error ... 168
A.4.9 Radar cross section ... 168
A.4.10 Radar cross section – error ... 168
A.4.11 Signal to noise ratio – detection level ... 168
A.4.12 Signal to noise ratio – detection level – error ... 169
A.4.13 Multi target probability ... 169
A.4.14 Ambiguity ID ... 169
A.4.15 Detection ambiguity probability ... 169
A.4.16 Free space probability ... 170
A.4.17 Number of valid detection classifications ... 170
A.4.18 Detection classification type ... 170
A.4.19 Detection classification probability value ... 171
A.4.20 Height – lidar ... 171
A.4.21 Height – lidar – error ... 171
A.4.22 Reflectivity ... 172
A.4.23 Reflectivity – error ... 172
A.4.24 Shape type – detection level ... 172
A.4.25 Number of valid shape classifications – detection level ... 173
A.4.26 Shape classification type – detection level ... 173
A.4.27 Shape classification variant ... 174
A.4.28 Shape ambiguity ID ... 174
A.4.29 Colour value – detection level ... 174
A.4.30 Colour probability – detection level ... 175
A.4.31 Number of valid shape points – detection level ... 175
A.4.32 Point existence probability – detection level ... 175
A.4.33 Ellipse semi-minor axis ... 176
A.4.34 Ellipse semi-major axis ... 176
A.4.35 Ellipse axes – error {Ellipse semi-minor axis, Ellipse semi-major axis} ... 177

 © ISO 2020 – All rights reserved

Copyright International Organization for Standardization
Provided by IHS Markit under license with ANSI
No reproduction or networking permitted without license from IHS

Order Number: W2233726
Sold to:APTIV [222021100001] - RUTH.M.MONTANO@APTIV.COM,
Not for Resale,2020-08-07 18:02:38 UTC

A.4.36 Height – ultrasonic ... 177
A.4.37 Height – ultrasonic – error ... 177
A.5 Supportive sensor interface entity signals ... 178
A.5.1 Horizontal angle {begin, end} ... 178
A.5.2 Vertical angle {begin, end} ... 178
A.5.3 Resolution {horizontal, vertical} ... 179
A.5.4 Beam divergence {horizontal, vertical} ... 179
A.5.5 Range gain ... 179
A.5.6 Blockage status ... 180
A.5.7 Number of valid field of view reduction reasons ... 180
A.5.8 Field of view reduction reason type ... 181
A.5.9 Field of view reduction reason probability ... 182
A.5.10 Number of valid object detection classifications ... 182
A.5.11 Recognized object type ... 182
A.5.12 Detection range {min, max} ... 183
A.5.13 Minimum classification rate ... 183
A.5.14 Maximum false positive rate ... 183
A.5.15 Positive predictive value ... 184
A.5.16 Number of valid reference detection classifications ... 184
A.5.17 Radar cross section reference target ... 184
A.5.18 Reflectivity reference target ... 184
A.5.19 Delta E colour difference ... 185
A.5.20 Relative speed range {min, max} ... 185
A.5.21 Signal to noise ratio – supportive level ... 185
A.5.22 Sensor operation state ... 185
A.5.23 Sensor operation mode ... 186
A.5.24 Sensor defect detected ... 186
A.5.25 Sensor defect reason ... 187
A.5.26 Sensor diagnostic mode ... 188
A.5.27 Status supply voltage ... 188
A.5.28 Sensor temperature status ... 189
A.5.29 Number of valid sensor input signal statuses ... 189
A.5.30 Sensor input signal – type ... 189
A.5.31 Sensor input signal – status ... 190
A.5.32 Sensor external disturbed ... 190
A.5.33 Sensor transmit power reduced ... 191
A.5.34 Status sensor heating ... 191
A.5.35 Status sensor cleaning ... 192
A.5.36 Sensor time sync ... 192
A.5.37 Sensor time sync offset value ... 193
A.5.38 Number of valid sensor calibratable components ... 193
A.5.39 Sensor calibratable component ... 193
A.5.40 Sensor calibration status ... 194
A.5.41 Correction origin position {x, y, z} ... 194
A.5.42 Correction origin position – error {x, y, z} ... 195
A.5.43 Correction position – limit minimum {x, y, z} ... 195
A.5.44 Correction position – limit maximum {x, y, z} ... 195
A.5.45 Correction orientation {yaw, pitch, roll} ... 195
A.5.46 Correction orientation – error {yaw, pitch, roll} ... 196
A.5.47 Correction angle – limit minimum {yaw, pitch, roll} ... 196
A.5.48 Correction angle – limit maximum {yaw, pitch, roll} ... 196

Annex B (normative) Options and constraints ... 197

© ISO 2020 – All rights reserved

Copyright International Organization for Standardization
Provided by IHS Markit under license with ANSI
No reproduction or networking permitted without license from IHS

Order Number: W2233726
Sold to:APTIV [222021100001] - RUTH.M.MONTANO@APTIV.COM,
Not for Resale,2020-08-07 18:02:38 UTC

B.1 Options for interface optimization 197
B.1.1 List length optimization 197
B.1.2 Redundancy optimization 197
B.1.3 Alternative representation optimization 197
B.1.4 Implicit values 198
B.1.5 Unrolling tuple-lists 198
B.2 Requirement level conditional reasons 198
B.2.1 Sensor technology specific conditional requirements 198
B.2.2 Signal dependencies 199
B.2.3 Multiple entity lists for one interface 199
B.3 Cross interface optimization 199
B.3.1 Link between interfaces 199
B.3.2 Assignment of information to one interface 199
B.3.3 Need of logical signal group 199
B.4 Cross interface definition 200
B.4.1 Error model implementation 200

Bibliography 206

© ISO 2020 – All rights reserved

Copyright International Organization for Standardization
Provided by IHS Markit under license with ANSI
No reproduction or networking permitted without license from IHS

Order Number: W2233726
Sold to:APTIV [222021100001] - RUTH.M.MONTANO@APTIV.COM,
Not for Resale,2020-08-07 18:02:38 UTC

Foreword

ISO (the International Organization for Standardization) is a worldwide federation of national standards bodies (ISO member bodies). The work of preparing International Standards is normally carried out through ISO technical committees. Each member body interested in a subject for which a technical committee has been established has the right to be represented on that committee. International organizations, governmental and non-governmental, in liaison with ISO, also take part in the work. ISO collaborates closely with the International Electrotechnical Commission (IEC) on all matters of electrotechnical standardization.

The procedures used to develop this document and those intended for its further maintenance are described in the ISO/IEC Directives, Part 1. In particular, the different approval criteria needed for the different types of ISO documents should be noted. This document was drafted in accordance with the editorial rules of the ISO/IEC Directives, Part 2 (see www.iso.org/directives).

Attention is drawn to the possibility that some of the elements of this document may be the subject of patent rights. ISO shall not be held responsible for identifying any or all such patent rights. Details of any patent rights identified during the development of the document will be in the Introduction and/or on the ISO list of patent declarations received (see www.iso.org/patents).

Any trade name used in this document is information given for the convenience of users and does not constitute an endorsement.

For an explanation of the voluntary nature of standards, the meaning of ISO specific terms and expressions related to conformity assessment, as well as information about ISO's adherence to the World Trade Organization (WTO) principles in the Technical Barriers to Trade (TBT), see www.iso.org/iso/foreword.html.

This document was prepared by Technical Committee ISO/TC 22, *Road vehicles*, Subcommittee SC 31, *Data communication*.

Any feedback or questions on this document should be directed to the user's national standards body. A complete listing of these bodies can be found at www.iso.org/members.html.

© ISO 2020 – All rights reserved

Copyright International Organization for Standardization
Provided by IHS Markit under license with ANSI
No reproduction or networking permitted without license from IHS

Order Number: W2233726
Sold to:APTIV [222021100001] - RUTH.M.MONTANO@APTIV.COM,
Not for Resale,2020-08-07 18:02:38 UTC

Introduction

Highly automated driving (AD) functions for road vehicles require an all-over recognition of the surroundings of the vehicle and a preferably comprehensive scene understanding. For the fast and reliable recognition of real-world objects, a set of high-performance sensors is necessary to provide information for the fusion unit. Utilization of different sensor technologies like radar, lidar, camera and ultrasonic with different detection capabilities is indispensable to ensure both complementary and redundant information. The fusion unit analyses and evaluates the different sensor signals and finally generates a dynamic surround model with a good scene understanding.

While current partly automated function utilize only particular objects (e.g. vehicles, pedestrians, road markings) to generate a simple surround model, it is necessary for future highly automated driving functions to merge not only the recognized objects but also to include other sensor specific features and characteristics of these objects for the generation of a coherent model of the surrounding. To minimize the development efforts for the sensors and the fusion unit and to maximize the re-usability of development and validation efforts for the different functions a standardized logical interface layer between sensor systems and fusion unit is worthwhile and beneficial for both the sensor- and the system supplier.

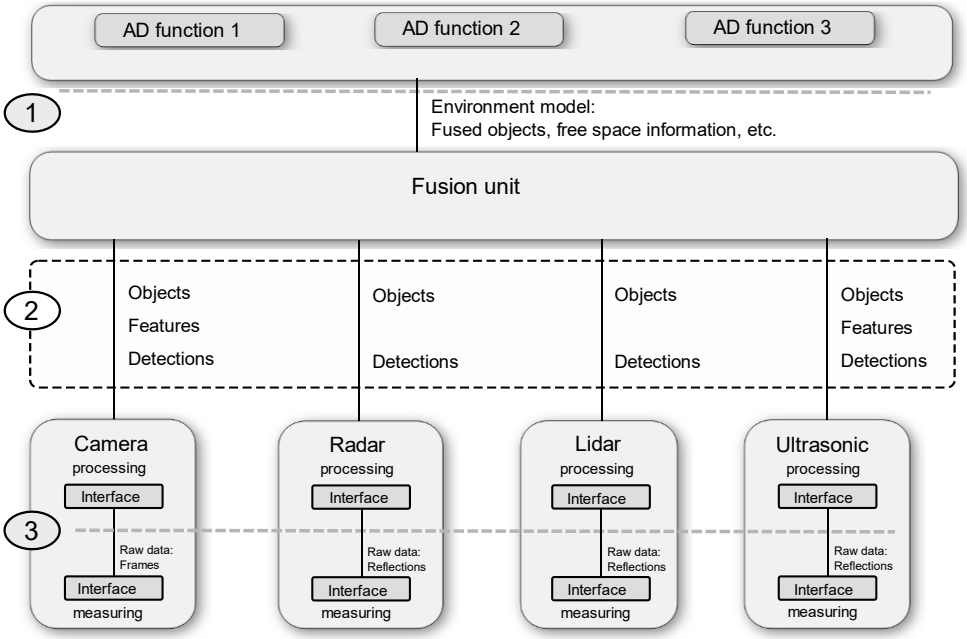

Key

1: Logical interface layer between the fusion unit and automated driving functions

2: Logical interface layer between a single sensor and the fusion unit. This logical interface layer addresses:

- Encapsulation of technical complexity
- Objects, features and detections to enable object level, feature level and detection level fusion

3: Interface layer on raw data level of a sensor

Figure 1 — Architecture: sensors – fusion unit – automatic driving functions

© ISO 2020 – All rights reserved

Copyright International Organization for Standardization
Provided by IHS Markit under license with ANSI
No reproduction or networking permitted without license from IHS

Order Number: W2233726
Sold to:APTIV [222021100001] - RUTH.M.MONTANO@APTIV.COM,
Not for Resale,2020-08-07 18:02:38 UTC

Road vehicles — Data communication between sensors and data fusion unit for automated driving functions — Logical interface

1 Scope

This document is applicable to road vehicles with automated driving functions. The document specifies the logical interface between in-vehicle surround sensors (e.g. radar, lidar, camera, ultrasonic, etc.) and the fusion unit which generates a surround model and interprets the scene around the vehicle based on the sensor data. The interface is described in a modular and semantic representation and provides information on object level (e.g. potentially moving objects, road objects, static objects, etc.) as well as information on feature- and detection level and on sensor technology specific information.

This standard does not provide electrical and mechanical interface specifications. Raw data interfaces are also excluded.

2 Normative references

The following documents, in whole or in part, are normatively referenced in this document and are indispensable for its application. For dated references, only the edition cited applies. For undated references, the latest edition of the referenced document (including any amendments) applies.

3 Terms and definitions

For the purposes of this document, the following terms and definitions apply.

ISO and IEC maintain terminological databases for use in standardization at the following addresses:

— IEC Electropedia: available at http://www.electropedia.org/

— ISO Online browsing platform: available at http://www.iso.org/obp

3.1 Architectural components

3.1.1
fusion
act of uniting two or more *sensors* (3.1.4) *interfaces* (3.1.3) and *signals* (3.3.1) to create a united model of the vehicle's surrounding

3.1.2
fusion unit
computing unit where the *fusion* (3.1.1) is performed

3.1.3
interface
logical interface between *sensor* (3.1.4) and the *fusion unit* (3.1.2)

© ISO 2020 – All rights reserved

Copyright International Organization for Standardization
Provided by IHS Markit under license with ANSI
No reproduction or networking permitted without license from IHS
Order Number: W2233726
Sold to:APTIV [222021100001] - RUTH.M.MONTANO@APTIV.COM,
Not for Resale,2020-08-07 18:02:38 UTC

Note 1 to entry: Logical means a semantic description of the interface.

Note 2 to entry: Mechanical and electrical interface is excluded.

3.1.4
sensor
on-board component which detects entities external of the vehicle with pre-processing capabilities that at least includes detection algorithms providing *interfaces* (3.1.3)

Note 1 to entry: A sensor may use one or more sensing elements.

3.2 Level of detail

3.2.1
detection
sensor technology specific entity represented in the *sensor coordinate system* (3.7.19) based on a *single measurement* (3.4.1) of a *sensor* (3.1.4)

Note 1 to entry: A small amount of history can be used for some *signals* (3.3.1), e.g. model-free filtering may be used in track-before-detect algorithms.

3.2.2
detection level
set of sensor technology specific *interfaces* (3.1.3) which provide *detections* (3.2.1)

3.2.3
feature
sensor technology specific entity represented in the *vehicle coordinate system* (3.7.17) based on a *single measurement* (3.4.1) of a *sensor* (3.1.4)

Note 1 to entry: A small amount of history can be used for some *signals* (3.3.1).

3.2.4
feature level
set of sensor technology specific *interfaces* (3.1.3) which provide *features* (3.2.3)

3.2.5
object
representation of a real-world entity with defined boundaries and characteristics in vehicle coordinate system

Note 1 to entry: Geometric description of the object is in *vehicle coordinate system* (3.7.17).

Note 2 to entry: Object *signals* (3.3.1) are basically sensor technology independent. Sensor technology specific object *signals* (3.3.1) may extend the object.

Note 3 to entry: An object could be e.g. a *potentially moving object* (3.6.1), a *static object* (3.6.6) or a *road object* (3.6.2).

3.2.6
object level
set of *interfaces* (3.1.3) which provide *objects* (3.2.5)

© ISO 2020 – All rights reserved

Copyright International Organization for Standardization
Provided by IHS Markit under license with ANSI
No reproduction or networking permitted without license from IHS

Order Number: W2233726
Sold to:APTIV [222021100001] - RUTH.M.MONTANO@APTIV.COM,
Not for Resale,2020-08-07 18:02:38 UTC

3.3 Structure

3.3.1
signal
an entity consisting of one or more values and which is part of an *interface* (3.1.3)

3.3.2
logical signal group
a grouping of *signals* (3.3.1) that have a logical relationship and a name for the grouping

3.3.3
classification
attribute based differentiation

Note 1 to entry: An attribute is defined by a list of enumerators.

3.4 Measurement

3.4.1
single measurement
measuring and processing for one *measurement cycle* (3.4.2)

3.4.2
measurement cycle
time period from the start of a data acquisition event to the start of the next data acquisition event

Note 1 to entry: One measurement cycle is a consistent view of the situation and not overlapping in time.

3.4.3
accuracy
closeness of agreement between a measured quantity value and a true quantity value of a measurand

Note 1 to entry: The concept measurement accuracy is not a quantity and is not given a numerical quantity value. A measurement is said to be more accurate when it offers a smaller measurement error.

Note 2 to entry: The term measurement accuracy should not be used for measurement trueness and the term measurement precision should not be used for measurement accuracy, which, however, is related to both these concepts.

Note 3 to entry: Measurement accuracy is sometimes understood as closeness of agreement between measured quantity values that are being attributed to the measurand.

[SOURCE: ISO/IEC Guide 99:2007, 2.13]

3.4.4
trueness
closeness of agreement between the average of an infinite number of replicate measured quantity values and a reference quantity value

Note 1 to entry: Measurement trueness is not a quantity and thus cannot be expressed numerically, but measures for closeness of agreement are given in ISO 5725.

Note 2 to entry: Measurement trueness is inversely related to systematic measurement error, but is not related to random measurement error.

© ISO 2020 – All rights reserved

Copyright International Organization for Standardization
Provided by IHS Markit under license with ANSI
No reproduction or networking permitted without license from IHS
Order Number: W2233726
Sold to:APTIV [222021100001] - RUTH.M.MONTANO@APTIV.COM,
Not for Resale,2020-08-07 18:02:38 UTC

Note 3 to entry: Measurement accuracy should not be used for measurement trueness.

[SOURCE: ISO/IEC Guide 99:2007, 2.14]

3.4.5
precision
closeness of agreement between indications or measured quantity values obtained by replicate measurements on the same or similar objects under specified conditions

Note 1 to entry: Measurement precision is usually expressed numerically by measures of imprecision, such as standard deviation, variance, or coefficient of variation under the specified conditions of measurement.

Note 2 to entry: The specified conditions can be, for example, repeatability conditions of measurement, intermediate precision conditions of measurement, or reproducibility conditions of measurement (see ISO 5725-1:1994).

Note 3 to entry: Measurement precision is used to define measurement repeatability, intermediate measurement precision, and measurement reproducibility.

Note 4 to entry: Sometimes measurement precision is erroneously used to mean measurement accuracy.

[SOURCE: ISO/IEC Guide 99:2007, 2.15]

3.4.6
error
measured quantity value minus a reference quantity value

Note 1 to entry: The concept of measurement error can be used both:

a) when there is a single reference quantity value to refer to, which occurs if a calibration is made by means of a measurement standard with a measured quantity value having a negligible measurement uncertainty or if a conventional quantity value is given, in which case the measurement error is known, and

b) if a measurand is supposed to be represented by a unique true quantity value or a set of true quantity values of negligible range, in which case the measurement error is not known.

Note 2 to entry: Measurement error should not be confused with production error or mistake.

[SOURCE: ISO/IEC Guide 99:2007, 2.16]

3.5 Requirement level

3.5.1
conditional
required under certain specified conditions

Note 1 to entry: One of three obligation statuses applied to a *requirement level* (3.5.4) of an *interface* (3.1.3) specification, indicating the conditions under which the *signal* (3.3.1) or *logical signal group* (3.3.2) is required. See also *mandatory* (3.5.2) and *optional* (3.5.3). In other cases, the *signal* (3.3.1) or *logical signal group* (3.3.2) is *optional* (3.5.3).

[SOURCE: ISO/IEC 11179-3:2013, 3.2.22, modified — Notes to entry has been adapted.]

© ISO 2020 – All rights reserved

Copyright International Organization for Standardization
Provided by IHS Markit under license with ANSI
No reproduction or networking permitted without license from IHS

Order Number: W2233726
Sold to:APTIV [222021100001] - RUTH.M.MONTANO@APTIV.COM,
Not for Resale,2020-08-07 18:02:38 UTC

3.5.2
mandatory
always required

Note 1 to entry: One of three obligation statuses applied to a *requirement level* (3.5.4) of an *interface* (3.1.3) specification, indicating the conditions under which the attribute is required. See also *conditional* (*3.5.1*) and *optional* (3.5.3).

[SOURCE: ISO/IEC 11179-3:2013, 3.2.71, modified — Notes to entry has been adapted.]

3.5.3
optional
permitted but not required

Note 1 to entry: One of three obligation statuses applied to a *requirement level* (3.5.4) of an *interface* (3.1.3) specification, indicating the conditions under which the attribute is required. See also *conditional* (*3.5.1*) and *mandatory* (3.5.2).

[SOURCE: ISO/IEC 11179-3:2013, 3.2.89, modified — Notes to entry has been adapted.]

3.5.4
requirement level
definition of the obligation status of an *interface*'s (3.1.3) *logical signal group* (3.3.2), *signal* (3.3.1) resp. *signal*'s (3.3.1) identifiers or *signal*'s (3.3.1) enumerator

Note 1 to entry: Each requirement level entry has one of three possible obligation statuses applied: *conditional* (*3.5.1*), *mandatory* (3.5.2) or *optional* (3.5.3).

3.6 Interfaces

3.6.1
potentially moving object
real-world entity which potentially can move and is relevant for driving situations

Note 1 to entry: Potentially moving object is part of *object level* (3.2.6) *interfaces* (3.1.3).

EXAMPLE vehicle, bicycle, pedestrian, obstacle

3.6.2
road object
marking or structure of a road which is relevant for driving situations

Note 1 to entry: Road object is part of *object level* (3.2.6) *interfaces* (3.1.3).

EXAMPLE *road marking* (3.6.3), *road boundary* (3.6.4) and *road surface* (3.6.5)

3.6.3
road marking
line, symbol or other mark on a *road surface* (3.6.5) or structure intended to limit, regulate, warn, guide or inform road users

Note 1 to entry: Other marks could be text, numbers, arrows or combinations.

EXAMPLE Botts' dots, guard rail

© ISO 2020 – All rights reserved

Copyright International Organization for Standardization
Provided by IHS Markit under license with ANSI
No reproduction or networking permitted without license from IHS
Order Number: W2233726
Sold to:APTIV [222021100001] - RUTH.M.MONTANO@APTIV.COM,
Not for Resale,2020-08-07 18:02:38 UTC

[SOURCE: ISO 6707-1:2017, 3.3.5.81, modified — adapted and additional note to entry and example.]

3.6.4
road boundary
structure that limits the road

EXAMPLE curb stone, guard rail, end of road surface

3.6.5
road surface
surface supporting the tyre and providing friction necessary to generate shear forces in the *road plane* (3.7.7)

Note 1 to entry: The surface may be flat, curved, undulated or of other shape.

[SOURCE: ISO 8855:2011, 2.6]

3.6.6
static object
real-world stationary entity which can be used for information and/or localisation

Note 1 to entry: A static object is part of *object level* (3.2.6) *interfaces* (3.1.3).

EXAMPLE *general landmark* (3.6.7), *traffic sign* (3.6.8), *traffic light* (3.6.11)

3.6.7
general landmark
real-world stationary entity which can be used for localisation

Note 1 to entry: A stationary *traffic sign* (3.6.8) or *traffic light* (3.6.11) is also regarded as a general landmark.

EXAMPLE building, tunnel, bridge, sign gantry structure, tree

3.6.8
traffic sign
traffic relevant, authorised sign that limits, regulates, warns, guides or informs road users

Note 1 to entry: One traffic sign usually consists of one main traffic sign and none, one or several supplementary signs.

EXAMPLE speed limit which is restricted for trucks

3.6.9
main sign
traffic sign (3.6.8) which gives a general message, obtained by a combination of colour and geometric shape and which, by the addition of a graphical symbol or text, gives a particular message for road user

[SOURCE: ISO 3864-1:2011, 3.12, modified — Term has been renamed (see safety sign).]

3.6.10
supplementary sign
traffic sign (3.6.8) that is supportive of a *main sign* (3.6.9) and the main purpose of which is to provide additional clarification

[SOURCE: ISO 3864-1:2011, 3.14, modified.]

© ISO 2020 – All rights reserved

Copyright International Organization for Standardization
Provided by IHS Markit under license with ANSI
No reproduction or networking permitted without license from IHS
Order Number: W2233726
Sold to:APTIV [222021100001] - RUTH.M.MONTANO@APTIV.COM,
Not for Resale,2020-08-07 18:02:38 UTC

3.6.11
traffic light
traffic relevant, official lights

Note 1 to entry: One traffic light consists of one or several light spots with different light colours and shapes.

EXAMPLE pedestrian traffic light

3.7 Axis and coordinate systems

3.7.1
reference frame
geometric environment in which all points remain fixed with respect to each other at all times

[SOURCE: ISO 8855:2011, 2.1]

3.7.2
inertial reference frame
Newtonian reference frame
reference frame (3.7.1) that is assumed to have zero linear and angular acceleration and zero angular velocity

Note 1 to entry: In Newtonian physics, the Earth is assumed to be an inertial reference frame.

[SOURCE: ISO 8855:2011, 2.2]

3.7.3
axis system
set of three orthogonal directions associated with X, Y and Z axes

Note 1 to entry: A right-handed axis system is assumed throughout this International Standard, where: $\vec{Z} = \vec{X} \times \vec{Y}$.

[SOURCE: ISO 8855:2011, 2.3]

3.7.4
coordinate system
numbering convention used to assign a unique ordered trio of values to each point in a *reference frame* (3.7.1), and which consists of an *axis system* (3.7.3) plus an origin point

[SOURCE: ISO 8855:2011, 2.4, modified.]

3.7.5
cartesian coordinate system
set of numerical coordinates (x, y, z), which are the signed distances to the YZ-, ZX- and XY-planes

3.7.6
spherical coordinate system
set of two angles and a distance vector associated with Azimuth, Elevation and Distance

Note 1 to entry: The Azimuth angle is the angle in XY-plane of the *axis system* (3.7.3) counted from the X-axis. The Elevation angle is the angle from the Azimuth direction in the XY-plane of the *axis system* (3.7.3) towards the direction of the Distance vector, i.e. XY-plane has Elevation angle = 0 rad.

© ISO 2020 – All rights reserved

Copyright International Organization for Standardization
Provided by IHS Markit under license with ANSI
No reproduction or networking permitted without license from IHS
Order Number: W2233726
Sold to:APTIV [222021100001] - RUTH.M.MONTANO@APTIV.COM,
Not for Resale,2020-08-07 18:02:38 UTC

Note 2 to entry: The angles of the spherical coordinate system have increasing values in counter-clockwise direction.

3.7.7
road plane
plane representing the *road surface* (3.6.5) within the front tyre contact patches (see ISO 8855:2011, 4.1.5) and the *vehicle road level reference point* (3.7.14)

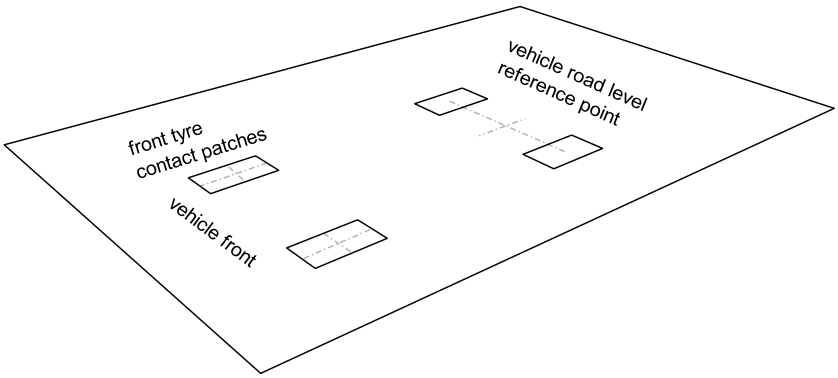

Figure 2 — Road plane

[SOURCE: ISO 8855:2011, 2.7, modified — Definition has been adapted and figure added.]

3.7.8
road level
point lying on the *road plane* (3.7.7)

3.7.9
vehicle unsprung mass
mass that is not carried by the suspension, but is supported directly by the tyres

[SOURCE: ISO 8855:2011, 4.11, modified — Term has been renamed (see unsprung mass).]

3.7.10
vehicle sprung mass
mass that is supported by the suspension, i.e. the total vehicle mass less the *vehicle unsprung mass* (3.7.9)

[SOURCE: ISO 8855:2011, 4.12, modified — Term has been renamed (see sprung mass), Note 1 to entry has been removed.]

3.7.11
vehicle rear axle reference point
point fixed in the *vehicle sprung mass* (3.7.10) and located at the centre of the rear axle

3.7.12
vehicle sprung mass axis system
axis system (3.7.3) fixed in the *reference frame* (3.7.1) of the *vehicle sprung mass* (3.7.10), so that the X-axis is substantially horizontal and forwards (with the vehicle at rest), and is parallel to the vehicle's longitudinal plane of symmetry, and the Y-axis is perpendicular to the vehicle's longitudinal plane of symmetry and points to the left with the Z-axis pointing upward

© ISO 2020 – All rights reserved

Copyright International Organization for Standardization
Provided by IHS Markit under license with ANSI
No reproduction or networking permitted without license from IHS
Order Number: W2233726
Sold to:APTIV [222021100001] - RUTH.M.MONTANO@APTIV.COM,
Not for Resale,2020-08-07 18:02:38 UTC

3.7.13
vehicle rear axle coordinate system
coordinate system (3.7.4) based on the *vehicle sprung mass axis system* (3.7.12) with the origin located at the *vehicle rear axle reference point* (3.7.11)

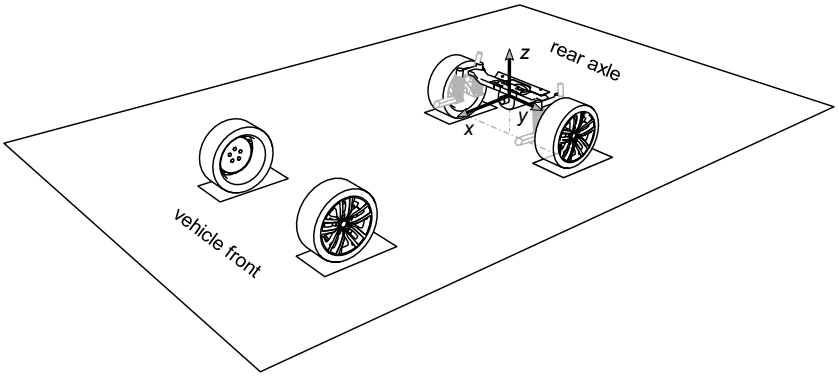

Figure 3 — Vehicle rear axle coordinate system

Note 1 to entry: The vehicle rear axle coordinate system is a cartesian *vehicle coordinate system* (3.7.17).

3.7.14
vehicle road level reference point
point at *road level* (3.7.8) located in the middle of the rear tyre contact patches (see ISO 8855:2011, 4.1.5)

3.7.15
vehicle road level axis system
axis system (3.7.3) fixed in the *reference frame* (3.7.1), so that the X-axis is forward in driving direction, and is parallel to the vehicle's longitudinal plane of symmetry, and the Y-axis is perpendicular to the vehicle's longitudinal plane of symmetry and points to the left with the Z-axis pointing upward

3.7.16
vehicle road level coordinate system
coordinate system (3.7.4) based on the *vehicle road level axis system* (3.7.15) with the origin located at the *vehicle road level reference point* (3.7.14) at the vehicle *road level* (3.7.8)

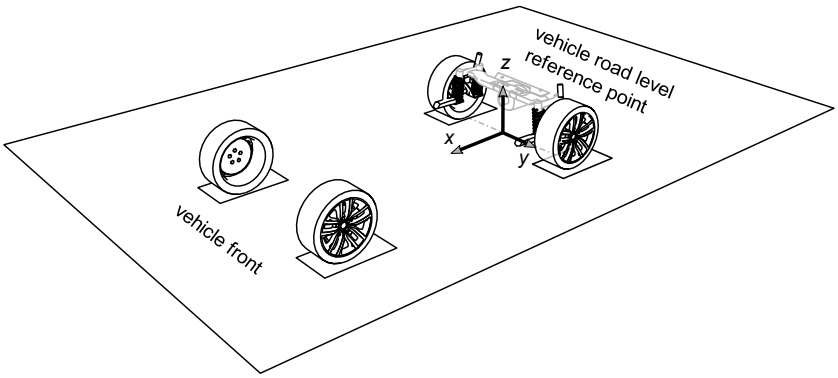

Figure 4 — Vehicle road level coordinate system

Note 1 to entry: The vehicle road level coordinate system is a cartesian *vehicle coordinate system* (3.7.17).

© ISO 2020 – All rights reserved

Copyright International Organization for Standardization
Provided by IHS Markit under license with ANSI
No reproduction or networking permitted without license from IHS
Order Number: W2233726
Sold to:APTIV [222021100001] - RUTH.M.MONTANO@APTIV.COM,
Not for Resale,2020-08-07 18:02:38 UTC

3.7.17
vehicle coordinate system
cartesian *coordinate system* (3.7.4) which is either the *vehicle rear axle coordinate system* (3.7.13) or the *vehicle road level coordinate system* (3.7.16)

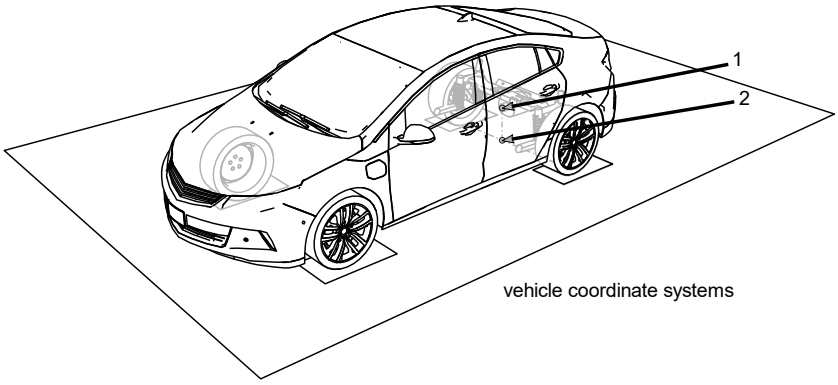

Key

1: *vehicle rear axle reference point* (3.7.11)

2: *vehicle road level reference point* (3.7.14)

Figure 5 —Vehicle coordinate system

3.7.18
sensor axis system
axis system (3.7.3) fixed in the *reference frame* (3.7.1) of the *sensor* (3.1.4)

Note 1 to entry: The X-axis is in viewing direction of the *sensor* (3.1.4) and the Z-axis pointing upward.

3.7.19
sensor coordinate system
spherical *coordinate system* (3.7.4) based on the *sensor axis system* (3.7.18) at a defined point of the *sensor* (3.1.4)

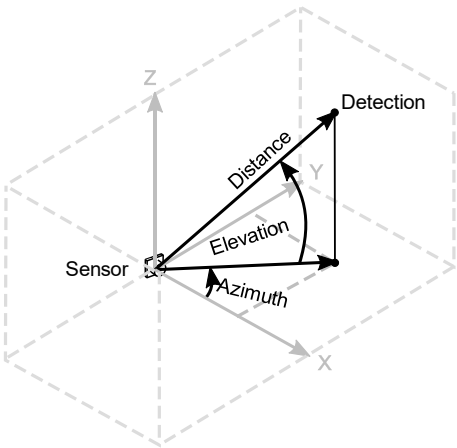

Figure 6 — Sensor coordinate system

Note 1 to entry: The origin of the sensor coordinate system has to be selected in a way that *detections* (3.2.1) could easily be specified in a spherical *coordinate system* (3.7.4). E.g. the origin of a camera sensor is the virtual projection centre of the camera's optics.

© ISO 2020 – All rights reserved

Copyright International Organization for Standardization
Provided by IHS Markit under license with ANSI
No reproduction or networking permitted without license from IHS

Order Number: W2233726
Sold to:APTIV [222021100001] - RUTH.M.MONTANO@APTIV.COM,
Not for Resale,2020-08-07 18:02:38 UTC

4 Symbols and abbreviated terms

For the purposes of this document, the following abbreviated terms apply.

AD	automated driving
C	conditional
CDI	camera detection interface
CFI	camera feature interface
DLI	detection level interface
ECU	electronic control unit
FLI	feature level interface
FOV	field of view
FWHM	full width at half maximum
ID	identifier
IQR	interquartile range
LDI	lidar detection interface
LSG	logical signal group
M	mandatory
O	optional
OLI	object level interface
PMOI	potentially moving object interface
RCS	radar cross section
RDI	radar detection interface
RL	requirement level
RDOI	road object interface
SHII	sensor health information interface
SNR	signal to noise ratio
SOI	static object interface
SSI	supportive sensor interface

© ISO 2020 – All rights reserved

Copyright International Organization for Standardization
Provided by IHS Markit under license with ANSI
No reproduction or networking permitted without license from IHS

Order Number: W2233726
Sold to:APTIV [222021100001] - RUTH.M.MONTANO@APTIV.COM,
Not for Resale,2020-08-07 18:02:38 UTC

SPI sensor performance interface

UDI ultrasonic detection interface

UFI ultrasonic feature interface

VP vanishing point

5 Structure of the interface description

— Description of each interface by LSGs, signal names and requirement levels

— The requirement level attribute conditional will be an element used in this document

— Logical interlink resp. dependencies between signals of an interface will be defined in the main part as profiles of the interface

— Detailed description of each signal in the normative Annex A

— Options and conditional requirements in the normative Annex B

5.1 Signal

Table 1 provides an overview of a signal used by an Interface (5.2). All signals are defined in Annex A.

Table 1 — Signal: <...>

Name	Name of the signal and optional list of signal identifiers: e.g. {x, y, z}. EXAMPLE Position {x, y, z}		
Description	Definition of the signal. EXAMPLE Position of the reference point in the cartesian vehicle coordinate system (see Vehicle coordinate system type (A.1.20)).		
Value type	Definition of the value type and optional the number of values resp. identifiers i.e. number of dimensions (default: 1D). EXAMPLE 3D vector real value	**Unit**	Unit definition of the signal value. In this document, unit defines no application or network representation of the signal value (e.g. a scaling factor, a fix point representation, a linear or non-linear increasing values). EXAMPLE (m, m, m)

Each signal with value type enumeration defines in general an exemplary list of enumerators in an additional table. Next to the signal definition in Annex A the enumeration list is described. During the system design phase, the exemplary enumeration list shall be defined. At least one enumerator shall, additional new or removed exemplary enumerators may or modified enumerator definitions could be

© ISO 2020 – All rights reserved

Copyright International Organization for Standardization
Provided by IHS Markit under license with ANSI
No reproduction or networking permitted without license from IHS

Order Number: W2233726
Sold to:APTIV [222021100001] - RUTH.M.MONTANO@APTIV.COM,
Not for Resale,2020-08-07 18:02:38 UTC

used. The enumerator "<Enumeration>_Unknown" is always one exemplary enumerator and therefore it is not added to the exemplary enumeration list.

Table 2 — Enumeration: <Signal> – Example enumerators

Name	Description	RL enumerator
Name of the enumerator.	Definition of the enumerator.	Requirement level of the enumerator (Mandatory / Conditional / Optional).
EXAMPLE:		
MovementStatus_Moving	Object moves currently.	"exemplary"[1]
MovementStatus_StoppedMoving	Object movement was detected in tracking history.	"exemplary"
MovementStatus_Stationary	Until now no object movement was detected in tracking history.	"exemplary"

5.2 Interface

Table 3 provides an overview of one logical interface.

Table 3 — Interface: <...>

LSG	RL LSG M/C/O	Signal	RL signal M/C/O	Option
Name for logical signal group (LSG) – for a logical group of multiple signals.	Requirement level for LSG: mandatory, conditional or optional.	Name of the signal, optional: {list of signal identifiers} with a reference to (see Annex A).	Requirement level for signal: mandatory, conditional or optional - specified for the signal and all signal identifiers or for each signal identifier individually as e.g. {M, M, O}.	Additional options for the signal (e.g. optimization).
EXAMPLE:				
Header information	M	Version ID {major, minor, patch} (A.1.1)	M	
		Sensor ID (A.1.2)	M	

[1] Exemplary enumerators are marked as RL "exemplary".

© ISO 2020 – All rights reserved

Copyright International Organization for Standardization
Provided by IHS Markit under license with ANSI
No reproduction or networking permitted without license from IHS
Order Number: W2233726
Sold to:APTIV [222021100001] - RUTH.M.MONTANO@APTIV.COM,
Not for Resale,2020-08-07 18:02:38 UTC

		Interface ID (A.1.3)	O	
		Time stamp – predicted (A.1.4.1)	M	
		Cycle counter (A.1.5.1)	O	Redundancy (B.1.2 – Signal: Time stamp – predicted (A.1.4.1))
		Interface cycle time (A.1.6)	O	
		Interface cycle time – variation (A.1.7)	O	
		Data qualifier (A.1.8)	M	
Objects	M	Recognized potentially moving objects – capability (A.1.9.1)	O	
		Recognized potentially moving objects – status (A.1.10.1)	O	
		Number of valid potentially moving objects (A.1.11.1)	M	Optimize (B.1.1 – List length optimization)
		Size type: dynamic/fixed Size #: Number of valid potentially moving objects (A.1.11.1)		
Object status	M	Object ID (A.2.1)	M	Alternative (B.3.2)
		Object grouping ID (A.2.2)	O	
		Age (A.2.3)	M	
		Observation – object level (A.2.4)	O	Redundancy (B.1.2 – Signal: Object ID (A.2.1), Cycle counter (A.1.5.1))
		Track quality (A.2.5)	O	
		Measurement status – object level (A.2.6)	M	
…	…	…	…	…

Areas in the table marked in grey indicate that the enclosed signals are part of a list of entities. The valid number of entities is defined at the beginning of the grey area (i.e. grey area header). If an interface provides multiple entity types (e.g. RDOI provides road markings and road boundaries), the interface may require not all entity types at once (see Multiple entity lists for one interface (B.2.3)).

The signal requirement level for e.g. signal Version ID {major, minor, patch} (A.1.1) is “M” i.e. mandatory, which corresponds to “{M, M, M}” for the signal identifiers, i.e. signal identifier: “Version ID major” is mandatory, “Version ID minor” is mandatory and “Version ID patch” is mandatory.

An LSG shall have at least one signal that is mandatory. Signals with RL mandatory and static or fixed values, which are defined during the system design phase and/or are implicit known by the sensor and the fusion unit may be optimized. In this case the applicability of optimization method B.1.4 is allowed which means that the mandatory signals will not be explicit transferred by the interface message.

© ISO 2020 – All rights reserved

Copyright International Organization for Standardization
Provided by IHS Markit under license with ANSI
No reproduction or networking permitted without license from IHS
Order Number: W2233726
Sold to:APTIV [222021100001] - RUTH.M.MONTANO@APTIV.COM,
Not for Resale,2020-08-07 18:02:38 UTC

A conditional LSG requirement level shall define the conditions. Under all other conditions, the LSG is optional (see definition conditional (3.5.1)).

If a signal of an optional LSG is implemented, the LSG becomes mandatory for this implementation of the interface and all signals of the LSG shall be considered as defined on the signal requirement level of the LSG. The signals itself shall be implemented according to this document to claim compliance with this standard.

5.3 Logical signal group

Table 4 provides an overview and inheritance information of the logical signal group (LSG).

Table 4 — Logical signal group: <...>

Signal	RL signal	Option
Name of the signal, optional: {list of signal identifiers} with a reference to Annex A.	Signal is mandatory, conditional or optional	Additional options for the signal (e.g. optimization)
EXAMPLE:		
Version ID {major, minor, patch} (A.1.1)	Mandatory	
Sensor ID (A.1.2)	Mandatory	
Interface ID (A.1.3)	Optional	
Time stamp (A.1.4)	Mandatory	
<...> counter (A.1.5)	Optional	Redundancy (B.1.2 – Signal: Time stamp – predicted (A.1.4.1))
Interface cycle time (A.1.6)	Optional	
Interface cycle time – variation (A.1.7)	Optional	
Data qualifier (A.1.8)	Mandatory	
Interface specific extensions[2]		
Recognized <...> – capability (A.1.9)	Optional	
Recognized <...> – status (A.1.10)	Optional	
Number of valid <...> (A.1.11)	Mandatory	Optimize (B.1.1 – List length optimization)

Inherited signal, signal requirement level and signal option of an LSG are marked in grey.

5.4 Profile: <...>

If multiple signals of an interface have an interface-specific semantic interdependency, this interdependency is described in a profile subclause and additional complex conditions are defined. Each

[2] See general extensions on interface level definition and individual extensions on each interface definition.

© ISO 2020 – All rights reserved

Copyright International Organization for Standardization
Provided by IHS Markit under license with ANSI
No reproduction or networking permitted without license from IHS
Order Number: W2233726
Sold to:APTIV [222021100001] - RUTH.M.MONTANO@APTIV.COM,
Not for Resale,2020-08-07 18:02:38 UTC

signal which is contained in the profile has an annotation of the profile in the signal's option-column definition of the interface (see sub clause 5.2) and logical signal group (see sub clause 5.3).

EXAMPLE If the radar sensor technology has one or more technology depending ambiguities, signal Ambiguity ID (A.4.14) and Detection ambiguity probability (A.4.15) are mandatory. Depending on the ambiguity reason either Radial velocity ambiguity domain {begin, end} (A.1.15), Range ambiguity domain {begin, end} (A.1.16), Angle azimuth ambiguity domain {begin, end} (A.1.17), Angle elevation ambiguity domain {begin, end} (A.1.18) or multiple ambiguity reasons the corresponding signals are mandatory.

6 Logical interface from a sensor to a fusion unit

The aim of this document is to support different levels of fusion. Therefore, the document provides three logical interface levels (detection-, feature- and object level). Supportive sensor interfaces complement the three logical interface levels. Detections, features, objects and supportive sensor information are the basis for a fusion unit. A tracking algorithm within the sensor solely using its own information results in objects with limited quality. The fusion unit can improve these and is able to merge the information on different levels, using object level fusion as well as feature-/detection level fusion. In order to perform object level fusion from two or more different sensors, sufficient evidence in the form of correlated detections belonging to a particular object must be provided by each sensor. An advantage of feature level fusion is the possible creation of an object in the common fusion unit out of detections, features or objects coming from various sensors, which alone would not have resulted in an object detection within the sensor itself. Detection level fusion may use machine learning algorithms to handle complexity. Future vehicles will integrate many sensors using different sensor technologies. Different technologies will complement each other to achieve a robust and reliable fusion.

Supportive sensor interfaces are provided so that the fusion is able to process the reliability of the used measurement method or data. These interfaces are sensor technology independent, i.e. there are uniform interfaces for each sensor technologies. These supportive sensor interfaces are also used for the implementation of safety concepts.

The following figure shows the interfaces that are in the scope of this document.

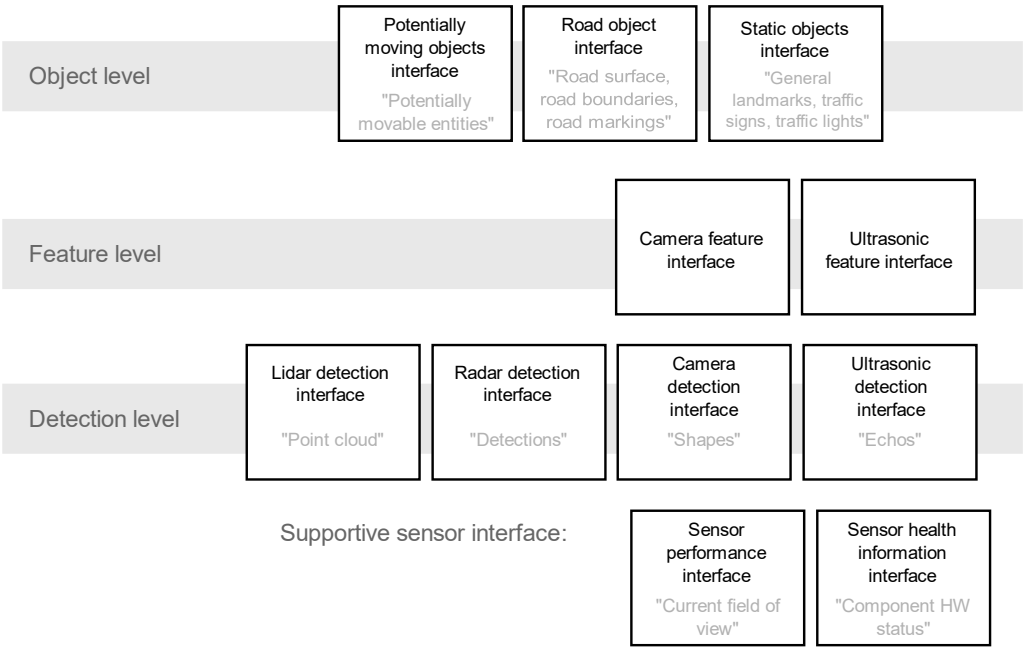

Figure 7 — Interfaces in scope of this document

© ISO 2020 – All rights reserved

Copyright International Organization for Standardization
Provided by IHS Markit under license with ANSI
No reproduction or networking permitted without license from IHS
Order Number: W2233726
Sold to:APTIV [222021100001] - RUTH.M.MONTANO@APTIV.COM,
Not for Resale,2020-08-07 18:02:38 UTC

- Objects:
  - Potentially moving object interface (7.2): with specific attributes for e.g. vehicles, pedestrians, etc.
  - Road object interface (7.3): road surface, road markings, road boundaries
  - Static object interface (7.4): general landmarks, traffic signs, traffic lights
- Sensor specific features:
  - Camera feature interface (8.2)
  - Ultrasonic feature interface (8.3)
- Sensor specific detections:
  - Radar detection interface (9.2)
  - Lidar detection interface (9.3)
  - Camera detection interface (9.4)
  - Ultrasonic detection interface (9.5)
- Supportive sensor information:
  - Sensor performance interface (10.2): with specific attributes for sensor current field of view, object detection and reference target classifications, etc.
  - Sensor health information interface (10.3): with specific attributes for generic sensor statuses, calibration information, etc.

A sensor could provide several logical interfaces. It could provide none, one or several interfaces on object level. Additionally, a sensor could provide a sensor specific interface on feature resp. detection level. Each sensor shall provide at least one interface either on object, feature or detection level to fulfil the standard. Supportive sensor interfaces could be provided optionally. The fusion unit does not have to use each provided interface. The provided interfaces could be used by other applications (e.g. AD functions), not only by the fusion unit alone.

© ISO 2020 – All rights reserved

Copyright International Organization for Standardization
Provided by IHS Markit under license with ANSI
No reproduction or networking permitted without license from IHS

Order Number: W2233726
Sold to:APTIV [222021100001] - RUTH.M.MONTANO@APTIV.COM,
Not for Resale,2020-08-07 18:02:38 UTC

6.1 Generic interface header

Table 5 defines the structure of the Generic interface header (6.1). This header is used by each interface and is adapted or extended accordingly. However, the basic LSGs remain the same for all interface headers.

Table 5 — Logical signal group: Generic interface header

Signal	RL signal	Option
Version ID {major, minor, patch} (A.1.1)	Mandatory	Profile (6.3 – Uniqueness)
Sensor ID (A.1.2)	Mandatory	Profile (6.3 – Uniqueness)
Interface ID (A.1.3)	Optional	Profile (6.3 – Uniqueness)
Time stamp (A.1.4)	Mandatory	
<…> counter (A.1.5)	Optional	Redundancy (B.1.2 – Signal: Time stamp (A.1.4))
Interface cycle time (A.1.6)	Optional	
Interface cycle time – variation (A.1.7)	Optional	
Data qualifier (A.1.8)	Mandatory	
Interface specific extensions		
Recognized <…> – capability (A.1.9)	Optional	
Recognized <…> – status (A.1.10)	Optional	
Number of valid <…> (A.1.11)	Mandatory	Optimize (B.1.1 – List length optimization)

6.2 Generic interface entity

Each logical interface provides at least a list of interface specific entities (SHII is an exception). The number of valid entities of each interface entity list is defined by the signal Number of valid <…> (A.1.11) (see Table 5). The signals Recognized <…> – capability (A.1.9) and Recognized <…> – status (A.1.10) determines the minimal performance of the sensor for the entity list e.g. at full load.

6.3 Profile: Uniqueness

The concatenation of the Version ID {major, minor, patch} (A.1.1) value, Sensor ID (A.1.2) value and Interface ID (A.1.3) value of an interface is a unique identifier for the interpretation of the interface message implementation.

7 Object level

The object level interfaces (OLI) provide recognized real-world entities and recognition is based on historical data. Recognized objects are tracked and filtered over time. Model-based algorithms classify these objects and rate them with an existence probability value. The sensor refers its recognized objects to one of two pre-defined vehicle coordinate systems. The properties, and therefore the signals of the recognized objects are generally independent of the sensor technology. Additional properties of the recognized objects can depend on the used sensor technology and complement the object description. These technology dependent signals are grouped in LSGs for each technology.

© ISO 2020 – All rights reserved

Copyright International Organization for Standardization
Provided by IHS Markit under license with ANSI
No reproduction or networking permitted without license from IHS

Order Number: W2233726
Sold to:APTIV [222021100001] - RUTH.M.MONTANO@APTIV.COM,
Not for Resale,2020-08-07 18:02:38 UTC

To link recognized objects to other interface level entities of the same sensor, each recognized object has a unique Object ID (A.2.1) value that does not change over time. The Object ID (A.2.1) value can only be reused after the object has not been recognized for a defined amount of time and the sensor is therefore certain that the object is no longer visible. I.e. a reidentification of a previous recognized object with the same Object ID (A.2.1) value, after it has not been visible to the sensor for a long time, is not guaranteed.

To link recognized objects on object level interfaces of the same sensor, the set of linked objects have the same consistent unique Object grouping ID (A.2.2) value. One dedicated value may indicate that the object is not linked to an other object.

The object recognition algorithm is based on multiple individual measurements and is updated over time. For this reason, the entire object properties are not assigned to the time of one single measurement, but to an estimated point in time at which the properties of the interface's objects fit together consistently. The object existence probability relates to this consistent set of estimated signals of the object at this estimated point in time.

On object level the following interfaces are available:

— Potentially moving object interface (7.2)

— Road object interface (7.3)

— Static object interface (7.4)

7.1 Generic object level interface

Table 6 defines the structure of a generic OLI.

Table 6 — Generic object level interface

Structure	Multiplicity	Option
Generic object level header (7.1.1)	1	
Individual object level entity list	*Multiple*	*Size type: dynamic/fixed*

Each OLI's individual object level entity list can also be a set of different, specific object type lists (e.g. for Road object interface (7.3) there are two entity lists for the object types: road marking and road boundary).

7.1.1 Generic object level header

Table 7 defines the LSG Generic object level header (7.1.1) and the changes due to the customization in comparison to the LSG Generic interface header (6.1).

© ISO 2020 – All rights reserved

Copyright International Organization for Standardization
Provided by IHS Markit under license with ANSI
No reproduction or networking permitted without license from IHS

Order Number: W2233726
Sold to:APTIV [222021100001] - RUTH.M.MONTANO@APTIV.COM,
Not for Resale,2020-08-07 18:02:38 UTC

Table 7 — Logical signal group: Generic object level header

Signal	RL signal	Option
Version ID {major, minor, patch} (A.1.1)	Mandatory	
Sensor ID (A.1.2)	Mandatory	
Interface ID (A.1.3)	Optional	
Time stamp – predicted (A.1.4.1)	Mandatory	
Cycle counter (A.1.5.1)	Optional	Redundancy (B.1.2 – Signal: Time stamp – predicted (A.1.4.1))
Interface cycle time (A.1.6)	Optional	
Interface cycle time – variation (A.1.7)	Optional	
Data qualifier (A.1.8)	Mandatory	
Object level interface specific extensions		
Recognized <…> – capability (A.1.9)	Optional	
Recognized <…> – status (A.1.10)	Optional	
Number of valid <…> (A.1.11)	Mandatory	Optimize (B.1.1 – List length optimization)

7.1.2 Generic object level entity

Table 8 defines the generic LSG generic object level entity status for each OLI object type.

Table 8 — Logical signal group: Generic object level entity – Status

Signal	RL signal	Option
Object ID (A.2.1)	Mandatory	Alternative (B.3.2)
Object grouping ID (A.2.2)	Optional	
Age (A.2.3)	Mandatory	
Observation – object level (A.2.4)	Optional	Redundancy (B.1.2 – Signal: Object ID (A.2.1), Cycle counter (A.1.5.1))
Track quality (A.2.5)	Optional	
Measurement status – object level (A.2.6)	Mandatory	

This LSG is used for each object. Geometric information of the object references the vehicle coordinate system (see Vehicle coordinate system type (A.1.20)). Detections and features of the sensor reference objects of the OLIs. Potentially connected objects shall be linked together by the sensor and the sensor shall use the same Object grouping ID (A.2.2) value for all objects of this connected object group.

© ISO 2020 – All rights reserved

Copyright International Organization for Standardization
Provided by IHS Markit under license with ANSI
No reproduction or networking permitted without license from IHS

Order Number: W2233726
Sold to:APTIV [222021100001] - RUTH.M.MONTANO@APTIV.COM,
Not for Resale,2020-08-07 18:02:38 UTC

7.2 Potentially moving object interface

At object level, the potentially moving object interface (PMOI) contains the list of objects that could potentially move and are relevant for driving situations. This includes all objects that currently move, have moved and that are not definitely static three-dimensional structures. Table 9 provides the logical interface of the potentially moving object interface. One object entity has a set of signals for different potentially moving object types (e.g. pedestrian, vehicle, etc.).

Table 9 — Potentially moving object interface

LSG	RL LSG M/C/O	Signal	RL signal M/C/O	Option
Header information	M	Version ID {major, minor, patch} (A.1.1)	M	
		Sensor ID (A.1.2)	M	
		Interface ID (A.1.3)	O	
		Time stamp – predicted (A.1.4.1)	M	
		Cycle counter (A.1.5.1)	O	Redundancy (B.1.2 – Signal: Time stamp – predicted (A.1.4.1))
		Interface cycle time (A.1.6)	O	
		Interface cycle time – variation (A.1.7)	O	
		Data qualifier (A.1.8)	M	
		Tracking motion model (A.1.12)	O	
		Motion type (A.1.13)	C (B.2.2 – Signal: see footnote[3])	
Potentially moving objects	M	Recognized potentially moving objects – capability (A.1.9.1)	O	
		Recognized potentially moving objects – status (A.1.10.1)	O	
		Number of valid potentially moving objects (A.1.11.1)	M	Optimize (B.1.1 – List length optimization)
		Size type: dynamic/fixed Size #: Number of valid potentially moving objects (A.1.11.1)		
	M	Object ID (A.2.1)	M	Alternative (B.3.2)

[3] Velocity {x, y, z} (A.2.12), Velocity – error {x, y, z} (A.2.13), Acceleration {x, y, z} (A.2.14), Acceleration – error {x, y, z} (A.2.15), Orientation rate kinematic point {yaw} (A.2.18) or Orientation rate kinematic point – error {yaw} (A.2.19)

© ISO 2020 – All rights reserved

Copyright International Organization for Standardization
Provided by IHS Markit under license with ANSI
No reproduction or networking permitted without license from IHS
Order Number: W2233726
Sold to:APTIV [222021100001] - RUTH.M.MONTANO@APTIV.COM,
Not for Resale,2020-08-07 18:02:38 UTC

Potentially moving object status		Object grouping ID (A.2.2)	O	
		Age (A.2.3)	M	
		Observation – object level (A.2.4)	O	Redundancy (B.1.2 – Signal: Object ID (A.2.1), Cycle counter (A.1.5.1))
		Track quality (A.2.5)	O	
		Measurement status – object level (A.2.6)	M	
Potentially moving object dynamics	M	Reference point (A.2.7)	O	
		Position {x, y, z} (A.2.8)	{M, M, O}	
		Position – error {x, y, z} (A.2.9)	{M, M, O}	Implementation (B.4.1 – Error model)
		Orientation {yaw, pitch, roll} (A.2.10)	O	
		Orientation – error {yaw, pitch, roll} (A.2.11)	O	Implementation (B.4.1 – Error model)
		Velocity {x, y, z} (A.2.12)	{C, C, C (B.2.2 – Signal: Position {z} (A.2.8))} (B.2.1 – Relevant: except ultrasonic)	
		Velocity – error {x, y, z} (A.2.13)	O	Implementation (B.4.1 – Error model)
		Acceleration {x, y, z} (A.2.14)	O	
		Acceleration – error {x, y, z} (A.2.15)	O	Implementation (B.4.1 – Error model)
		Kinematic point {x, y, z} (A.2.16)	C (B.2.2 – Signal: Orientation rate kinematic point {yaw} (A.2.18))	
		Kinematic point – error {x, y, z} (A.2.17)	O	Implementation (B.4.1 – Error model)
		Orientation rate kinematic point {yaw} (A.2.18)	O	

© ISO 2020 – All rights reserved

Copyright International Organization for Standardization
Provided by IHS Markit under license with ANSI
No reproduction or networking permitted without license from IHS

Order Number: W2233726
Sold to:APTIV [222021100001] - RUTH.M.MONTANO@APTIV.COM,
Not for Resale,2020-08-07 18:02:38 UTC

		Orientation rate kinematic point – error {yaw} (A.2.19)	O	Implementation (B.4.1 – Error model)
		Road level (A.2.20)	O	
		Movement status (A.2.21)	O	
Potentially moving object bounding box	C (B.2.1 – Relevant: camera)	Dimension {length, width, height} (A.2.22)	{M, M, O}	
		Dimension – error {length, width, height} (A.2.23)	O	Implementation (B.4.1 – Error model)
		Bounding box ground clearance (A.2.24)	O	
		Included geometric structures (A.2.25)	O	
Potentially moving object type certainty	M	Existence probability – object level (A.2.26)	M	
		Number of valid potentially moving object probability classifications (A.2.27)	M	Optimize (B.1.1 – List length optimization) Alternative Unrolling tuple-lists (B.1.5 – Key: Potentially moving object classification probability type (A.2.28))
		Size type: dynamic/fixed Size #: Number of valid potentially moving object probability classifications (A.2.27)		
		Potentially moving object classification probability type (A.2.28)	M	Alternative: (B.1.3)
		Potentially moving object classification probability value (A.2.29)	M	
Potentially moving object lights	C (B.2.1 – Relevant: camera)	Number of valid lights (A.2.30)	M	Optimize (B.1.1 – List length optimization) Alternative Unrolling tuple-lists (B.1.5 – Key: Light type (A.2.31))
		Size type: dynamic/fixed Size #: Number of valid lights (A.2.30)		

Copyright International Organization for Standardization
Provided by IHS Markit under license with ANSI
No reproduction or networking permitted without license from IHS
Order Number: W2233726
Sold to:APTIV [222021100001] - RUTH.M.MONTANO@APTIV.COM,
Not for Resale,2020-08-07 18:02:38 UTC

		Light type (A.2.31)	M	Alternative: (B.1.3)
		Light status (A.2.32)	M	
Potentially moving object type person	C (B.2.1 – Relevant: camera)	Number of valid persons poses (A.2.33)	M	Optimize (B.1.1 – List length optimization) Alternative Unrolling tuple-lists (B.1.5 – Key: Person pose type (A.2.34))
		Size type: dynamic/fixed Size #: Number of valid persons poses (A.2.33)		
		Person pose type (A.2.34)	M	Alternative: (B.1.3)
		Person pose {yaw, pitch, roll} (A.2.35)	M	
		Person pose – error {yaw, pitch, roll} (A.2.36)	O	Implementation (B.4.1 – Error model)
Lane related information	O	Object lane association (A.2.37)	M	
		Angle to object edge to lane {left edge right lane, right edge left lane} (A.2.38)	O	
		Angle to object edge to lane – error {left edge right lane, right edge left lane} (A.2.39)	O	Implementation (B.4.1 – Error model)
		Percentage side lane {left, right} (A.2.40)	O	
Motion related information	O	Angular position {azimuth} (A.2.41)	M	
		Angular velocity {azimuth} (A.2.42)	M	
Camera sensor specific	C (B.2.1 – Relevant: camera)	Scale change – object level (A.2.43)	M	
Radar sensor specific	C (B.2.1 – Relevant: radar)	Entity radar cross section (A.2.44)	M	
Lidar sensor specific	C (B.2.1 – Relevant: lidar)	Entity lidar reflectivity (A.2.45)	M	

© ISO 2020 – All rights reserved

Copyright International Organization for Standardization
Provided by IHS Markit under license with ANSI
No reproduction or networking permitted without license from IHS
Order Number: W2233726
Sold to:APTIV [222021100001] - RUTH.M.MONTANO@APTIV.COM,
Not for Resale,2020-08-07 18:02:38 UTC

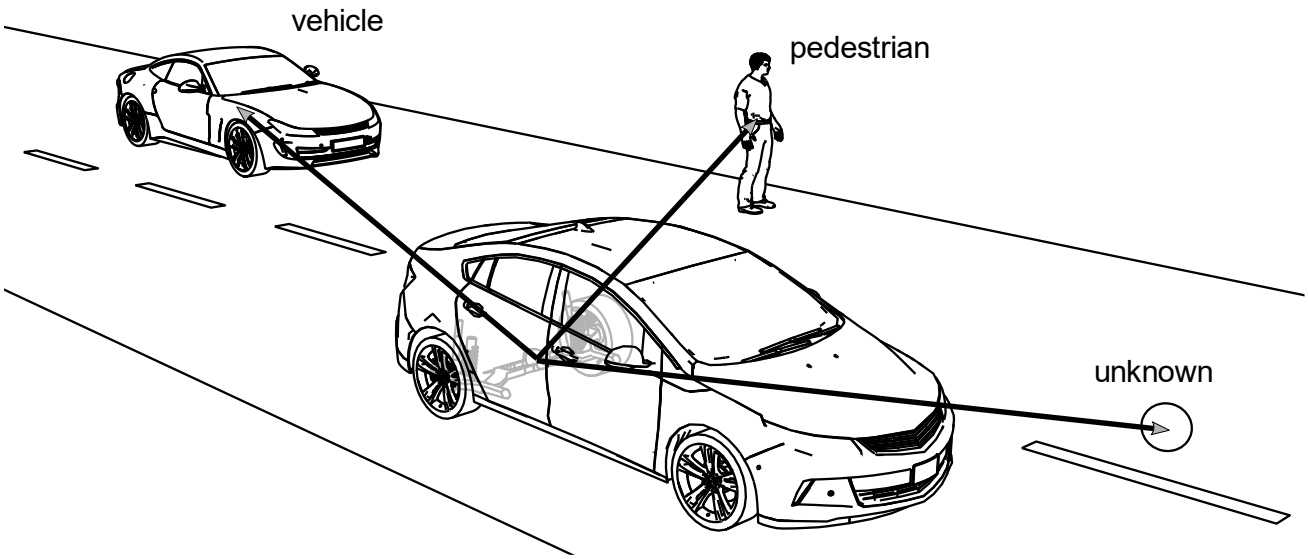

Figure 8 — Potentially moving objects example

7.2.1 Potentially moving object header

Table 10 defines the LSG Potentially moving object header (7.2.1) and the changes due to the customization in comparison to the LSG Generic object level header (7.1.1). The Potentially moving object header (7.2.1) contains a list of valid potentially moving object entities.

© ISO 2020 – All rights reserved

Copyright International Organization for Standardization
Provided by IHS Markit under license with ANSI
No reproduction or networking permitted without license from IHS
Order Number: W2233726
Sold to:APTIV [222021100001] - RUTH.M.MONTANO@APTIV.COM,
Not for Resale,2020-08-07 18:02:38 UTC

Table 10 — Logical signal group: Potentially moving object header

Signal	RL signal	Option
Version ID {major, minor, patch} (A.1.1)	Mandatory	
Sensor ID (A.1.2)	Mandatory	
Interface ID (A.1.3)	Optional	
Time stamp – predicted (A.1.4.1)	Mandatory	
Cycle counter (A.1.5.1)	Optional	Redundancy (B.1.2 – Signal: Time stamp – predicted (A.1.4.1))
Interface cycle time (A.1.6)	Optional	
Interface cycle time – variation (A.1.7)	Optional	
Data qualifier (A.1.8)	Mandatory	
Tracking motion model (A.1.12)	Optional	
Motion type (A.1.13)	Conditional (B.2.2 – Signal: Velocity {x, y, z} (A.2.12), Velocity – error {x, y, z} (A.2.13), Acceleration {x, y, z} (A.2.14), Acceleration – error {x, y, z} (A.2.15), Orientation rate kinematic point {yaw} (A.2.18) or Orientation rate kinematic point – error {yaw} (A.2.19))	
Recognized potentially moving objects – capability (A.1.9.1)	Optional	
Recognized potentially moving objects – status (A.1.10.1)	Optional	
Number of valid potentially moving objects (A.1.11.1)	Mandatory	Optimize (B.1.1 – List length optimization)

7.2.2 Potentially moving object entity

Each potentially moving object describes a recognized real-world object and consists of several LSGs. Each object, which may move, even if it might have not moved yet since first recognition of the real-world object, is an entity of potentially moving objects.

A potential moving object is described by the following LSGs for potentially moving objects with attributes for different parts (vehicle, pedestrian, etc.):

— **Status:** The status describes general information of the tracked potentially moving object. This information is based on history of the object tracking. Table 11 defines the LSG potentially moving object entity status. It defines the status of the potentially moving object and redefines LSG generic object level entity status (see Table 8).

© ISO 2020 – All rights reserved

Copyright International Organization for Standardization
Provided by IHS Markit under license with ANSI
No reproduction or networking permitted without license from IHS

Order Number: W2233726
Sold to:APTIV [222021100001] - RUTH.M.MONTANO@APTIV.COM,
Not for Resale,2020-08-07 18:02:38 UTC

— **Dynamics:** The dynamics describes the absolute motion information of the tracked potentially moving object.

— **Bounding box:** The object bounding box describes the 3D rectangular hull that encloses the recognized object.

— **Type certainty:** The type certainty describes properties such as the probability and confidence of an object type.

— **Lights:** The lights describe the status of the tracked potentially moving object's lights.

— **Type person:** The type person describes poses of a tracked pedestrian if the tracked potentially moving object is a pedestrian.

— **Lane related information:** The lane related information describes the tracked potentially moving object in relation with real-world lanes.

— **Motion related information:** The motion related information describes additional motion information of the tracked potentially moving object.

— **Camera sensor specific:** The camera sensor specific data describe dynamic information in the camera projection plane.

— **Radar sensor specific:** The radar sensor specific data describe different surface and material properties of the potentially moving object w.r.t. radar.

— **Lidar sensor specific:** The lidar sensor specific data describes different surface and material properties of the potentially moving object w.r.t. lidar (e.g. reflection strength of a surface).

Table 11 — Logical signal group: Potentially moving object entity – Status

Signal	RL signal	Option
Object ID (A.2.1)	Mandatory	Alternative (B.3.2)
Object grouping ID (A.2.2)	Optional	
Age (A.2.3)	Mandatory	
Observation – object level (A.2.4)	Optional	Redundancy (B.1.2 – Signal: Object ID (A.2.1), Cycle counter (A.1.5.1))
Track quality (A.2.5)	Optional	
Measurement status – object level (A.2.6)	Mandatory	

Potentially moving objects may be linked together (e.g. a truck with a trailer) or a construction site vehicle with a traffic sign at the rear of the vehicle) by using the same Object grouping ID (A.2.2) value.

© ISO 2020 – All rights reserved

Copyright International Organization for Standardization
Provided by IHS Markit under license with ANSI
No reproduction or networking permitted without license from IHS
Order Number: W2233726
Sold to:APTIV [222021100001] - RUTH.M.MONTANO@APTIV.COM,
Not for Resale,2020-08-07 18:02:38 UTC

7.3 Road object interface

The road object interface (RDOI) consists of general road surface information and two categories of objects: road markings and road boundaries. Table 12 provides the logical interface of the road object interface.

Table 12 — Road object interface

LSG	RL LSG M/C/O	Signal	RL signal M/C/O	Option
Header information	M	Version ID {major, minor, patch} (A.1.1)	M	
		Sensor ID (A.1.2)	M	
		Interface ID (A.1.3)	O	
		Time stamp – predicted (A.1.4.1)	M	
		Cycle counter (A.1.5.1)	O	Redundancy (B.1.2 – Signal: Time stamp – predicted (A.1.4.1))
		Interface cycle time (A.1.6)	O	
		Interface cycle time – variation (A.1.7)	O	
		Data qualifier (A.1.8)	M	
		Colour model type (A.1.14)	C (B.2.1 – Relevant: camera)	Optimize (B.1.3 – Use enumeration to define colours by defining colour values and the applied colour model for each enumerator)
Road surface	C (B.2.3 – multiple entity lists)	Road type (A.2.46)	M	
		Number of valid road surface classifications (A.2.47)	M	Optimize (B.1.1 – List length optimization) Alternative Unrolling tuple-lists (B.1.5 – Key: Road surface type (A.2.48))
		Size type: dynamic/fixed Size #: Number of valid road surface classifications (A.2.47)		
		Road surface type (A.2.48)	M	Alternative: (B.1.3)
		Road surface probability value (A.2.49)	M	

© ISO 2020 – All rights reserved

Copyright International Organization for Standardization
Provided by IHS Markit under license with ANSI
No reproduction or networking permitted without license from IHS

Order Number: W2233726
Sold to:APTIV [222021100001] - RUTH.M.MONTANO@APTIV.COM,
Not for Resale,2020-08-07 18:02:38 UTC

		Number of valid road surface condition classifications (A.2.50)	O	Optimize (B.1.1 – List length optimization) Alternative Unrolling tuple-lists (B.1.5 – Key: Road surface condition type (A.2.51))
		Size type: dynamic/fixed Size #: Number of valid road surface condition classifications (A.2.50)		
		Road surface condition type (A.2.51)	M	Alternative: (B.1.3)
		Road surface condition probability value (A.2.52)	M	
		Road surface roughness (A.2.53)	O	
Road markings	C (B.2.3 – multiple entity lists)	Recognized road markings – capability (A.1.9.2)	O	
		Recognized road markings – status (A.1.10.2)	O	
		Number of valid road markings (A.1.11.2)	M	Optimize (B.1.1 – List length optimization)
		Size type: dynamic/fixed Size #: Number of valid road markings (A.1.11.2)		
Road marking status	M	Object ID (A.2.1)	M	Alternative (B.3.2)
		Object grouping ID (A.2.2)	O	
		Age (A.2.3)	M	
		Observation – object level (A.2.4)	O	Redundancy (B.1.2 – Signal: Object ID (A.2.1), Cycle counter (A.1.5.1))
		Track quality (A.2.5)	O	
		Measurement status – object level (A.2.6)	M	
Road marking type certainty	M	Existence probability – object level (A.2.26)	M	
Road marking information	M	Number of valid road marking types (A.2.54)	M	Optimize (B.1.1 – List length optimization)
		Size type: dynamic/fixed Size #: Number of valid road marking types (A.2.54)		
		Road marking type (A.2.55)	M	

Copyright International Organization for Standardization
Provided by IHS Markit under license with ANSI
No reproduction or networking permitted without license from IHS
Order Number: W2233726
Sold to:APTIV [222021100001] - RUTH.M.MONTANO@APTIV.COM,
Not for Resale,2020-08-07 18:02:38 UTC

		Road marking type – confidence (A.2.56)	M	
		Arrow orientation (A.2.57)	O	
		Arrow direction (A.2.58)	M	
		Sign type (A.2.59)	O	
		Sign type – confidence (A.2.60)	O	
		Sign value (A.2.61)	O	
		Sign value unit (A.2.62)	O	
		Size type: dynamic/fixed Size #[4]: depends on Colour model type (A.1.14)		
		Colour value – object level (A.2.63)	M	
		Colour classification – confidence (A.2.64)	O	
Road marking polynomials	C (B.2.1 – Relevant: camera, lidars)	Number of valid connections (A.2.65)	M	Optimize (B.1.1 – List length optimization) Alternative Unrolling tuple-lists (B.1.5 – Key: Connection type (A.2.66))
		Size type: dynamic/fixed Size #: Number of valid connections (A.2.65)		
		Connection type (A.2.66)	M	Alternative: (B.1.3)
		Connection ID (A.2.67)	M	
		Number of valid polynomials (A.2.68)	M	Optimize (B.1.1 – List length optimization)
		Size type: dynamic/fixed Size #: Number of valid polynomials (A.2.68)		
		Polynomial coefficient {c0, c1, c2, c3} (A.2.69)	M	
		Polynomial – error (A.2.70)	O	Implementation (B.4.1 – Error model)
		Polynomial range x {start, end} (A.2.71)	M	
		Width – polynomial (A.2.72)	O	

[4] Implicit list length – Optimize (B.1.1 - List length optimization)

© ISO 2020 – All rights reserved

Copyright International Organization for Standardization
Provided by IHS Markit under license with ANSI
No reproduction or networking permitted without license from IHS

Order Number: W2233726
Sold to:APTIV [222021100001] - RUTH.M.MONTANO@APTIV.COM,
Not for Resale,2020-08-07 18:02:38 UTC

		Width – polynomial – error (A.2.73)	O	Implementation (B.4.1 – Error model)
		Width – polynomial – confidence (A.2.74)	O	
		Height – polynomial (A.2.75)	O	
		Height – polynomial – error (A.2.76)	O	Implementation (B.4.1 – Error model)
		Height – polynomial – confidence (A.2.77)	O	
		Number of valid data ranges (A.2.78)	O	Optimize (B.1.1 – List length optimization)
		Size type: dynamic/fixed Size #: Number of valid data ranges (A.2.78)		
		Supported data range x {start, end} (A.2.79)	M	
Road marking polyline	C (B.2.1 – Relevant: camera, lidars)	Number of valid connections (A.2.65)	M	Optimize (B.1.1 – List length optimization) Alternative Unrolling tuple-lists (B.1.5 – Key: Connection type (A.2.66))
		Size type: dynamic/fixed Size #: Number of valid connections (A.2.65)		
		Connection type (A.2.66)	M	Alternative: (B.1.3)
		Connection ID (A.2.67)	M	
		Polyline interpolation method (A.2.80)	M	
		Number of valid polylines (A.2.81)	M	Optimize (B.1.1 – List length optimization)
		Size type: dynamic/fixed Size #: Number of valid polylines (A.2.81)		
		Number of valid vertices (A.2.82)	M	Optimize (B.1.1 – List length optimization)
		Size type: dynamic/fixed Size #: Number of valid vertices (A.2.82)		
		Vertex point {x, y, z} (A.2.83)	M	

© ISO 2020 – All rights reserved

Copyright International Organization for Standardization
Provided by IHS Markit under license with ANSI
No reproduction or networking permitted without license from IHS

Order Number: W2233726
Sold to:APTIV [222021100001] - RUTH.M.MONTANO@APTIV.COM,
Not for Resale,2020-08-07 18:02:38 UTC

		Vertex point – error {x, y, z} (A.2.84)	M	Implementation (B.4.1 – Error model)
		Vertex point – confidence {x, y, z} (A.2.85)	O	
		Width – vertex (A.2.86)	O	
		Width – vertex – error (A.2.87)	O	Implementation (B.4.1 – Error model)
		Width – vertex – confidence (A.2.88)	O	
		Height – vertex (A.2.89)	O	
		Height – vertex – error (A.2.90)	O	Implementation (B.4.1 – Error model)
		Height – vertex – confidence (A.2.91)	O	
Road boundaries	C (B.2.3 – multiple entity lists)	Recognized road boundaries – capability (A.1.9.3)	O	
		Recognized road boundaries – status (A.1.10.3)	O	
		Number of valid road boundaries (A.1.11.3)	M	Optimize (B.1.1 – List length optimization)
		Size type: dynamic/fixed Size #: Number of valid road boundaries (A.1.11.3)		
Road boundary status	M	Object ID (A.2.1)	M	Alternative (B.3.2)
		Object grouping ID (A.2.2)	O	
		Age (A.2.3)	M	
		Observation – object level (A.2.4)	O	Redundancy (B.1.2 – Signal: Object ID (A.2.1), Cycle counter (A.1.5.1))
		Track quality (A.2.5)	O	
		Measurement status – object level (A.2.6)	M	
Road boundary type certainty	M	Existence probability – object level (A.2.26)	M	

© ISO 2020 – All rights reserved

Copyright International Organization for Standardization
Provided by IHS Markit under license with ANSI
No reproduction or networking permitted without license from IHS

Order Number: W2233726
Sold to:APTIV [222021100001] - RUTH.M.MONTANO@APTIV.COM,
Not for Resale,2020-08-07 18:02:38 UTC

Road boundary information	M	Number of valid road boundary types (A.2.92)	M	Optimize (B.1.1 – List length optimization) Alternative Unrolling tuple-lists (B.1.5 – Key: Road boundary type (A.2.93))
		Size type: dynamic/fixed Size #: Number of valid road boundary types (A.2.92)		
		Road boundary type (A.2.93)	M	Alternative: (B.1.3)
		Road boundary type – confidence (A.2.94)	M	
		Lane boundary role (A.2.95)	O	
		Lane boundary role – confidence (A.2.96)	O	
Road boundary properties	C (B.2.1 – Relevant: camera)	Size type: dynamic/fixed Size #[5]: depends on Colour model type (A.1.14)		
		Colour value – object level (A.2.63)	M	
		Colour classification – confidence (A.2.64)	O	
Road boundary polynomials	C (B.2.1 – Relevant: camera, lidar, radar)	Number of valid polynomials (A.2.68)	M	Optimize (B.1.1 – List length optimization)
		Size type: dynamic/fixed Size #: Number of valid polynomials (A.2.68)		
		Polynomial coefficient {c0, c1, c2, c3} (A.2.69)	M	
		Polynomial – error (A.2.70)	O	Implementation (B.4.1 – Error model)
		Polynomial range x {start, end} (A.2.71)	M	
		Width – polynomial (A.2.72)	O	
		Width – polynomial – error (A.2.73)	O	Implementation (B.4.1 – Error model)
		Width – polynomial – confidence (A.2.74)	O	
		Height – polynomial (A.2.75)	O	

[5] Implicit list length – Optimize (B.1.1 - List length optimization)

Copyright International Organization for Standardization
Provided by IHS Markit under license with ANSI
No reproduction or networking permitted without license from IHS
Order Number: W2233726
Sold to:APTIV [222021100001] - RUTH.M.MONTANO@APTIV.COM,
Not for Resale,2020-08-07 18:02:38 UTC

		Height – polynomial – error (A.2.76)	O	Implementation (B.4.1 – Error model)
		Height – polynomial – confidence (A.2.77)	O	
		Number of valid data ranges (A.2.78)	O	Optimize (B.1.1 – List length optimization)
		Size type: dynamic/fixed Size #: Number of valid data ranges (A.2.78)		
		Supported data range x {start, end} (A.2.79)	M	
Road boundary polyline	C (B.2.1 – Relevant: camera, lidar, radar)	Polyline interpolation method (A.2.80)	M	
		Number of valid polylines (A.2.81)	M	Optimize (B.1.1 – List length optimization)
		Size type: dynamic/fixed Size #: Number of valid polylines (A.2.81)		
		Number of valid vertices (A.2.82)	M	Optimize (B.1.1 – List length optimization)
		Size type: dynamic/fixed Size #: Number of valid vertices (A.2.82)		
		Vertex point {x, y, z} (A.2.83)	M	
		Vertex point – error {x, y, z} (A.2.84)	M	Implementation (B.4.1 – Error model)
		Vertex point – confidence {x, y, z} (A.2.85)	O	
		Width – vertex (A.2.86)	O	
		Width – vertex – error (A.2.87)	O	Implementation (B.4.1 – Error model)
		Width – vertex – confidence (A.2.88)	O	
		Height – vertex (A.2.89)	O	
		Height – vertex – error (A.2.90)	O	Implementation (B.4.1 – Error model)
		Height – vertex – confidence (A.2.91)	O	

© ISO 2020 – All rights reserved

Copyright International Organization for Standardization
Provided by IHS Markit under license with ANSI
No reproduction or networking permitted without license from IHS

Order Number: W2233726
Sold to:APTIV [222021100001] - RUTH.M.MONTANO@APTIV.COM,
Not for Resale,2020-08-07 18:02:38 UTC

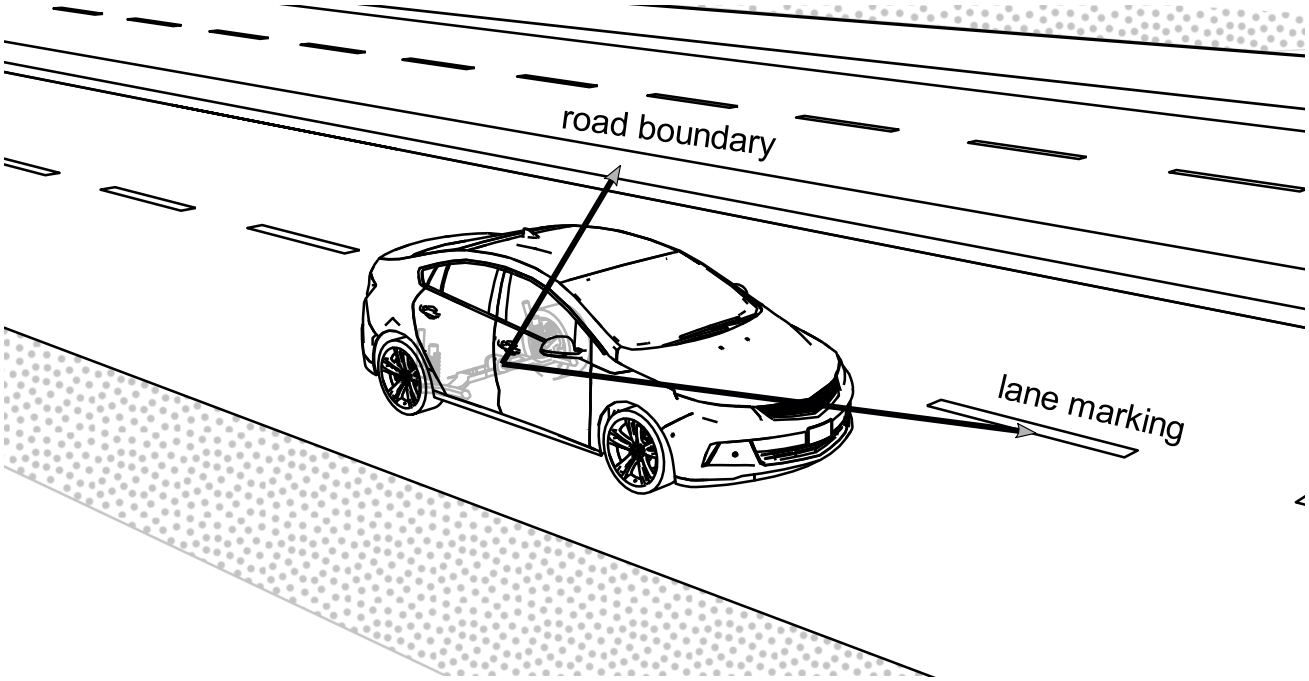

Figure 9 — Road objects example

7.3.1 Road object header

Table 13 defines the LSG Road object header (7.3.1) and the changes due to the customization in comparison to the LSG Generic object level header (7.1.1). The Road object header (7.3.1) contains not only one list of entities. It contains a list of valid road marking entities and a list of valid road marking boundary entities. Road surface is exact one entity.

Copyright International Organization for Standardization
Provided by IHS Markit under license with ANSI
No reproduction or networking permitted without license from IHS
Order Number: W2233726
Sold to:APTIV [222021100001] - RUTH.M.MONTANO@APTIV.COM,
Not for Resale,2020-08-07 18:02:38 UTC

Table 13 — Logical signal group: Road object header

Signal	RL signal		Option
Version ID {major, minor, patch} (A.1.1)	Mandatory		
Sensor ID (A.1.2)	Mandatory		
Interface ID (A.1.3)	Optional		
Time stamp – predicted (A.1.4.1)	Mandatory		
Cycle counter (A.1.5.1)	Optional		Redundancy (B.1.2 – Signal: Time stamp – predicted (A.1.4.1))
Interface cycle time (A.1.6)	Optional		
Interface cycle time – variation (A.1.7)	Optional		
Data qualifier (A.1.8)	Mandatory		
Colour model type (A.1.14)	Conditional (B.2.1- Relevant: camera)		Optimize (B.1.3 – Use enumeration to define colours by defining colour values and the applied colour model for each enumerator)
Recognized road markings – capability (A.1.9.2)	RL LSG Conditional (B.2.3 – multiple entity lists)	Optional	
Recognized road markings – status (A.1.10.2)		Optional	
Number of valid road markings (A.1.11.2)		Mandatory	Optimize (B.1.1 – List length optimization)
Recognized road boundaries – capability (A.1.9.3)		Optional	
Recognized road boundaries – status (A.1.10.3)		Optional	
Number of valid road boundaries (A.1.11.3)		Mandatory	Optimize (B.1.1 – List length optimization)

7.3.2 Road object entity

Each road object describes a recognized real-world road marking or road boundary and consists of several LSGs. The RDOI specifies the relevant road surface for the ego-vehicle in driving direction.

The road surface is described by the road surface LSG.

A road marking is described by the following LSGs for road marking:

— **Status:** The general information describes a tracked road marking. This information is based on history of the object tracking. Table 14 defines the LSG Road object entity – Status. It defines the status of the road marking and redefines LSG Generic object level entity – Status (see Table 8).

© ISO 2020 – All rights reserved

Copyright International Organization for Standardization
Provided by IHS Markit under license with ANSI
No reproduction or networking permitted without license from IHS

Order Number: W2233726
Sold to:APTIV [222021100001] - RUTH.M.MONTANO@APTIV.COM,
Not for Resale,2020-08-07 18:02:38 UTC

— **Type certainty:** The type certainty describes the existence probability and possible road marking types and confidences.

— **Properties:** The properties describe different visual properties related to the road marking.

— Contour:

  — **Polynomials:** The polynomials of a road marking describe the detailed shape and bounds in a 3D vector space with polynomial lines.

  — **Polyline:** The polyline of a road marking describes the detailed shape and bounds in a 3D vector space with a polyline and a defined interpolation method.

A road boundary is described by the following LSGs for road boundary:

— **Status:** The general information describes a tracked road boundary. This information is based on history of the object tracking. Table 14 defines the LSG Road object entity – Status. It defines the status of the road boundary and redefines LSG Generic object level entity – Status (see Table 8).

— **Type certainty:** The type certainty describes the existence probability and possible road boundary types and confidences.

— **Properties:** The properties describe different visual properties related to the road boundary.

— Contour:

  — **Polynomials:** The polynomials of a road boundary describe the detailed shape and bounds in a 3D vector space with polynomial lines.

  — **Polyline:** The polyline of a road boundary describes the detailed shape and bounds in a 3D vector space with a polyline and a defined interpolation method.

Table 14 — Logical signal group: Road object entity – Status

Signal	RL signal	Option
Object ID (A.2.1)	Mandatory	Alternative (B.3.2)
Object grouping ID (A.2.2)	Optional	
Age (A.2.3)	Mandatory	
Observation – object level (A.2.4)	Optional	Redundancy (B.1.2 – Signal: Object ID (A.2.1), Cycle counter (A.1.5.1))
Track quality (A.2.5)	Optional	
Measurement status – object level (A.2.6)	Mandatory	

A road markings connection is defined by road marking contours with a unique Connection ID (A.2.67) and a type of the connection. The road marking contour is specified with road marking polynomials and

© ISO 2020 – All rights reserved

Copyright International Organization for Standardization
Provided by IHS Markit under license with ANSI
No reproduction or networking permitted without license from IHS
Order Number: W2233726
Sold to:APTIV [222021100001] - RUTH.M.MONTANO@APTIV.COM,
Not for Resale,2020-08-07 18:02:38 UTC

road marking polylines which refer to the road markings connection by Connection type (A.2.66) and Connection ID (A.2.67).

Road markings and road boundaries can be represented either by polynomials of degree 3 or by polylines consisting of one or more segments merged at the vertex points. See Figure 10 and Annex section for details.

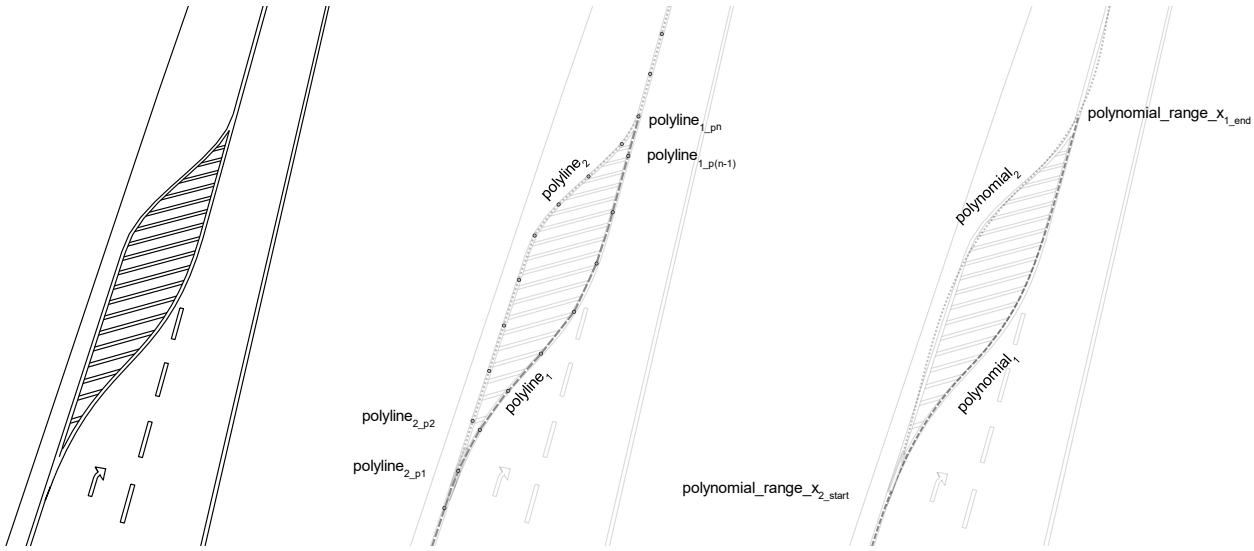

Key

Left: Real-world scene

Middle: Polyline contour representation

Right: Polynomial contour representation

Figure 10 — Alternative contour representation examples

7.4 Static object interface

The static object interface (SOI) consists of three categories of entities: general landmarks, traffic signs (traffic main sign and additional supplementary signs) and traffic lights. Table 15 provides the logical interface of the static object interface.

Table 15 — Static object interface

LSG	RL LSG M/C/O	Signal	RL signal M/C/O	Option
Header information	M	Version ID {major, minor, patch} (A.1.1)	M	
		Sensor ID (A.1.2)	M	
		Interface ID (A.1.3)	O	
		Time stamp – predicted (A.1.4.1)	M	

© ISO 2020 – All rights reserved

Copyright International Organization for Standardization
Provided by IHS Markit under license with ANSI
No reproduction or networking permitted without license from IHS

Order Number: W2233726
Sold to:APTIV [222021100001] - RUTH.M.MONTANO@APTIV.COM,
Not for Resale,2020-08-07 18:02:38 UTC

		Cycle counter (A.1.5.1)	O	Redundancy (B.1.2 – Signal: Time stamp – predicted (A.1.4.1))
		Interface cycle time (A.1.6)	O	
		Interface cycle time – variation (A.1.7)	O	
		Data qualifier (A.1.8)	M	
General landmarks	C (B.2.3 – multiple entity lists)	Recognized general landmarks – capability (A.1.9.4)	O	
		Recognized general landmarks – status (A.1.10.4)	O	
		Number of valid general landmarks (A.1.11.4)	M	Optimize (B.1.1 – List length optimization)
		Size type: dynamic/fixed Size #: Number of valid general landmarks (A.1.11.4)		
General landmark status	M	Object ID (A.2.1)	M	Alternative (B.3.2)
		Object grouping ID (A.2.2)	O	
		Age (A.2.3)	M	
		Observation – object level (A.2.4)	O	Redundancy (B.1.2 – Signal: Object ID (A.2.1), Cycle counter (A.1.5.1))
		Track quality (A.2.5)	O	
		Measurement status – object level (A.2.6)	M	
General landmark type certainty	M	Existence probability – object level (A.2.26)	M	
		Number of valid general landmark classifications (A.2.97)	M	Optimize (B.1.1 – List length optimization) Alternative Unrolling tuple-lists (B.1.5 – Key: General landmark classification type (A.2.98))
		Size type: dynamic/fixed Size #: Number of valid general landmark classifications (A.2.97)		

Copyright International Organization for Standardization
Provided by IHS Markit under license with ANSI
No reproduction or networking permitted without license from IHS
Order Number: W2233726
Sold to:APTIV [222021100001] - RUTH.M.MONTANO@APTIV.COM,
Not for Resale,2020-08-07 18:02:38 UTC

		General landmark classification type (A.2.98)	M	Alternative: (B.1.3)
		General landmark classification probability value (A.2.99)	M	
		General landmark classification confidence (A.2.100)	M	
General landmark object position	M	Reference point (A.2.7)	O	
		Position {x, y, z} (A.2.8)	M	
		Position – error {x, y, z} (A.2.9)	M	Implementation (B.4.1 – Error model)
		Orientation – object level {vertical} (A.2.101)	O	
		Orientation – object level – error {vertical} (A.2.102)	O	Implementation (B.4.1 – Error model)
General landmark object bounding box	C (B.2.1 – Relevant: camera)	Dimension {length, width, height} (A.2.22)	{M, M, C (B.2.1)}	
		Dimension – error {length, width, height} (A.2.23)	O	Implementation (B.4.1 – Error model)
Traffic signs	C (B.2.3 – multiple entity lists)	Recognized traffic signs – capability (A.1.9.5)	O	
		Recognized traffic signs – status (A.1.10.5)	O	
		Number of valid traffic signs (A.1.11.5)	M	Optimize (B.1.1 – List length optimization)
		Size type: dynamic/fixed Size #: Number of valid traffic signs (A.1.11.5)		
Traffic main sign status	M	Object ID (A.2.1)	M	Alternative (B.3.2)
		Object grouping ID (A.2.2)	O	
		Age (A.2.3)	M	
		Observation – object level (A.2.4)	O	Redundancy (B.1.2 – Signal: Object ID (A.2.1), Cycle counter (A.1.5.1))
		Track quality (A.2.5)	O	
		Measurement status – object level (A.2.6)	M	
Traffic main sign type	M	Existence probability – object level (A.2.26)	M	

© ISO 2020 – All rights reserved

Copyright International Organization for Standardization
Provided by IHS Markit under license with ANSI
No reproduction or networking permitted without license from IHS

Order Number: W2233726
Sold to:APTIV [222021100001] - RUTH.M.MONTANO@APTIV.COM,
Not for Resale,2020-08-07 18:02:38 UTC

		Sign type (A.2.59)	M	
		Sign type – confidence (A.2.60)	M	
Traffic main sign information	M	Sign value (A.2.61)	M	
		Sign value unit (A.2.62)	M	
		Sign geometry (A.2.103)	M	
		Variable message sign (A.2.104)	M	
		Out of service (A.2.105)	M	
Traffic main sign position	M	Lane relevance (A.2.106)	M	
		Lane relevance – confidence (A.2.107)	M	
		Position {x, y, z} (A.2.8)	M	
		Position – error {x, y, z} (A.2.9)	M	Implementation (B.4.1 – Error model)
Supplementary signs	M	Number of valid traffic supplementary signs (A.2.108)	M	Optimize (B.1.1 – List length optimization)
		Size type: dynamic/fixed Size #: Number of valid traffic supplementary signs (A.2.108)		
Supplementary sign status	M	Age (A.2.3)	M	
		Observation – object level (A.2.4)	O	
		Track quality (A.2.5)	O	
		Measurement status – object level (A.2.6)	M	
Supplementary sign type	M	Existence probability – object level (A.2.26)	M	
		Supplementary sign type (A.2.109)	M	
		Supplementary sign type – confidence (A.2.110)	M	
Supplementary sign information	M	Sign value (A.2.61)	M	
		Sign value unit (A.2.62)	M	
		Out of service (A.2.105)	M	
Supplementary sign position	M	Relative position (A.2.111)	M	
		Relative position order (A.2.112)	M	
Traffic lights		Recognized traffic lights – capability (A.1.9.6)	O	
		Recognized traffic lights – status (A.1.10.6)	O	

© ISO 2020 – All rights reserved

Copyright International Organization for Standardization
Provided by IHS Markit under license with ANSI
No reproduction or networking permitted without license from IHS

Order Number: W2233726
Sold to:APTIV [222021100001] - RUTH.M.MONTANO@APTIV.COM,
Not for Resale,2020-08-07 18:02:38 UTC

	C (B.2.3 – multiple entity lists)	Number of valid traffic lights (A.1.11.6)	M	Optimize (B.1.1 – List length optimization)
		Size type: dynamic/fixed Size #: Number of valid traffic lights (A.1.11.6)		
Traffic light status	M	Object ID (A.2.1)	M	Alternative (B.3.2)
		Object grouping ID (A.2.2)	O	
		Age (A.2.3)	M	
		Observation – object level (A.2.4)	O	Redundancy (B.1.2 – Signal: Object ID (A.2.1), Cycle counter (A.1.5.1))
		Track quality (A.2.5)	O	
		Measurement status – object level (A.2.6)	M	
Traffic light type certainty	M	Existence probability – object level (A.2.26)	M	
		Structure light type (A.2.113)	M	
		Structure light type – confidence (A.2.114)	M	
Traffic light position	M	Minimum visibility distance (A.2.115)	M	
		Reference point (A.2.7)	O	
		Position {x, y, z} (A.2.8)	M	
		Position – error {x, y, z} (A.2.9)	M	Implementation (B.4.1 – Error model)
		Orientation – object level {vertical} (A.2.101)	O	
		Orientation – object level – error {vertical} (A.2.102)	O	Implementation (B.4.1 – Error model)
Traffic light bounding box	C (B.2.1 – Relevant: camera)	Dimension {length, width, height} (A.2.22)	{O, M, M}	
		Dimension – error {length, width, height} (A.2.23)	O	Implementation (B.4.1 – Error model)
Traffic light spots	M	Total number of traffic light spots (A.2.116)	O	
		Total number of traffic light spots – confidence (A.2.117)	O	

© ISO 2020 – All rights reserved

Copyright International Organization for Standardization
Provided by IHS Markit under license with ANSI
No reproduction or networking permitted without license from IHS

Order Number: W2233726
Sold to:APTIV [222021100001] - RUTH.M.MONTANO@APTIV.COM,
Not for Resale,2020-08-07 18:02:38 UTC

		Number of valid traffic light spots (A.2.118)	M	Optimize (B.1.1 – List length optimization)
		Size type: dynamic/fixed Size #: Number of valid traffic light spots (A.2.118)		
Traffic light spot status	M	Age (A.2.3)	M	
		Observation – object level (A.2.4)	O	
		Track quality (A.2.5)	O	
		Measurement status – object level (A.2.6)	M	
Traffic light spot type certainty	M	Existence probability – object level (A.2.26)	M	
Traffic light spot colour	M	Number of valid colour classifications (A.2.119)	M	Optimize (B.1.1 – List length optimization) Alternative Unrolling tuple-lists (B.1.5 – Key: Colour type (A.2.120))
		Size type: dynamic/fixed Size #: Number of valid colour classifications (A.2.119)		
		Colour type (A.2.120)	M	Alternative: (B.1.3)
		Colour probability value (A.2.121)	M	
		Colour – confidence (A.2.122)	M	
		Number of valid light mode classifications (A.2.123)	M	Optimize (B.1.1 – List length optimization) Alternative Unrolling tuple-lists (B.1.5 – Key: Light mode type (A.2.124))
		Size type: dynamic/fixed Size #: Number of valid light mode classifications (A.2.123)		
		Light mode type (A.2.124)	M	Alternative: (B.1.3)
		Light mode probability value (A.2.125)	M	

Copyright International Organization for Standardization
Provided by IHS Markit under license with ANSI
No reproduction or networking permitted without license from IHS
Order Number: W2233726
Sold to:APTIV [222021100001] - RUTH.M.MONTANO@APTIV.COM,
Not for Resale,2020-08-07 18:02:38 UTC

			Light mode – confidence (A.2.126)	M	
Traffic light spot shape	M		Light shape (A.2.127)	M	
			Light shape – confidence (A.2.128)	M	
			Light shape – value (A.2.129)	C (B.2.2 – Signal: see footnote[6])	
Traffic light spot position	M		Position {x, y, z} (A.2.8)	M	
			Position – error {x, y, z} (A.2.9)	M	Implementation (B.4.1 – Error model)

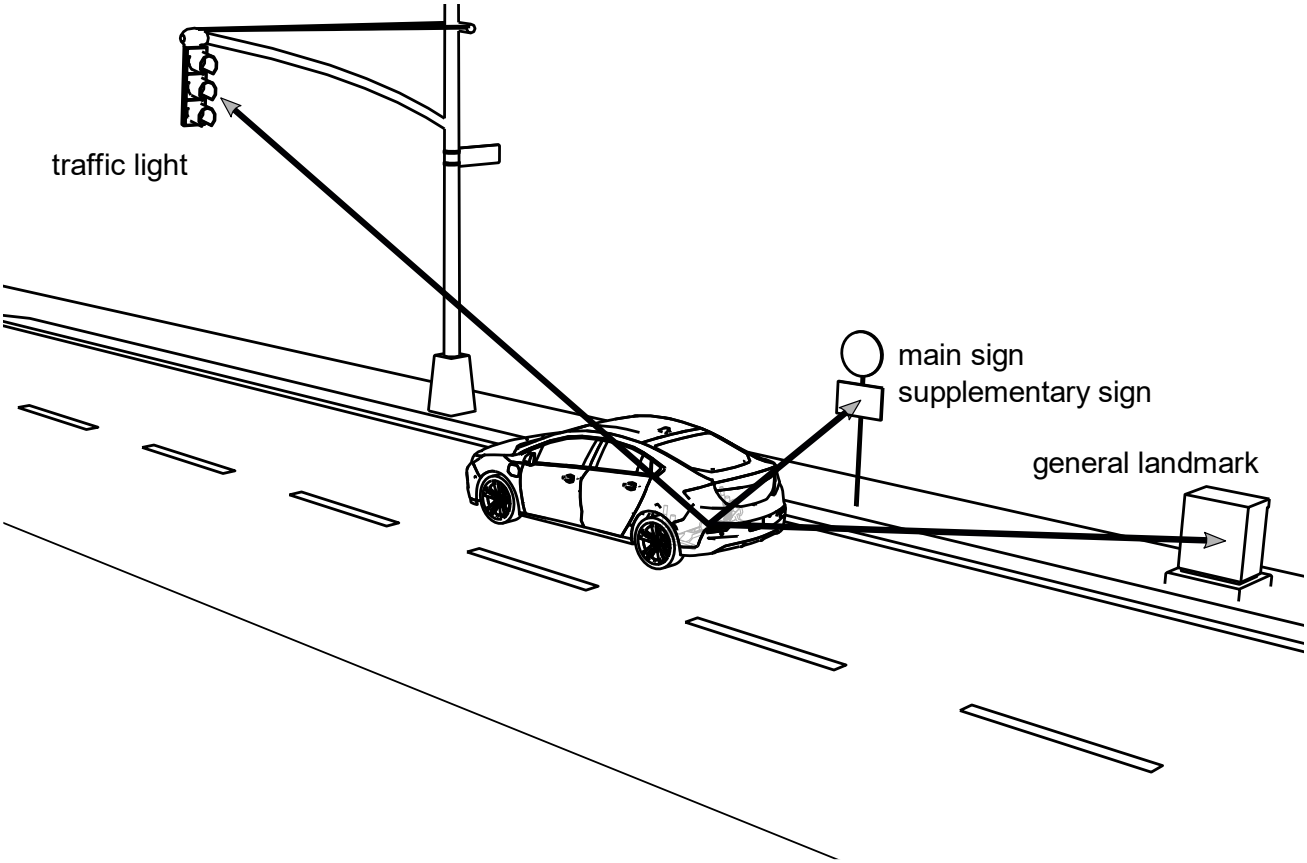

Figure 11 — Static objects example

[6] Light shape (A.2.127) has enumerator “LightShape_CountdownSecond” or “LightShape_CountdownPercent”

© ISO 2020 – All rights reserved

Copyright International Organization for Standardization
Provided by IHS Markit under license with ANSI
No reproduction or networking permitted without license from IHS

Order Number: W2233726
Sold to:APTIV [222021100001] - RUTH.M.MONTANO@APTIV.COM,
Not for Resale,2020-08-07 18:02:38 UTC

7.4.1 Static object header

Table 16 defines the LSG Static object header (7.4.1) and the changes due to the customization in comparison to the LSG Generic object level header (7.1.1). The Static object header (7.4.1) contains not only one list of entities. It contains a list of valid general landmarks, a list of valid traffic signs and a list of valid traffic light entities.

Table 16 — Logical signal group: Static object header

Signal	RL signal		Option
Version ID {major, minor, patch} (A.1.1)	Mandatory		
Sensor ID (A.1.2)	Mandatory		
Interface ID (A.1.3)	Optional		
Time stamp – predicted (A.1.4.1)	Mandatory		
Cycle counter (A.1.5.1)	Optional		Redundancy (B.1.2 – Signal: Time stamp – predicted (A.1.4.1))
Interface cycle time (A.1.6)	Optional		
Interface cycle time – variation (A.1.7)	Optional		
Data qualifier (A.1.8)	Mandatory		
Recognized general landmarks – capability (A.1.9.4)	RL LSG Conditional (B.2.3 – multiple entity lists)	Optional	
Recognized general landmarks – status (A.1.10.4)		Optional	
Number of valid general landmarks (A.1.11.4)		Mandatory	Optimize (B.1.1 – List length optimization)
Recognized traffic signs – capability (A.1.9.5)		Optional	
Recognized traffic signs – status (A.1.10.5)		Optional	
Number of valid traffic signs (A.1.11.5)		Mandatory	Optimize (B.1.1 – List length optimization)
Recognized traffic lights – capability (A.1.9.6)		Optional	
Recognized traffic lights – status (A.1.10.6)		Optional	
Number of valid traffic lights (A.1.11.6)		Mandatory	Optimize (B.1.1 – List length optimization)

7.4.2 Static object entity

Each static object describes a recognized real-world general landmark, traffic sign or traffic light and consists of several LSGs. The traffic sign consists of a main sign and none, one or more supplementary signs. A main sign is a traffic sign that can be followed on its own (e.g. stop sign). A supplementary sign is a sign with conditions under which the main sign is valid (e.g. under wet conditions only).

© ISO 2020 – All rights reserved

Copyright International Organization for Standardization
Provided by IHS Markit under license with ANSI
No reproduction or networking permitted without license from IHS

Order Number: W2233726
Sold to:APTIV [222021100001] - RUTH.M.MONTANO@APTIV.COM,
Not for Resale,2020-08-07 18:02:38 UTC

A general landmark is described by the following LSGs:

- **Status:** The status describes general information of the tracked general landmark. This information is based on history of the object tracking. Table 17 defines the LSG Static object entity – Status. It defines the status of the general landmark and redefines LSG Generic object level entity – Status (see Table 8).

- **Type certainty:** The type certainty describes the existence probability and the general landmark type and confidence.

- **Object position:** The object position describes the position information of the tracked object.

- **Object bounding box:** The object bounding box describes the 3D rectangular hull that encloses the recognized object.

A traffic sign is described by the following LSGs:

- **Main sign status:** The main sign status describes general information of the tracked sign. This information is based on history of the object tracking. Table 17 defines the LSG Static object entity – Status. It defines the status of the main sign and redefines LSG Generic object level entity – Status (see Table 8).

- **Main sign type:** The main sign type describes the existence probability and the main sign type and confidence.

- **Main sign position:** The main sign position describes the geometric position of the main sign and the relevance for the ego-vehicle driving lane.

- A list of supplementary signs assigned to the main sign:

  - **Supplementary sign status:** The supplementary sign status describes general information of the tracked sign. This information is based on history of the object tracking and is associated to the main traffic sign. Supplementary signs use a subset of signals of the LSG Static object entity – Status (Table 17).

  - **Supplementary sign type:** The supplementary sign type describes the existence probability and the supplementary sign type and confidence.

  - **Supplementary sign information:** The supplementary sign information describes the semantic of the supplementary sign.

  - **Supplementary sign position:** The supplementary sign position describes the qualitative position of the supplementary sign w.r.t the main sign and other supplementary signs.

A traffic light is described by the following LSGs:

- **Status:** The status describes general information of the tracked traffic light. This information is based on history of the object tracking. Table 17 defines the LSG Static object entity – Status. It defines the status of the traffic light and redefines LSG Generic object level entity – Status (see Table 8).

- **Type certainty:** The type certainty describes the existence probability.

© ISO 2020 – All rights reserved

Copyright International Organization for Standardization
Provided by IHS Markit under license with ANSI
No reproduction or networking permitted without license from IHS

Order Number: W2233726
Sold to:APTIV [222021100001] - RUTH.M.MONTANO@APTIV.COM,
Not for Resale,2020-08-07 18:02:38 UTC

— **Position:** The position describes the position information of the tracked traffic light.

— **Bounding Box:** The object bounding box describes the 3D rectangular hull that encloses the tracked traffic light.

— **Geometry:** The geometry describes the semantic grouping of the tracked traffic light.

— A list of traffic light spots assigned to the traffic light:

  — **Traffic light spot status:** The status describes general information of the tracked light spot. This information is based on history of the object tracking and is associated to the traffic light. Traffic light spots use a subset of signals of the LSG Static object entity – Status (Table 17).

  — **Traffic light spot certainty:** The type certainty describes the existence probability and the tracked light spot.

  — **Traffic light spot colour:** The colour describes the basic light colour of the tracked light spot.

  — **Traffic light spot shape:** The shape describes the semantic shape of the tracked light spot.

  — **Traffic light spot position:** The position describes the position of the tracked light spot which is relative to the vehicle coordinate system. All traffic light spots are inside the Traffic light bounding box.

Table 17 — Logical signal group: Static object entity – Status

Signal	RL signal	Option
Object ID (A.2.1)	Mandatory	Alternative (B.3.2)
Object grouping ID (A.2.2)	Optional	
Age (A.2.3)	Mandatory	
Observation – object level (A.2.4)	Optional	Redundancy (B.1.2 – Signal: Object ID (A.2.1), Cycle counter (A.1.5.1))
Track quality (A.2.5)	Optional	
Measurement status – object level (A.2.6)	Mandatory	

8 Feature level

The feature level interfaces (FLI) provide recognized features, where recognition is based on a small amount of historical data or no historical data at all. The sensor refers its recognized features to one of two pre-defined vehicle coordinate systems. Feature properties depend on the sensor technology. To bring recognized features in relation to entities of other interface levels, each recognized feature has a unique Feature ID (A.3.2) value. The uniqueness of the Feature ID (A.3.2) value is only guaranteed within the sensor's interfaces.

© ISO 2020 – All rights reserved

Copyright International Organization for Standardization
Provided by IHS Markit under license with ANSI
No reproduction or networking permitted without license from IHS
Order Number: W2233726
Sold to:APTIV [222021100001] - RUTH.M.MONTANO@APTIV.COM,
Not for Resale,2020-08-07 18:02:38 UTC

Wrong link relations between detections and features must be prevented. I.e. the reuse of Feature ID (A.3.2) values shall not lead to a misinterpretation of the link relation between entities of the sensor's interfaces.

On feature level the following interfaces are available:

— Camera feature interface (8.2)

— Ultrasonic feature interface (8.3)

There is no FLI for radar or lidar sensors defined.

8.1 Generic sensor feature interface

Table 18 defines the structure of a generic FLI.

Table 18 — Generic sensor feature interface

Structure	Multiplicity	Option
Generic sensor feature header (8.1.1)	1	
Individual feature list interface entity	*Multiple*	*Size type: dynamic/fixed*

© ISO 2020 – All rights reserved

Copyright International Organization for Standardization
Provided by IHS Markit under license with ANSI
No reproduction or networking permitted without license from IHS
Order Number: W2233726
Sold to:APTIV [222021100001] - RUTH.M.MONTANO@APTIV.COM,
Not for Resale,2020-08-07 18:02:38 UTC

8.1.1 Generic sensor feature header

Table 19 defines the LSG Generic sensor feature header (8.1.1) and the changes due to the customization in comparison to the LSG Generic interface header (6.1).

Table 19 — Logical signal group: Generic sensor feature header

Signal	RL signal	Option
Version ID {major, minor, patch} (A.1.1)	Mandatory	
Sensor ID (A.1.2)	Mandatory	
Interface ID (A.1.3)	Optional	
Time stamp – predicted (A.1.4.1)	Mandatory	
Cycle counter (A.1.5.1)	Optional	Redundancy (B.1.2 – Signal: Time stamp – predicted (A.1.4.1))
Interface cycle time (A.1.6)	Optional	
Interface cycle time – variation (A.1.7)	Optional	
Data qualifier (A.1.8)	Mandatory	
Sensor-type specific extensions		
Recognized features – capability (A.1.9.7)	Optional	
Recognized features – status (A.1.10.7)	Optional	
Number of valid features (A.1.11.7)	Mandatory	Optimize (B.1.1 – List length optimization)

8.1.2 Generic sensor feature entity

Table 20 defines the generic LSG Generic sensor feature entity – Status.

Table 20 — Logical signal group: Generic sensor feature entity – Status

Signal	RL signal	Option
Feature existence probability (A.3.1)	Mandatory	
Feature ID (A.3.2)	Conditional (B.3.1 – Exist: DLI)	Alternative (B.3.2)
Object ID reference – feature level (A.3.3)	Conditional (B.3.1 – Exist: OLI)	Alternative (B.3.2)
Time stamp difference – feature level (A.3.4)	Mandatory	Optimize (B.1.4)
Observation – feature level (A.3.5)	Optional	Redundancy (B.1.2 – Signal: Feature ID (A.3.2) (if unique over time), Cycle counter (A.1.5.1))

© ISO 2020 – All rights reserved

Copyright International Organization for Standardization
Provided by IHS Markit under license with ANSI
No reproduction or networking permitted without license from IHS

Order Number: W2233726
Sold to:APTIV [222021100001] - RUTH.M.MONTANO@APTIV.COM,
Not for Resale,2020-08-07 18:02:38 UTC

This LSG is used for each feature. Geometric information of the feature references the vehicle coordinate system (see Vehicle coordinate system type (A.1.20)). Features reference objects of the sensor and detections of the sensor references features.

8.2 Camera feature interface

Table 21 provides an overview of the logical signals of the camera feature interface (CFI).

Table 21 — Camera feature interface

LSG	RL LSG M/C/O	Signal	RL signal M/C/O	Option
Header information	M	Version ID {major, minor, patch} (A.1.1)	M	
		Sensor ID (A.1.2)	M	
		Interface ID (A.1.3)	O	
		Time stamp – predicted (A.1.4.1)	M	
		Cycle counter (A.1.5.1)	O	Redundancy (B.1.2 – Signal: Time stamp – predicted (A.1.4.1))
		Interface cycle time (A.1.6)	O	
		Interface cycle time – variation (A.1.7)	O	
		Data qualifier (A.1.8)	M	
		Colour model type (A.1.14)	M	Optimize (B.1.3 – Use enumeration to define colours by defining colour values and the applied colour model for each enumerator)
Features	M	Recognized features – capability (A.1.9.7)	O	
		Recognized features – status (A.1.10.7)	O	
		Number of valid features (A.1.11.7)	M	Optimize (B.1.1 – List length optimization)
		Size type: dynamic/fixed Size #: Number of valid features (A.1.11.7)		
Status	M	Feature existence probability (A.3.1)	M	
		Feature ID (A.3.2)	C (B.3.1 – Exist: DLI)	Alternative (B.3.2)
		Object ID reference – feature level (A.3.3)	C (B.3.1 – Exist: OLI)	Alternative (B.3.2)

© ISO 2020 – All rights reserved

Copyright International Organization for Standardization
Provided by IHS Markit under license with ANSI
No reproduction or networking permitted without license from IHS
Order Number: W2233726
Sold to:APTIV [222021100001] - RUTH.M.MONTANO@APTIV.COM,
Not for Resale,2020-08-07 18:02:38 UTC

		Time stamp difference – feature level (A.3.4)	M	Optimize (B.1.4)
		Observation – feature level (A.3.5)	O	Redundancy (B.1.2 – Signal: Feature ID (A.3.2) (if unique over time), Cycle counter (A.1.5.1))
Shape information	M	Shape type – feature level (A.3.6)	M	
		Number of valid shape classifications – feature level (A.3.7)	M	Optimize (B.1.1 – List length optimization) Alternative Unrolling tuple-lists (B.1.5 – Key: Shape classification type – feature level (A.3.8))
		Size type: dynamic/fixed Size #: Number of valid shape classifications – feature level (A.3.7)		
		Shape classification type – feature level (A.3.8)	M	Alternative: (B.1.3)
		Shape classification probability value (A.3.9)	M	
		Size type: dynamic/fixed Size #[7]: depends on Colour model type (A.1.14)		
		Colour value – feature level (A.3.10)	M	
		Colour probability – feature level (A.3.11)	O	
Shape points	M	Number of valid shape points – feature level (A.3.12)	M	Optimize (B.1.1 – List length optimization)
		Size type: dynamic/fixed Size #: Number of valid shape points – feature level (A.3.12)		
		Point existence probability – feature level (A.3.13)	M	
		3D Position {x, y, z} (A.3.14)	M	
		3D Position – error {x, y, z} (A.3.15)	M	Implementation (B.4.1 – Error model)
Shape reference points	O	Number of valid shape reference points (A.3.16)	M	Optimize (B.1.1 – List length optimization)

[7] Implicit list length – Optimize (B.1.1 - List length optimization)

© ISO 2020 – All rights reserved

Copyright International Organization for Standardization
Provided by IHS Markit under license with ANSI
No reproduction or networking permitted without license from IHS
Order Number: W2233726
Sold to:APTIV [222021100001] - RUTH.M.MONTANO@APTIV.COM,
Not for Resale,2020-08-07 18:02:38 UTC

			Size type: dynamic/fixed Size #: Number of valid shape reference points (A.3.16)		
			Point existence probability – feature level (A.3.13)	M	
			3D Position {x, y, z} (A.3.14)	M	
			3D Position – error {x, y, z} (A.3.15)	M	Implementation (B.4.1 – Error model)
			Orientation normal {x, y, z} (A.3.17)	O	
			Orientation normal – error {x, y, z} (A.3.18)	O	Implementation (B.4.1 – Error model)
			Scaled translation rate {x, y, z} (A.3.19)	O	
			Scaled translation rate – error {x, y, z} (A.3.20)	O	Implementation (B.4.1 – Error model)
			Rotation rate {yaw, pitch, roll} (A.3.21)	O	
			Rotation rate – error {yaw, pitch, roll} (A.3.22)	O	Implementation (B.4.1 – Error model)
			Scale change – feature level (A.3.23)	O	
			Scale change – feature level – error (A.3.24)	O	Implementation (B.4.1 – Error model)

8.2.1 Camera feature header

Table 22 defines the LSG Camera feature header (8.2.1) and the changes due to the customization in comparison to the LSG Generic sensor feature header (8.1.1). The Camera feature header (8.2.1) contains a list of valid camera feature entities.

© ISO 2020 – All rights reserved

Copyright International Organization for Standardization
Provided by IHS Markit under license with ANSI
No reproduction or networking permitted without license from IHS
Order Number: W2233726
Sold to:APTIV [222021100001] - RUTH.M.MONTANO@APTIV.COM,
Not for Resale,2020-08-07 18:02:38 UTC

Table 22 — Logical signal group: Camera feature header

Signal	RL signal	Option
Version ID {major, minor, patch} (A.1.1)	Mandatory	
Sensor ID (A.1.2)	Mandatory	
Interface ID (A.1.3)	Optional	
Time stamp – predicted (A.1.4.1)	Mandatory	
Cycle counter (A.1.5.1)	Optional	Redundancy (B.1.2 – Signal: Time stamp – predicted (A.1.4.1))
Interface cycle time (A.1.6)	Optional	
Interface cycle time – variation (A.1.7)	Optional	
Data qualifier (A.1.8)	Mandatory	
Colour model type (A.1.14)	Mandatory	Optimize (B.1.3 – Use enumeration to define colours by defining colour values and the applied colour model for each enumerator)
Recognized features – capability (A.1.9.7)	Optional	
Recognized features – status (A.1.10.7)	Optional	
Number of valid features (A.1.11.7)	Mandatory	Optimize (B.1.1 – List length optimization)

8.2.2 Camera feature entity

For the camera, features are understood as shapes extracted from camera images. The shapes describe regions with the same semantic content.

Each feature of a camera sensor describes a detected measured and consists of several LSGs.

— **Status:** The status describes general information of the feature. This information is based on basic feature history information. Table 23 defines the LSG Camera feature entity – Status. It defines the status of the feature and redefines LSG Generic sensor feature entity – Status (see Table 20).

— **Shape information:** The shape information describes the attributes of the tracked shape.

— **Shape points:** The shape points describe the geometric vertices of the hull for the feature shape.

— **Shape reference points:** The shape reference points are shape segments of the feature which are distinctive reference points of the shape.

© ISO 2020 – All rights reserved

Copyright International Organization for Standardization
Provided by IHS Markit under license with ANSI
No reproduction or networking permitted without license from IHS

Order Number: W2233726
Sold to:APTIV [222021100001] - RUTH.M.MONTANO@APTIV.COM,
Not for Resale,2020-08-07 18:02:38 UTC

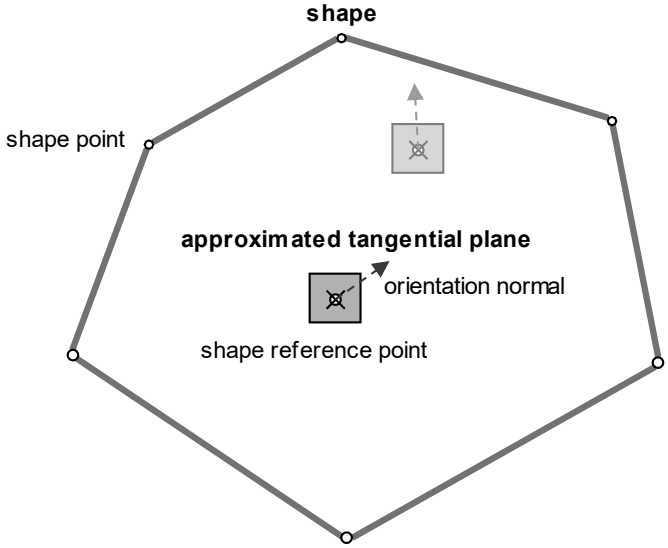

Figure 12 — Camera feature example

Table 23 — Logical signal group: Camera feature entity – Status

Signal	RL signal	Option
Feature existence probability (A.3.1)	Mandatory	
Feature ID (A.3.2)	Conditional (B.3.1 – Exist: DLI)	Alternative (B.3.2)
Object ID reference – feature level (A.3.3)	Conditional (B.3.1 – Exist: OLI)	Alternative (B.3.2)
Time stamp difference – feature level (A.3.4)	Mandatory	Optimize (B.1.4)
Observation – feature level (A.3.5)	Optional	Redundancy (B.1.2 – Signal: Feature ID (A.3.2) (if unique over time), Cycle counter (A.1.5.1))

8.3 Ultrasonic feature interface

Table 24 provides an overview of the logical signals of the ultrasonic feature interface (UFI).

Table 24 — Ultrasonic feature interface

LSG	RL LSG M/C/O	Signal	RL signal M/C/O	Option
Header information	M	Version ID {major, minor, patch} (A.1.1)	M	
		Sensor ID (A.1.2)	M	
		Interface ID (A.1.3)	O	
		Time stamp – predicted (A.1.4.1)	M	

© ISO 2020 – All rights reserved

Copyright International Organization for Standardization
Provided by IHS Markit under license with ANSI
No reproduction or networking permitted without license from IHS

Order Number: W2233726
Sold to:APTIV [222021100001] - RUTH.M.MONTANO@APTIV.COM,
Not for Resale,2020-08-07 18:02:38 UTC

		Cycle counter (A.1.5.1)	O	Redundancy (B.1.2 – Signal: Time stamp – predicted (A.1.4.1))
		Interface cycle time (A.1.6)	O	
		Interface cycle time – variation (A.1.7)	O	
		Data qualifier (A.1.8)	M	
Features	M	Recognized features – capability (A.1.9.7)	O	
		Recognized features – status (A.1.10.7)	O	
		Number of valid features (A.1.11.7)	M	Optimize (B.1.1 – List length optimization)
		Size type: dynamic/fixed Size #: Number of valid features (A.1.11.7)		
Status	M	Feature existence probability (A.3.1)	M	
		Feature ID (A.3.2)	C (B.3.1 – Exist: DLI)	Alternative (B.3.2)
		Object ID reference – feature level (A.3.3)	C (B.3.1 – Exist: OLI)	Alternative (B.3.2)
		Time stamp difference – feature level (A.3.4)	M	Optimize (B.1.4)
		Observation – feature level (A.3.5)	O	Redundancy (B.1.2 – Signal: Feature ID (A.3.2) (if unique over time), Cycle counter (A.1.5.1))
Segment information	M	Ultrasonic feature type (A.3.25)	M	
		Ultrasonic feature type probability value (A.3.26)	M	
Segment points	M	Number of valid points (A.3.27)	O	Optimize (B.1.1 – List length optimization)
		Size type: dynamic/fixed Size #: Number of valid points (A.3.27)		
		2D position {x, y} (A.3.28)	M	

© ISO 2020 – All rights reserved

Copyright International Organization for Standardization
Provided by IHS Markit under license with ANSI
No reproduction or networking permitted without license from IHS
Order Number: W2233726
Sold to:APTIV [222021100001] - RUTH.M.MONTANO@APTIV.COM,
Not for Resale,2020-08-07 18:02:38 UTC

				2D position – error {x, y} (A.3.29)	M	Implementation (B.4.1 – Error model)
				Orientation – feature level {vertical} (A.3.30)	O	
				Orientation – feature level – error {vertical} (A.3.31)	O	Implementation (B.4.1 – Error model)
				Height – feature level (A.3.32)	O	
				Height – feature level – error (A.3.33)	O	Implementation (B.4.1 – Error model)
				Velocity {x, y} (A.3.34)	O	
				Velocity – error {x, y} (A.3.35)	O	Implementation (B.4.1 – Error model)
				Trilateration status (A.3.36)	M	
				Measurement status – feature level (A.3.37)	O	

8.3.1 Ultrasonic feature header

Table 25 defines the LSG Ultrasonic feature header (8.3.1) and the changes due to the customization in comparison to the LSG Generic sensor feature header (8.1.1). The Ultrasonic feature header (8.3.1) contains a list of valid ultrasonic feature entities.

Table 25 — Logical signal group: Ultrasonic feature header

Signal	RL signal	Option
Version ID {major, minor, patch} (A.1.1)	Mandatory	
Sensor ID (A.1.2)	Mandatory	
Interface ID (A.1.3)	Optional	
Time stamp – predicted (A.1.4.1)	Mandatory	
Cycle counter (A.1.5.1)	Optional	Redundancy (B.1.2 – Signal: Time stamp – predicted (A.1.4.1))
Interface cycle time (A.1.6)	Optional	
Interface cycle time – variation (A.1.7)	Optional	
Data qualifier (A.1.8)	Mandatory	
Recognized features – capability (A.1.9.7)	Optional	
Recognized features – status (A.1.10.7)	Optional	
Number of valid features (A.1.11.7)	Mandatory	Optimize (B.1.1 – List length optimization)

© ISO 2020 – All rights reserved

Copyright International Organization for Standardization
Provided by IHS Markit under license with ANSI
No reproduction or networking permitted without license from IHS
Order Number: W2233726
Sold to:APTIV [222021100001] - RUTH.M.MONTANO@APTIV.COM,
Not for Resale,2020-08-07 18:02:38 UTC

8.3.2 Ultrasonic feature entity

Each feature of an ultrasonic sensor describes a measured feature and consists of several LSGs.

— **Status:** The status describes general information of the feature. This information is based on basic feature history information. Table 26 defines the LSG Ultrasonic feature entity – Status. It defines the status of the feature and redefines LSG Generic sensor feature entity – Status (see Table 20).

— **Segment information:** The segment information describes the attributes of the tracked segment.

— **Segment points:** The segment points describe the geometric vertices of the hull for the feature segment.

Table 26 — Logical signal group: Ultrasonic feature entity – Status

Signal	RL signal	Option
Feature existence probability (A.3.1)	Mandatory	
Feature ID (A.3.2)	Conditional (B.3.1 – Exist: DLI)	Alternative (B.3.2)
Object ID reference – feature level (A.3.3)	Conditional (B.3.1 – Exist: OLI)	Alternative (B.3.2)
Time stamp difference – feature level (A.3.4)	Mandatory	Optimize (B.1.4)
Observation – feature level (A.3.5)	Optional	Redundancy (B.1.2 – Signal: Feature ID (A.3.2) (if unique over time), Cycle counter (A.1.5.1))

9 Detection level

The detection level interfaces (DLI) provide recognized detections. The detections may be based on limited historical data and are rated with individual existence probability values. Detections are defined in the individual sensor coordinate system. The properties of the detections depend on the sensor technology. The uniqueness of the Feature ID (A.3.2) values resp. Object ID (A.2.1) values is only guaranteed within the sensor's interfaces.

On detection level the following interfaces are available:

— Radar detection interface (9.2)

— Lidar detection interface (9.3)

— Camera detection interface (9.4)

— Ultrasonic detection interface (9.5)

© ISO 2020 – All rights reserved

Copyright International Organization for Standardization
Provided by IHS Markit under license with ANSI
No reproduction or networking permitted without license from IHS

Order Number: W2233726
Sold to:APTIV [222021100001] - RUTH.M.MONTANO@APTIV.COM,
Not for Resale,2020-08-07 18:02:38 UTC

9.1 Generic sensor detection interface

Table 27 defines the structure of a generic DLI.

Table 27 — Generic sensor detection interface

Structure	Multiplicity	Option
Generic sensor detections header (9.1.1)	1	
Individual detection list interface entity	*Multiple*	*Size type: dynamic/fixed*

9.1.1 Generic sensor detections header

Table 28 defines LSG Generic sensor detections header (9.1.1) and the changes due to the customization in comparison to the LSG Generic interface header (6.1).

Table 28 — Logical signal group: Generic sensor detections header

Signal	RL signal	Option
Version ID {major, minor, patch} (A.1.1)	Mandatory	
Sensor ID (A.1.2)	Mandatory	
Interface ID (A.1.3)	Optional	
Time stamp – measurement (A.1.4.2)	Mandatory	
Cycle counter (A.1.5.1)	Optional	Redundancy (B.1.2 – Signal: Time stamp – measurement (A.1.4.2))
Interface cycle time (A.1.6)	Optional	
Interface cycle time – variation (A.1.7)	Optional	
Data qualifier (A.1.8)	Mandatory	
Sensor-type specific extensions		
Recognized detections – capability (A.1.9.8)	Optional	
Recognized detections – status (A.1.10.8)	Optional	
Number of valid detections (A.1.11.8)	Mandatory	Optimize (B.1.1 – List length optimization)

9.1.2 Generic sensor detections entity

Table 29 defines the LSG Generic sensor detections entity – Status. It defines the status of the detection.

© ISO 2020 – All rights reserved

Copyright International Organization for Standardization
Provided by IHS Markit under license with ANSI
No reproduction or networking permitted without license from IHS

Order Number: W2233726
Sold to:APTIV [222021100001] - RUTH.M.MONTANO@APTIV.COM,
Not for Resale,2020-08-07 18:02:38 UTC

Table 29 — Logical signal group: Generic sensor detections entity – Status

Signal	RL signal	Option
Existence probability – detection level (A.4.1)	Mandatory	
Object ID reference – detection level (A.4.2)	Conditional (B.3.1 – Exist: OLI)	Alternative (B.3.2)
Feature ID reference (A.4.3)	Conditional (B.3.1 – Exist: FLI)	Alternative (B.3.2)
Time stamp difference – detection level (A.4.4)	Mandatory	Optimize (B.1.4)

This LSG is used for each detection. They are described in the sensor coordinate system. Detections reference entities of the OLI and FLI.

9.2 Radar detection interface

Table 30 provides an overview of the logical signals of the radar detection interface (RDI).

Table 30 — Radar detection interface

LSG	RL LSG M/C/O	Signal	RL signal M/C/O	Option
Header information	M	Version ID {major, minor, patch} (A.1.1)	M	
		Sensor ID (A.1.2)	M	
		Interface ID (A.1.3)	O	
		Time stamp – measurement (A.1.4.2)	M	
		Cycle counter (A.1.5.1)	O	Redundancy (B.1.2 – Signal: Time stamp – measurement (A.1.4.2))
		Interface cycle time (A.1.6)	O	
		Interface cycle time – variation (A.1.7)	O	
		Data qualifier (A.1.8)	M	
Header information ambiguity domain	M	Radial velocity ambiguity domain {begin, end} (A.1.15)	C (B.2.1)	Profile (9.2.3 – Radar ambiguity)
		Range ambiguity domain {begin, end} (A.1.16)	C (B.2.1)	Profile (9.2.3 – Radar ambiguity)
		Angle azimuth ambiguity domain {begin, end} (A.1.17)	C (B.2.1)	Profile (9.2.3 – Radar ambiguity)

© ISO 2020 – All rights reserved

Copyright International Organization for Standardization
Provided by IHS Markit under license with ANSI
No reproduction or networking permitted without license from IHS
Order Number: W2233726
Sold to:APTIV [222021100001] - RUTH.M.MONTANO@APTIV.COM,
Not for Resale,2020-08-07 18:02:38 UTC

		Angle elevation ambiguity domain {begin, end} (A.1.18)	C (B.2.1)	Profile (9.2.3 – Radar ambiguity)
Detections	M	Recognized detections – capability (A.1.9.8)	O	
		Recognized detections – status (A.1.10.8)	O	
		Number of valid detections (A.1.11.8)	M	Optimize (B.1.1 – List length optimization) Alternative Unrolling tuple-lists (B.1.5 – Key: Position {Azimuth, Elevation, Distance} (A.4.5) {Angle Elevation, Angle Azimuth})
		Size type: dynamic/fixed Size #: Number of valid detections (A.1.11.8)		
Status	M	Existence probability – detection level (A.4.1)	M	
		Object ID reference – detection level (A.4.2)	C (B.3.1 – Exist: OLI)	Alternative (B.3.2)
		Time stamp difference – detection level (A.4.4)	M	Optimize (B.1.4)
Information	M	Position {Azimuth, Elevation, Distance} (A.4.5)	M	Alternative: (B.1.3 – Signal: {Angle Elevation, Angle Azimuth})
		Position – error {Azimuth, Elevation, Distance} (A.4.6)	M	Implementation (B.4.1 – Error model)
		Radial relative velocity (A.4.7)	M	
		Radial relative velocity – error (A.4.8)	O	Implementation (B.4.1 – Error model)
		Radar cross section (A.4.9)	M	
		Radar cross section – error (A.4.10)	O	Implementation (B.4.1 – Error model)
		Signal to noise ratio – detection level (A.4.11)	M	
		Signal to noise ratio – detection level – error (A.4.12)	O	Implementation (B.4.1 – Error model)

--`,,,`,,,,`,`,`,,`,,,,,,,,,`,-`-`,,`,,`,`,,`---
© ISO 2020 – All rights reserved

Copyright International Organization for Standardization
Provided by IHS Markit under license with ANSI
No reproduction or networking permitted without license from IHS

Order Number: W2233726
Sold to:APTIV [222021100001] - RUTH.M.MONTANO@APTIV.COM,
Not for Resale,2020-08-07 18:02:38 UTC

			Multi target probability (A.4.13)	O	
			Ambiguity ID (A.4.14)	C (B.2.1 – ambiguity)	Profile (9.2.3 – Radar ambiguity)
			Detection ambiguity probability (A.4.15)	C (B.2.1 – ambiguity)	Profile (9.2.3 – Radar ambiguity)
			Free space probability (A.4.16)	O	
			Number of valid detection classifications (A.4.17)	O	Optimize (B.1.1 – List length optimization) Alternative Unrolling tuple-lists (B.1.5 – Key: Detection classification type (A.4.18))
			Size type: dynamic/fixed Size #: Number of valid detection classifications (A.4.17)		
			Detection classification type (A.4.18)	O	Alternative: (B.1.3)
			Detection classification probability value (A.4.19)	O	

9.2.1 Radar detections header

Table 31 defines the LSG Radar detections header (9.2.1) and the changes due to the customization in comparison to the LSG Generic sensor detections header (9.1.1). The Radar detections header (9.2.1) contains a list of valid radar detection entities.

Copyright International Organization for Standardization
Provided by IHS Markit under license with ANSI
No reproduction or networking permitted without license from IHS
Order Number: W2233726
Sold to:APTIV [222021100001] - RUTH.M.MONTANO@APTIV.COM,
Not for Resale,2020-08-07 18:02:38 UTC

Table 31 — Logical signal group: Radar detections header

Signal	RL signal	Option
Version ID {major, minor, patch} (A.1.1)	Mandatory	
Sensor ID (A.1.2)	Mandatory	
Interface ID (A.1.3)	Optional	
Time stamp – measurement (A.1.4.2)	Mandatory	
Cycle counter (A.1.5.1)	Optional	Redundancy (B.1.2 – Signal: Time stamp – measurement (A.1.4.2))
Interface cycle time (A.1.6)	Optional	
Interface cycle time – variation (A.1.7)	Optional	
Data qualifier (A.1.8)	Mandatory	
Radial velocity ambiguity domain {begin, end} (A.1.15)	Conditional (B.2.1 – technology specific)	Profile (9.2.3 – Radar ambiguity)
Range ambiguity domain {begin, end} (A.1.16)	Conditional (B.2.1 – technology specific)	Profile (9.2.3 – Radar ambiguity)
Angle azimuth ambiguity domain {begin, end} (A.1.17)	Conditional (B.2.1 – technology specific)	Profile (9.2.3 – Radar ambiguity)
Angle elevation ambiguity domain {begin, end} (A.1.18)	Conditional (B.2.1 – technology specific)	Profile (9.2.3 – Radar ambiguity)
Recognized detections – capability (A.1.9.8)	Optional	
Recognized detections – status (A.1.10.8)	Optional	
Number of valid detections (A.1.11.8)	Mandatory	Optimize (B.1.1 – List length optimization) Alternative Unrolling tuple-lists (B.1.5 – Key: Position {Azimuth, Elevation, Distance} (A.4.5) {Angle Elevation, Angle Azimuth})

9.2.2 Radar detections entity

Each detection of a radar sensor describes a measured detection and consists of several LSGs.

— **Status:** The status describes general information of the detection. It is based on current information and does not include historical information. Table 32 defines the LSG Radar detections entity – Status. It defines the status of the detection and redefines LSG Generic sensor detections entity – Status (see Table 29). There is no radar feature interface defined and therefore radar detections cannot reference radar features.

— **Information:** The information describes the position information of the detection in local sensor coordinate system and radar specific information of the detection.

© ISO 2020 – All rights reserved

Copyright International Organization for Standardization
Provided by IHS Markit under license with ANSI
No reproduction or networking permitted without license from IHS

Order Number: W2233726
Sold to:APTIV [222021100001] - RUTH.M.MONTANO@APTIV.COM,
Not for Resale,2020-08-07 18:02:38 UTC

Table 32 — Logical signal group: Radar detections entity – Status

Signal	RL signal	Option
Existence probability – detection level (A.4.1)	Mandatory	
Object ID reference – detection level (A.4.2)	Conditional (B.3.1 – Exist: OLI)	Alternative (B.3.2)
Time stamp difference – detection level (A.4.4)	Mandatory	Optimize (B.1.4)

There is no radar specific FLI. Therefore, the sensor cannot link the detection to a feature and signal Feature ID reference (A.4.3) is not provided.

9.2.3 Profile: Radar ambiguity

If the radar sensor technology has one or more technology depending ambiguities, signal Ambiguity ID (A.4.14) and Detection ambiguity probability (A.4.15) are mandatory. Depending on the ambiguity reason either Radial velocity ambiguity domain {begin, end} (A.1.15), Range ambiguity domain {begin, end} (A.1.16), Angle azimuth ambiguity domain {begin, end} (A.1.17), Angle elevation ambiguity domain {begin, end} (A.1.18) or multiple ambiguity reasons the corresponding signals are mandatory.

9.3 Lidar detection interface

Table 33 provides an overview of the logical signals of the lidar detection interface (LDI).

Table 33 — Lidar detection interface

LSG	RL LSG M/C/O	Signal	RL Signal M/C/O	Option
Header information	M	Version ID {major, minor, patch} (A.1.1)	M	
		Sensor ID (A.1.2)	M	
		Interface ID (A.1.3)	O	
		Time stamp – measurement (A.1.4.2)	M	
		Cycle counter (A.1.5.1)	O	Redundancy (B.1.2 – Signal: Time stamp – measurement (A.1.4.2))
		Interface cycle time (A.1.6)	O	
		Interface cycle time – variation (A.1.7)	O	
		Data qualifier (A.1.8)	M	
Detections	M	Recognized detections – capability (A.1.9.8)	O	
		Recognized detections – status (A.1.10.8)	O	

© ISO 2020 – All rights reserved

Copyright International Organization for Standardization
Provided by IHS Markit under license with ANSI
No reproduction or networking permitted without license from IHS
Order Number: W2233726
Sold to:APTIV [222021100001] - RUTH.M.MONTANO@APTIV.COM,
Not for Resale,2020-08-07 18:02:38 UTC

		Number of valid detections (A.1.11.8)	M	Optimize (B.1.1 – List length optimization) Alternative Unrolling tuple-lists (B.1.5 – Key: Position {Azimuth, Elevation, Distance} (A.4.5) {Angle Elevation, Angle Azimuth})
		Size type: dynamic/fixed Size #: Number of valid detections (A.1.11.8)		
Status	M	Existence probability – detection level (A.4.1)	M	
		Object ID reference – detection level (A.4.2)	C (B.3.1 – Exist: OLI)	Alternative (B.3.2)
		Time stamp difference – detection level (A.4.4)	M	Optimize (B.1.4)
Information	M	Position {Azimuth, Elevation, Distance} (A.4.5)	M	Alternative: (B.1.3 – Signal: {Angle Elevation, Angle Azimuth})
		Position – error {Azimuth, Elevation, Distance} (A.4.6)	M	Implementation (B.4.1 – Error model)
		Height – lidar (A.4.20)	O	
		Height – lidar – error (A.4.21)	C (B.2.2 – Signal: Height – lidar (A.4.20))	Implementation (B.4.1 – Error model)
		Radial relative velocity (A.4.7)	O	
		Radial relative velocity – error (A.4.8)	O	Implementation (B.4.1 – Error model)
		Reflectivity (A.4.22)	M	
		Reflectivity – error (A.4.23)	O	Implementation (B.4.1 – Error model)
		Free space probability (A.4.16)	O	
		Detection classification type (A.4.18)	O	

© ISO 2020 – All rights reserved

Copyright International Organization for Standardization
Provided by IHS Markit under license with ANSI
No reproduction or networking permitted without license from IHS

Order Number: W2233726
Sold to:APTIV [222021100001] - RUTH.M.MONTANO@APTIV.COM,
Not for Resale,2020-08-07 18:02:38 UTC

9.3.1 Lidar detection header

Table 34 defines the LSG Lidar detection header (9.3.1) and the changes due to the customization in comparison to the LSG Generic sensor detections header (9.1.1). The Lidar detection header (9.3.1) contains a list of valid lidar detection entities.

Table 34 — Logical signal group: Lidar detection header

Signal	RL signal	Option
Version ID {major, minor, patch} (A.1.1)	Mandatory	
Sensor ID (A.1.2)	Mandatory	
Interface ID (A.1.3)	Optional	
Time stamp – measurement (A.1.4.2)	Mandatory	
Cycle counter (A.1.5.1)	Optional	Redundancy (B.1.2 – Signal: Time stamp – measurement (A.1.4.2))
Interface cycle time (A.1.6)	Optional	
Interface cycle time – variation (A.1.7)	Optional	
Data qualifier (A.1.8)	Mandatory	
Recognized detections – capability (A.1.9.8)	Optional	
Recognized detections – status (A.1.10.8)	Optional	
Number of valid detections (A.1.11.8)	Mandatory	Optimize (B.1.1 – List length optimization) Alternative Unrolling tuple-lists (B.1.5 – Key: Position {Azimuth, Elevation, Distance} (A.4.5) {Angle Elevation, Angle Azimuth})

9.3.2 Lidar detection entity

Each detection of a lidar sensor describes a measured detection and consists of several LSGs.

— **Status:** The status describes general information of the detection. It is based on current information and does not include historical information. Table 35 defines the LSG Lidar detection entity – Status. It defines the status of the detection and redefines LSG Generic sensor detections entity – Status (see Table 29). There is no lidar feature interface defined and therefore lidar detections cannot reference lidar features.

— **Information:** The information describes the lidar specific information of the detection.

© ISO 2020 – All rights reserved

Copyright International Organization for Standardization
Provided by IHS Markit under license with ANSI
No reproduction or networking permitted without license from IHS

Order Number: W2233726
Sold to:APTIV [222021100001] - RUTH.M.MONTANO@APTIV.COM,
Not for Resale,2020-08-07 18:02:38 UTC

Table 35 — Logical signal group: Lidar detection entity – Status

Signal	RL signal	Option
Existence probability – detection level (A.4.1)	Mandatory	
Object ID reference – detection level (A.4.2)	Conditional (B.3.1 – Exist: OLI)	Alternative (B.3.2)
Time stamp difference – detection level (A.4.4)	Mandatory	Optimize (B.1.4)

There is no lidar specific FLI. Therefore, the sensor cannot link the detection to a feature and signal Feature ID reference (A.4.3) is not provided.

9.4 Camera detection interface

Table 36 provides an overview of the logical signals of the camera detection interface (CDI). Camera detections use shapes to define detections.

Table 36 — Camera detection interface

LSG	RL LSG M/C/O	Signal	RL Signal M/C/O	Option
Header information	M	Version ID {major, minor, patch} (A.1.1)	M	
		Sensor ID (A.1.2)	M	
		Interface ID (A.1.3)	O	
		Time stamp – measurement (A.1.4.2)	M	
		Cycle counter (A.1.5.1)	O	Redundancy (B.1.2 – Signal: Time stamp – measurement (A.1.4.2))
		Interface cycle time (A.1.6)	O	
		Interface cycle time – variation (A.1.7)	O	
		Data qualifier (A.1.8)	M	
		Colour model type (A.1.14)	M	Optimize (B.1.3 – Use enumeration to define colours by defining colour values and the applied colour model for each enumerator)
Shapes	M	Recognized shapes – capability (A.1.9.9)	O	
		Recognized shapes – status (A.1.10.9)	O	

© ISO 2020 – All rights reserved

Copyright International Organization for Standardization
Provided by IHS Markit under license with ANSI
No reproduction or networking permitted without license from IHS

Order Number: W2233726
Sold to:APTIV [222021100001] - RUTH.M.MONTANO@APTIV.COM,
Not for Resale,2020-08-07 18:02:38 UTC

		Number of valid shapes (A.1.11.9)	M	Optimize (B.1.1 – List length optimization)
		Size type: dynamic/fixed Size #: Number of valid shapes (A.1.11.9)		
Status	M	Existence probability – detection level (A.4.1)	M	
		Object ID reference – detection level (A.4.2)	C (B.3.1 – Exist: OLI)	Alternative (B.3.2)
		Feature ID reference (A.4.3)	C (B.3.1 – Exist: FLI)	Alternative (B.3.2)
		Time stamp difference – detection level (A.4.4)	M	Optimize (B.1.4)
Information	M	Shape type – detection level (A.4.24)	M	
		Free space probability (A.4.16)	O	
		Number of valid shape classifications – detection level (A.4.25)	M	Optimize (B.1.1 – List length optimization) Alternative Unrolling tuple-lists (B.1.5 – Key: Shape classification type – detection level (A.4.26))
		Size type: dynamic/fixed Size #: Number of valid shape classifications – detection level (A.4.25)		
		Shape classification type – detection level (A.4.26)	M	Alternative: (B.1.3)
		Shape classification variant (A.4.27)	M	
		Shape ambiguity ID (A.4.28)	C (B.2.1 – ambiguity)	
		Size type: dynamic/fixed Size #[8]: depends on Colour model type (A.1.14)		
		Colour value – detection level (A.4.29)	M	

[8] Implicit list length – Optimize (B.1.1 - List length optimization)

Copyright International Organization for Standardization
Provided by IHS Markit under license with ANSI
No reproduction or networking permitted without license from IHS
Order Number: W2233726
Sold to:APTIV [222021100001] - RUTH.M.MONTANO@APTIV.COM,
Not for Resale,2020-08-07 18:02:38 UTC

		Colour probability – detection level (A.4.30)	O	
Shape points	M	Number of valid shape points – detection level (A.4.31)	M	Optimize (B.1.1 – List length optimization)
		Size type: dynamic/fixed Size #: Number of valid shape points – detection level (A.4.31)		
		Point existence probability – detection level (A.4.32)	M	
		Position {Azimuth, Elevation, Distance} (A.4.5)	{O, M, M}	
		Position – error {Azimuth, Elevation, Distance} (A.4.6)	{C (B.2.2 – Signal: Position {Distance} (A.4.5))), M, M}	Implementation (B.4.1 – Error model)

9.4.1 Camera detection header

Table 37 defines the LSG Camera detection header (9.4.1) and the changes due to the customization in comparison to the LSG Generic sensor detections header (9.1.1). The Camera detection header (9.4.1) contains a list of valid camera detection entities.

© ISO 2020 – All rights reserved

Copyright International Organization for Standardization
Provided by IHS Markit under license with ANSI
No reproduction or networking permitted without license from IHS

Order Number: W2233726
Sold to:APTIV [222021100001] - RUTH.M.MONTANO@APTIV.COM,
Not for Resale,2020-08-07 18:02:38 UTC

Table 37 — Logical signal group: Camera detection header

Signal	RL signal	Option
Version ID {major, minor, patch} (A.1.1)	Mandatory	
Sensor ID (A.1.2)	Mandatory	
Interface ID (A.1.3)	Optional	
Time stamp – measurement (A.1.4.2)	Mandatory	
Cycle counter (A.1.5.1)	Optional	Redundancy (B.1.2 – Signal: Time stamp – measurement (A.1.4.2))
Interface cycle time (A.1.6)	Optional	
Interface cycle time – variation (A.1.7)	Optional	
Data qualifier (A.1.8)	Mandatory	
Colour model type (A.1.14)	Mandatory	Optimize (B.1.3 – Use enumeration to define colours by defining colour values and the applied colour model for each enumerator)
Recognized shapes – capability (A.1.9.9)	Optional	
Recognized shapes – status (A.1.10.9)	Optional	
Number of valid shapes (A.1.11.9)	Mandatory	Optimize (B.1.1 – List length optimization)

9.4.2 Camera detection entity

Each detection of a camera sensor describes a measured detection and consists of several LSGs.

- **Status:** The status describes general information of the detection. It is based on current information and does not include historical information. Table 38 defines the LSG Camera detection entity – Status. It defines the status of the detection and redefines LSG Generic sensor detections entity – Status (see Table 29).

- **Information:** The information describes the camera specific information of the detection.

- **Shape points:** The shape points describe the geometric vertices of the hull for the detection in sensor coordinate system.

© ISO 2020 – All rights reserved

Copyright International Organization for Standardization
Provided by IHS Markit under license with ANSI
No reproduction or networking permitted without license from IHS
Order Number: W2233726
Sold to:APTIV [222021100001] - RUTH.M.MONTANO@APTIV.COM,
Not for Resale,2020-08-07 18:02:38 UTC

Table 38 — Logical signal group: Camera detection entity – Status

Signal	RL signal	Option
Existence probability – detection level (A.4.1)	Mandatory	
Object ID reference – detection level (A.4.2)	Conditional (B.3.1 – Exist: OLI)	Alternative (B.3.2)
Feature ID reference (A.4.3)	Conditional (B.3.1 – Exist: FLI)	Alternative (B.3.2)
Time stamp difference – detection level (A.4.4)	Mandatory	Optimize (B.1.4)

9.5 Ultrasonic detection interface

Table 39 provides an overview of the logical signals of the ultrasonic detection interface (UDI).

Table 39 — Ultrasonic detection interface

LSG	RL LSG M/C/O	Signal	RL Signal M/C/O	Option
Header information	M	Version ID {major, minor, patch} (A.1.1)	M	
		Sensor ID (A.1.2)	M	
		Interface ID (A.1.3)	O	
		Time stamp – measurement (A.1.4.2)	M	
		Cycle counter (A.1.5.1)	O	Redundancy (B.1.2 – Signal: Time stamp – measurement (A.1.4.2))
		Interface cycle time (A.1.6)	O	
		Interface cycle time – variation (A.1.7)	O	
		Data qualifier (A.1.8)	M	
Detections	M	Recognized detections – capability (A.1.9.8)	O	
		Recognized detections – status (A.1.10.8)	O	
		Number of valid detections (A.1.11.8)	M	Optimize (B.1.1 – List length optimization)
		Size type: dynamic/fixed Size #: Number of valid detections (A.1.11.8)		
Status	M	Existence probability – detection level (A.4.1)	M	
		Object ID reference – detection level (A.4.2)	C (B.3.1 – Exist: OLI)	Alternative (B.3.2)

© ISO 2020 – All rights reserved

Copyright International Organization for Standardization
Provided by IHS Markit under license with ANSI
No reproduction or networking permitted without license from IHS

Order Number: W2233726
Sold to:APTIV [222021100001] - RUTH.M.MONTANO@APTIV.COM,
Not for Resale,2020-08-07 18:02:38 UTC

		Feature ID reference (A.4.3)	C (B.3.1 – Exist: FLI)	Alternative (B.3.2)
		Time stamp difference – detection level (A.4.4)	M	Optimize (B.1.4)
Inform ation	M	Reflectivity (A.4.22)	O	
		Ellipse semi-minor axis (A.4.33)	M	
		Ellipse semi-major axis (A.4.34)	C (B.2.1 – Relevant: virtual sensor)	
		Ellipse axes – error {Ellipse semi-minor axis, Ellipse semi-major axis} (A.4.35)	{M, C (B.2.2 – Signal: Ellipse semi-major axis (A.4.34))}	Implementation (B.4.1 – Error model)
		Height – ultrasonic (A.4.36)	C (B.2.1 – technology specific)	
		Height – ultrasonic – error (A.4.37)	O	

9.5.1 Ultrasonic detection header

Table 40 defines the LSG Ultrasonic detection header (9.5.1) and the changes due to the customization in comparison to the LSG Generic sensor detections header (9.1.1). The Ultrasonic detection header (9.5.1) contains a list of valid ultrasonic detection entities.

© ISO 2020 – All rights reserved

Copyright International Organization for Standardization
Provided by IHS Markit under license with ANSI
No reproduction or networking permitted without license from IHS
Order Number: W2233726
Sold to:APTIV [222021100001] - RUTH.M.MONTANO@APTIV.COM,
Not for Resale,2020-08-07 18:02:38 UTC

Table 40 — Logical signal group: Ultrasonic detection header

Signal	RL signal	Option
Version ID {major, minor, patch} (A.1.1)	Mandatory	
Sensor ID (A.1.2)	Mandatory	
Interface ID (A.1.3)	Optional	
Time stamp – measurement (A.1.4.2)	Mandatory	
Cycle counter (A.1.5.1)	Optional	Redundancy (B.1.2 – Signal: Time stamp – measurement (A.1.4.2))
Interface cycle time (A.1.6)	Optional	
Interface cycle time – variation (A.1.7)	Optional	
Data qualifier (A.1.8)	Mandatory	
Recognized detections – capability (A.1.9.8)	Optional	
Recognized detections – status (A.1.10.8)	Optional	
Number of valid detections (A.1.11.8)	Mandatory	Optimize (B.1.1 – List length optimization)

9.5.2 Ultrasonic detection entity

Each detection of an ultrasonic sensor describes a measured detection and consists of several LSGs.

— **Status:** The status describes general information of the detection. It is based on current information and does not include historical information. Table 41 defines the LSG Ultrasonic detection entity – Status. It defines the status of the detection and redefines LSG Generic sensor detections entity – Status (see Table 29).

— **Information:** The information describes the ultrasonic specific information of the echo (see Figure 13)

Table 41 — Logical signal group: Ultrasonic detection entity – Status

Signal	RL signal	Option
Existence probability – detection level (A.4.1)	Mandatory	
Object ID reference – detection level (A.4.2)	Conditional (B.3.1 – Exist: OLI)	Alternative (B.3.2)
Feature ID reference (A.4.3)	Conditional (B.3.1 – Exist: FLI)	Alternative (B.3.2)
Time stamp difference – detection level (A.4.4)	Mandatory	Optimize (B.1.4)

© ISO 2020 – All rights reserved

Copyright International Organization for Standardization
Provided by IHS Markit under license with ANSI
No reproduction or networking permitted without license from IHS

Order Number: W2233726
Sold to:APTIV [222021100001] - RUTH.M.MONTANO@APTIV.COM,
Not for Resale,2020-08-07 18:02:38 UTC

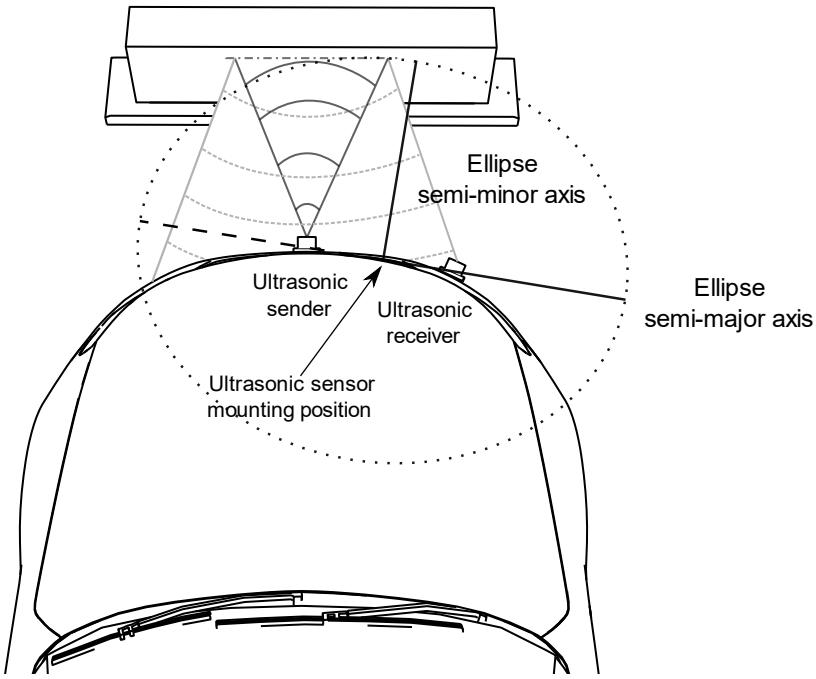

Figure 13 — Ultrasonic sensor with separate sending and sensing unit

10 Supportive sensor interfaces

The supportive sensor interfaces (SSI) provide additional, general information of the sensor's health and performance.

Table 42 — Brief overview over the differences and boundaries between the SSIs

Sensor performance		Sensor health information
Impairment on observed field	Impairment on sensor surface	Sensor internal
— rain, fog — snow — particles (air) — etc.	— dirt, dust — condensation — scratch — etc.	— operation — diagnosis — defects — cleaning — position calibration — etc.
Classification into several measurement ranges Misalignment at system level Extrinsic: software calibration Relevant for safety concept		Global information for the complete sensor Misalignment, intrinsic & system level: hardware calibration Relevant E/E information

The following supportive sensor interfaces are available:

— Sensor performance interface (10.2)

Copyright International Organization for Standardization
Provided by IHS Markit under license with ANSI
No reproduction or networking permitted without license from IHS
Order Number: W2233726
Sold to:APTIV [222021100001] - RUTH.M.MONTANO@APTIV.COM,
Not for Resale,2020-08-07 18:02:38 UTC

— Sensor health information interface (10.3)

Supportive sensor interface messages (Sensor performance interface (10.2), Sensor health information interface (10.3)) are required to interpret messages on object-, feature- and detection level. Data consistency over the sensor's interfaces shall be assured. Supportive sensor interfaces have LSGs which the sensor shall provide. If a SSI is not provided the SSI relevant LSG will be provided by other interfaces as defined (see Need of logical signal group (B.3.3)).

10.1 Generic supportive sensor interface

Table 43 defines the structure of a generic SSI.

Table 43 — Generic supportive sensor interface

Structure	Multiplicity	Option
Generic supportive sensor header (10.1.1)	1	
Individual supportive sensor interface body	*1 resp. multiple*	*Size type: dynamic/fixed*

The multiplicity of the individual supportive sensor interface entity list depends on the SSI interface.

10.1.1 Generic supportive sensor header

Table 44 defines the LSG Generic supportive sensor header (10.1.1) and the changes due to the customization in comparison to the LSG Generic interface header (6.1). The Time stamp – predicted (A.1.4.1) is an estimated time stamp of the algorithm for all supportive service information of the interface and the message.

Table 44 — Logical signal group: Generic supportive sensor header

Signal	RL signal	Option
Version ID {major, minor, patch} (A.1.1)	Mandatory	
Sensor ID (A.1.2)	Mandatory	
Interface ID (A.1.3)	Optional	
Time stamp – predicted (A.1.4.1)	Mandatory	
Message counter (A.1.5.2)	Optional	
Interface cycle time (A.1.6)	Optional	
Interface cycle time – variation (A.1.7)	Optional	
Data qualifier (A.1.8)	Mandatory	
Supportive sensor interface specific extensions		
Number of valid <…> (A.1.11)	Mandatory	Optimize (B.1.1 – List length optimization)

The SSIs will provide all list elements. Therefore, the header provides no Recognized <…> – capability (A.1.9) and Recognized <…> – status (A.1.10).

© ISO 2020 – All rights reserved

Copyright International Organization for Standardization
Provided by IHS Markit under license with ANSI
No reproduction or networking permitted without license from IHS

Order Number: W2233726
Sold to:APTIV [222021100001] - RUTH.M.MONTANO@APTIV.COM,
Not for Resale,2020-08-07 18:02:38 UTC

10.1.2 Generic supportive sensor entity

Geometric information of the supportive sensor information references the vehicle coordinate system (see Vehicle coordinate system type (A.1.20)) resp. sensor coordinate system.

10.2 Sensor performance interface

Table 45 provides an overview of the logical signals of the sensor performance interface (SPI).

Table 45 — Sensor performance interface

LSG	RL LSG M/C/O	Signal	RL Signal M/C/O	Option
Header information	M	Version ID {major, minor, patch} (A.1.1)	M	
		Sensor ID (A.1.2)	M	
		Interface ID (A.1.3)	O	
		Time stamp – predicted (A.1.4.1)	M	
		Message counter (A.1.5.2)	O	
		Interface cycle time (A.1.6)	O	
		Interface cycle time – variation (A.1.7)	O	
		Data qualifier (A.1.8)	M	
		Scope of interface (A.1.19)	O	
Header vehicle coordinate system	M Need of logical signal group (B.3.3) 1. SHII Header information, 2. Redundant on OLI, FLI and DLI Header information	Vehicle coordinate system type (A.1.20)	M	Optimize Implicit values (B.1.4)
Header sensor mounting information	M Need of logical signal group (B.3.3) 1. SHII Header information, 2. DLI Header information	Sensor origin position {x, y, z} (A.1.21)	M	
		Sensor origin position – error {x, y, z} (A.1.22)	O	Implementation (B.4.1 – Error model)
		Sensor orientation {yaw, pitch, roll} (A.1.23)	M	
		Sensor orientation – error {yaw, pitch, roll} (A.1.24)	O	Implementation (B.4.1 – Error model)
	O	Vanishing point {azimuth, elevation} (A.1.25)	M	

© ISO 2020 – All rights reserved

Copyright International Organization for Standardization
Provided by IHS Markit under license with ANSI
No reproduction or networking permitted without license from IHS
Order Number: W2233726
Sold to:APTIV [222021100001] - RUTH.M.MONTANO@APTIV.COM,
Not for Resale,2020-08-07 18:02:38 UTC

Header sensor environmental information		Vanishing point – error {azimuth, elevation} (A.1.26)	O	
Segments	M	Number of valid field of view segments (A.1.11.10)	M	Optimize (B.1.1 – List length optimization) Alternative Unrolling tuple-lists (B.1.5 – Key: Horizontal angle {begin, end} (A.5.1) and Vertical angle {begin, end} (A.5.2))
		Size type: Dynamic/fixed Size #: Number of valid field of view segments (A.1.11.10)		
Status	M	Horizontal angle {begin, end} (A.5.1)	M	Alternative: (B.1.3)
		Vertical angle {begin, end} (A.5.2)	M	Alternative: (B.1.3)
		Resolution {horizontal, vertical} (A.5.3)	O	
		Beam divergence {horizontal, vertical} (A.5.4)	O	
		Range gain (A.5.5)	O	
		Blockage status (A.5.6)	M	
Field of view reduction	M	Number of valid field of view reduction reasons (A.5.7)	M	Optimize (B.1.1 – List length optimization) Alternative Unrolling tuple-lists (B.1.5 – Key: Field of view reduction reason type (A.5.8))
		Size type: Dynamic/fixed Size #: Number of valid field of view reduction reasons (A.5.7)		
		Field of view reduction reason type (A.5.8)	M	Alternative: (B.1.3)
		Field of view reduction reason probability (A.5.9)	M	

© ISO 2020 – All rights reserved

Copyright International Organization for Standardization
Provided by IHS Markit under license with ANSI
No reproduction or networking permitted without license from IHS

Order Number: W2233726
Sold to:APTIV [222021100001] - RUTH.M.MONTANO@APTIV.COM,
Not for Resale,2020-08-07 18:02:38 UTC

Real-world object detection rates	C (B.3.1 – Exist: OLI and in scope of Scope of interface (A.1.19))	Number of valid object detection classifications (A.5.10)	M	Optimize (B.1.1 – List length optimization) Alternative Unrolling tuple-lists (B.1.5 – Key: Recognized object type (A.5.11))
		Size type: Dynamic/fixed Size #: Number of valid object detection classifications (A.5.10)		
		Recognized object type (A.5.11)	M	Alternative: (B.1.3)
		Detection range {min, max} (A.5.12)	M	
		Minimum classification rate (A.5.13)	O	
		Maximum false positive rate (A.5.14)	O	
		Positive predictive value (A.5.15)	O	
Reference target detection rates	C (B.3.1 – Exist: FLI, DLI and in scope of Scope of interface (A.1.19))	Number of valid reference detection classifications (A.5.16)	M	Optimize (B.1.1 – List length optimization)
		Size type: Dynamic/fixed Size #: Number of valid reference detection classifications (A.5.16)		
		Radar cross section reference target (A.5.17)	C (B.2.1 – Relevant: radar)	
		Reflectivity reference target (A.5.18)	C (B.2.1 – Relevant: lidar, ultrasonic)	
		Delta E colour difference (A.5.19)	C (B.2.1 – Relevant: camera)	
		Relative speed range {min, max} (A.5.20)	C (B.2.1 – Relevant: radar)	
		Detection range {min, max} (A.5.12)	M	
		Signal to noise ratio – supportive level (A.5.21)	M	

© ISO 2020 – All rights reserved

Copyright International Organization for Standardization
Provided by IHS Markit under license with ANSI
No reproduction or networking permitted without license from IHS

Order Number: W2233726
Sold to:APTIV [222021100001] - RUTH.M.MONTANO@APTIV.COM,
Not for Resale,2020-08-07 18:02:38 UTC

The signals referring to angles resp. distances in the segments always refer to the sensor coordinate system and its origin. This affects:

— Horizontal angle {begin, end} (A.5.1)

— Vertical angle {begin, end} (A.5.2)

— Detection range {min, max} (A.5.12)

— Relative speed range {min, max} (A.5.20)

The correlation between vehicle- and sensor coordinate system is determined by the mounting position of the sensor (LSG: Header sensor mounting information (see Table 45)).

10.2.1 Sensor performance header

Table 46 defines the LSG Sensor performance header (10.2.1) and the changes due to the customization in comparison to the LSG Generic supportive sensor header (10.1.1). The Sensor performance header (10.2.1) contains a list of valid segment entities.

© ISO 2020 – All rights reserved

Copyright International Organization for Standardization
Provided by IHS Markit under license with ANSI
No reproduction or networking permitted without license from IHS

Order Number: W2233726
Sold to:APTIV [222021100001] - RUTH.M.MONTANO@APTIV.COM,
Not for Resale,2020-08-07 18:02:38 UTC

Table 46 — Logical signal group: Sensor performance header

Signal	RL signal		Option
Version ID {major, minor, patch} (A.1.1)	Mandatory		
Sensor ID (A.1.2)	Mandatory		
Interface ID (A.1.3)	Optional		
Time stamp – predicted (A.1.4.1)	Mandatory		
Message counter (A.1.5.2)	Optional		
Interface cycle time (A.1.6)	Optional		
Interface cycle time – variation (A.1.7)	Optional		
Data qualifier (A.1.8)	Mandatory		
Scope of interface (A.1.19)	Optional		
Vehicle coordinate system type (A.1.20)	RL LSG Mandatory Need of logical signal group (B.3.3) 1. SHII Header information, 2. Redundant on OLI, FLI and DLI Header information	Mandatory	Optimize Implicit values (B.1.4)
Sensor origin position {x, y, z} (A.1.21)	RL LSG Mandatory Need of logical signal group (B.3.3) 1. SHII Header information, 2. DLI Header information	Mandatory	
Sensor origin position – error {x, y, z} (A.1.22)		Optional	
Sensor orientation {yaw, pitch, roll} (A.1.23)		Mandatory	
Sensor orientation – error {yaw, pitch, roll} (A.1.24)		Optional	
Vanishing point {azimuth, elevation} (A.1.25)	Mandatory		
Vanishing point – error {azimuth, elevation} (A.1.26)	Optoional		
Number of valid field of view segments (A.1.11.10)	Mandatory		Optimize (B.1.1 – List length optimization) Alternative Unrolling tuple-lists (B.1.5 – Key: Horizontal angle {begin, end} (A.5.1) and Vertical angle {begin, end} (A.5.2))

© ISO 2020 – All rights reserved

Copyright International Organization for Standardization
Provided by IHS Markit under license with ANSI
No reproduction or networking permitted without license from IHS

Order Number: W2233726
Sold to:APTIV [222021100001] - RUTH.M.MONTANO@APTIV.COM,
Not for Resale,2020-08-07 18:02:38 UTC

10.2.2 Sensor performance entity

Each sensor performance segment of a sensor describes a measured detection and consists of several LSGs.

— **Status:** The status describes the geometry of the FOV segment.

— **Field of view reduction causes:** The FOV reduction causes describes the causes (e.g. extrinsic or intrinsic) for a FOV reduction.

— **Real-world object detection rates:** The real-world object detection rates describes the estimated detection rates for real-world detections of different real-world objects.

— **Reference target detection rates:** The reference target detection rates describe the estimated detection rates for synthetic, well-defined detections of different synthetic, well-defined objects.

For two valid but overlapping FOV segments the values for the earlier defined segment will always stay valid. So typically, the segments will be defined from the inside to the outside (due to timing reasons, special regions of interest are more important than the general FOV segments and the special regions of interest need to be known to be subtracted from the general FOV segment).

10.3 Sensor health information interface

The Sensor health information interface (10.3) (SHII) provides a qualitive statement of the sensor's health status. More detailed information of a sensor status can be transmitted via other interfaces.

Table 47 provides an overview of the logical signals of the sensor health information interface.

Table 47 — Sensor health information interface

LSG	RL LSG M/C/O	Signal	RL Signal M/C/O	Option
Header information	M	Version ID {major, minor, patch} (A.1.1)	M	
		Sensor ID (A.1.2)	M	
		Interface ID (A.1.3)	O	
		Time stamp – predicted (A.1.4.1)	M	
		Message counter (A.1.5.2)	O	
		Interface cycle time (A.1.6)	O	
		Interface cycle time – variation (A.1.7)	O	
		Data qualifier (A.1.8)	M	
Status	M	Sensor operation state (A.5.22)	M	
		Sensor operation mode (A.5.23)	M	
		Sensor defect detected (A.5.24)	M	
		Sensor defect reason (A.5.25)	M	
		Sensor diagnostic mode (A.5.26)	M	

© ISO 2020 – All rights reserved

Copyright International Organization for Standardization
Provided by IHS Markit under license with ANSI
No reproduction or networking permitted without license from IHS
Order Number: W2233726
Sold to:APTIV [222021100001] - RUTH.M.MONTANO@APTIV.COM,
Not for Resale,2020-08-07 18:02:38 UTC

		Status supply voltage (A.5.27)	M	
		Sensor temperature status (A.5.28)	M	
		Number of valid sensor input signal statuses (A.5.29)	M	Optimize (B.1.1 – List length optimization) Alternative Unrolling tuple-lists (B.1.5 – Key: Sensor input signal – type (A.5.30))
		Size type: Dynamic/fixed Size #: Number of valid sensor input signal statuses (A.5.29)		
		Sensor input signal – type (A.5.30)	M	Alternative: (B.1.3)
		Sensor input signal – status (A.5.31)	M	
		Sensor external disturbed (A.5.32)	O	
		Sensor transmit power reduced (A.5.33)	O	
		Status sensor heating (A.5.34)	O	
		Status sensor cleaning (A.5.35)	O	
		Sensor time sync (A.5.36)	O	
		Sensor time sync offset value (A.5.37)	C (B.2.2 – Signal: Sensor time sync (A.5.36) has enumerator "SensorTimeSync_Offset")	
Calibration	O Need of logical signal group (B.3.3) 1. SPI Header information, 2. DLI Header information, 3. FLI Header information,	Number of valid sensor calibratable components (A.5.38)	M	Optimize (B.1.1 – List length optimization) Alternative Unrolling tuple-lists (B.1.5 – Key: Sensor calibratable component (A.5.39))
		Size type: Dynamic/fixed Size #: Number of valid sensor calibratable components (A.5.38)		
		Sensor calibratable component (A.5.39)	M	Alternative: (B.1.3)

Copyright International Organization for Standardization
Provided by IHS Markit under license with ANSI
No reproduction or networking permitted without license from IHS
Order Number: W2233726
Sold to:APTIV [222021100001] - RUTH.M.MONTANO@APTIV.COM,
Not for Resale,2020-08-07 18:02:38 UTC

	4. redundant on OLI Header information	Sensor calibration status (A.5.40)	M	
		Correction origin position {x, y, z} (A.5.41)	O	
		Correction origin position – error {x, y, z} (A.5.42)	O	Implementation (B.4.1 – Error model)
		Correction position – limit minimum {x, y, z} (A.5.43)	O	
		Correction position – limit maximum {x, y, z} (A.5.44)	O	
		Correction orientation {yaw, pitch, roll} (A.5.45)	O	
		Correction orientation – error {yaw, pitch, roll} (A.5.46)	O	Implementation (B.4.1 – Error model)
		Correction angle – limit minimum {yaw, pitch, roll} (A.5.47)	O	
		Correction angle – limit maximum {yaw, pitch, roll} (A.5.48)	O	

10.3.1 Sensor health information header

Table 48 defines the LSG Sensor health information header (10.3.1) and the changes due to the customization in comparison to the LSG Generic supportive sensor header (10.1.1).

Table 48 — Logical signal group: Sensor health information header

Signal	RL signal	Option
Version ID {major, minor, patch} (A.1.1)	Mandatory	
Sensor ID (A.1.2)	Mandatory	
Interface ID (A.1.3)	Optional	
Time stamp – predicted (A.1.4.1)	Mandatory	
Message counter (A.1.5.2)	Optional	
Interface cycle time (A.1.6)	Optional	
Interface cycle time – variation (A.1.7)	Optional	
Data qualifier (A.1.8)	Mandatory	

There is only one global entity for SHII. Therefore, the sensor provides no list of SHII entities and signal Number of valid <…> (A.1.11) is not provided.

© ISO 2020 – All rights reserved

Copyright International Organization for Standardization
Provided by IHS Markit under license with ANSI
No reproduction or networking permitted without license from IHS

Order Number: W2233726
Sold to:APTIV [222021100001] - RUTH.M.MONTANO@APTIV.COM,
Not for Resale,2020-08-07 18:02:38 UTC

10.3.2 Sensor health information entity

Sensor health information of a sensor describes global sensor statuses and consists of several LSGs. This interface provides only one Sensor health information entity for the entire sensor and not a list of entities.

— **Status:** The status describes the global statuses of the sensor.

— **Calibration:** The status describes the statuses and information of the sensor calibration.

Copyright International Organization for Standardization
Provided by IHS Markit under license with ANSI
No reproduction or networking permitted without license from IHS
Order Number: W2233726
Sold to:APTIV [222021100001] - RUTH.M.MONTANO@APTIV.COM,
Not for Resale,2020-08-07 18:02:38 UTC

Annex A
(normative)

Interface signals

A.1 Header signals

In this clause interface header specific signals are defined. If different definitions are required for different interfaces, the interface-specific signal is defined in a subclause, e.g. Time stamp – <…> (A.1.4) and Time stamp – predicted (A.1.4.1).

A.1.1 Version ID {major, minor, patch}

Table A.1 — Signal: Version ID {major, minor, patch}

Name	Version ID {major, minor, patch}		
Description	Version information of the interface. Requirement: Version ID {major, minor, patch} (A.1.1) is assigned in the system design phase.		
Value type	3D value	**Unit**	(1, 1, 1)

A.1.2 Sensor ID

Table A.2 — Signal: Sensor ID

Name	Sensor ID		
Description	Unique Sensor ID (A.1.2) to uniquely identify the sensor and link the data of different sensor's interfaces. Additional information: Required to associate the logical interfaces of one sensor. This is necessary e.g. for a service-oriented architecture. Requirement: Sensor ID (A.1.2) is assigned during the system design phase.		
Value type	integer value	**Unit**	1

© ISO 2020 – All rights reserved

Copyright International Organization for Standardization
Provided by IHS Markit under license with ANSI
No reproduction or networking permitted without license from IHS
Order Number: W2233726
Sold to:APTIV [222021100001] - RUTH.M.MONTANO@APTIV.COM,
Not for Resale,2020-08-07 18:02:38 UTC

A.1.3 Interface ID

Table A.3 — Signal: Interface ID

Name	Interface ID		
Description	The Interface ID (A.1.3) is used to uniquely identify the sensor's sender interface of the message. Additional information: The enumerators may differentiate the sensor's sensor technology.		
Value type	enumeration	**Unit**	1

Table A.4 — Enumeration: Interface ID – Example enumerators

Name	Description	RL enumerator
InterfaceID_PotentiallyMovingObjects	The message was sent by PMOI.	"exemplary"
InterfaceID_RoadObjects	The message was sent by RDOI.	"exemplary"
InterfaceID_StaticObjects	The message was sent by SOI.	"exemplary"
InterfaceID_CameraFeatures	The message was sent by the sensor specific FLI. The sensor is a camera sensor.	"exemplary"
InterfaceID_UltrasonicFeatures	The message was sent by the sensor specific FLI. The sensor is an ultrasonic sensor.	"exemplary"
InterfaceID_RadarDetections	The message was sent by the sensor specific DLI. The sensor is a radar sensor.	"exemplary"
InterfaceID_LidarDetections	The message was sent by the sensor specific DLI. The sensor is a lidar sensor.	"exemplary"
InterfaceID_CameraDetections	The message was sent by the sensor specific DLI. The sensor is a camera sensor.	"exemplary"
InterfaceID_UltrasonicDetections	The message was sent by the sensor specific DLI. The sensor is an ultrasonic sensor.	"exemplary"
InterfaceID_SensorPerformance	The message was sent by SPI	"exemplary"
InterfaceID_SensorHealthInformation	The message was sent by SHII	"exemplary"

A.1.4 Time stamp – <...>

Time stamp is defined depending on the level of the interface. It is either the exact time of the measurement or the predicted time at which the message is consistent. An additional time stamp

© ISO 2020 – All rights reserved

Copyright International Organization for Standardization
Provided by IHS Markit under license with ANSI
No reproduction or networking permitted without license from IHS
Order Number: W2233726
Sold to:APTIV [222021100001] - RUTH.M.MONTANO@APTIV.COM,
Not for Resale,2020-08-07 18:02:38 UTC

difference specifies an individual measurement point with a time offset of each entity relative to the time stamp of the message.

A.1.4.1 Time stamp – predicted

Table A.5 — Signal: Time stamp – predicted

Name	Time stamp – predicted		
Description	Time stamp at which the entities of the interface are consistent (not the time at which it was processed or at which it is transmitted) in the vehicle-global synchronized time. Clock synchronization shall be ensured, depending on bus technology. Additional information: The time stamp that was used for the prediction. I.e. the time stamp can be the same as or differ from the base time stamp(s) of the e.g. underlying detection's or feature's entity list(s). Time stamps are consistent for all vehicle ECUs.		
Value type	real value	**Unit**	s

A.1.4.2 Time stamp – measurement

Table A.6 — Signal: Time stamp – measurement

Name	Time stamp – measurement		
Description	Time stamp at which the measurement was taken (not the time at which it was processed or at which it is transmitted) in the vehicle-global synchronized time. Clock synchronization shall be ensured, depending on bus technology. Additional information: Start time of measurement shall be used (start of measurement). Each entity of a detection list may have e.g. Time stamp difference – detection level (A.4.4) for its measurement (e.g. for integrating sensor technologies). Time stamps are consistent for all vehicle ECUs.		
Value type	real value	**Unit**	s

A.1.5 <...> counter

A continuous value that defines the order of a logical interface's messages. The logical interface messages can be sent cyclically or non-cyclically, i.e. e.g. event triggered.

© ISO 2020 – All rights reserved

Copyright International Organization for Standardization
Provided by IHS Markit under license with ANSI
No reproduction or networking permitted without license from IHS
Order Number: W2233726
Sold to:APTIV [222021100001] - RUTH.M.MONTANO@APTIV.COM,
Not for Resale,2020-08-07 18:02:38 UTC

A.1.5.1 Cycle counter

Table A.7 — Signal: Cycle counter

Name	Cycle counter		
Description	Continuous up counter to identify the message cycle of the interface. It counts up per "every cycle of a complete prediction/single measurement". Additional information: Information can be determined from time stamp and the sensor's cycle period. Each sensor uses a local sensor cycle counter per interface.		
Value type	[0…] integer value	**Unit**	1

A.1.5.2 Message counter

Table A.8 — Signal: Message counter

Name	Message counter		
Description	Continuous up counter to identify the message sequence of the interface. It counts up per every sent message. Additional information: Interfaces with a Message counter (A.1.5.2) may send messages acyclic, i.e. e.g. event triggered. Each sensor uses a local sensor message counter per interface.		
Value type	[0…] integer value	**Unit**	1

A.1.6 Interface cycle time

Table A.9 — Signal: Interface cycle time

Name	Interface cycle time		
Description	The representative cycle time of the interface's messages. Normally, each interface sends the complete interface message cyclically. The period between two messages can vary. Each interface header defines the interface's cycle time and the variation of the cycle time. Additional information: If Interface cycle time – variation (A.1.7) is 100 % the message is sent event triggered.		
Value type	[0…] real value	**Unit**	1

© ISO 2020 – All rights reserved

Copyright International Organization for Standardization
Provided by IHS Markit under license with ANSI
No reproduction or networking permitted without license from IHS

Order Number: W2233726
Sold to:APTIV [222021100001] - RUTH.M.MONTANO@APTIV.COM,
Not for Resale,2020-08-07 18:02:38 UTC

A.1.7 Interface cycle time – variation

Table A.10 — Signal: Interface cycle time – variation

Name	Interface cycle time – variation		
Description	The possible variation of the expected representative cycle time of the interface's messages. Additional information: If Interface cycle time – variation (A.1.7) is 100 % the message is sent event triggered i.e. for the n.th cycle: 0 s <= n.th cycle time <= infinity s. Example: The duration between two sequentially sent messages of an interface is in the range [Interface cycle time * (1 - Interface cycle time variation / 100 %), Interface cycle time / (1 - Interface cycle time variation/100 %)].		
Value type	[0…] real value	**Unit**	%

A.1.8 Data qualifier

Table A.11 — Signal: Data qualifier

Name	Data qualifier		
Description	Data qualifier (A.1.8) expresses whether the content of the entity list(s) of the interface can be used or not. It can change dynamically over time and inform about temporal restrictions.		
Value type	enumeration	**Unit**	1

Table A.12 — Enumeration: Data qualifier – Example enumerators

Name	Description	RL enumerator
DataQualifier_Normal	Entities/information of the interface can be used without restrictions.	"exemplary"
DataQualifier_NotAvailable	Entities/information of the interface are not available.	"exemplary"
DataQualifier_ReduceInCoverage	Entities are not complete due to a restricted coverage (e.g. restricted view).	"exemplary"
DataQualifier_ReduceInPerformance	Entities are not complete due to a restricted performance.	"exemplary"
DataQualifier_ReduceInCoverageAndPerformance	Entities are not complete due to a restricted coverage and restricted performance.	"exemplary"
DataQualifier_TestMode	Sensor is running in test mode and outputs differ from normal operation mode	"exemplary"
DataQualifier_Invalid	Measurement cycle was invalid, no predicted or measured object will be transferred.	"exemplary"

© ISO 2020 – All rights reserved

Copyright International Organization for Standardization
Provided by IHS Markit under license with ANSI
No reproduction or networking permitted without license from IHS

Order Number: W2233726
Sold to:APTIV [222021100001] - RUTH.M.MONTANO@APTIV.COM,
Not for Resale,2020-08-07 18:02:38 UTC

A.1.9 Recognized <...> – capability

The performance of the sensor determines how many entities the sensor can recognize under e.g. full load. Example: A value of 0 informs that the sensor may not recognize any object/feature/detection at the moment.

A.1.9.1 Recognized potentially moving objects – capability

Table A.13 — Signal: Recognized potentially moving objects – capability

Name	Recognized potentially moving objects – capability		
Description	The performance of the sensor determines how many entities guaranteed the sensor can recognize under full load.		
Value type	[0…] integer value	**Unit**	1

A.1.9.2 Recognized road markings – capability

Table A.14 — Signal: Recognized road markings – capability

Name	Recognized road markings – capability		
Description	The performance of the sensor determines how many entities guaranteed the sensor can recognize under full load.		
Value type	[0…] integer value	**Unit**	1

A.1.9.3 Recognized road boundaries – capability

Table A.15 — Signal: Recognized road boundaries – capability

Name	Recognized road boundaries – capability		
Description	The performance of the sensor determines how many entities guaranteed the sensor can recognize under full load.		
Value type	[0…] integer value	**Unit**	1

A.1.9.4 Recognized general landmarks – capability

Table A.16 — Signal: Recognized general landmarks – capability

Name	Recognized general landmarks – capability		
Description	The performance of the sensor determines how many entities guaranteed the sensor can recognize under full load.		
Value type	[0…] integer value	**Unit**	1

© ISO 2020 – All rights reserved

Copyright International Organization for Standardization
Provided by IHS Markit under license with ANSI
No reproduction or networking permitted without license from IHS
Order Number: W2233726
Sold to:APTIV [222021100001] - RUTH.M.MONTANO@APTIV.COM,
Not for Resale,2020-08-07 18:02:38 UTC

A.1.9.5 Recognized traffic signs – capability

Table A.17 — Signal: Recognized traffic signs – capability

Name	Recognized traffic signs – capability		
Description	The performance of the sensor determines how many entities guaranteed the sensor can recognize under full load.		
Value type	[0…] integer value	**Unit**	1

A.1.9.6 Recognized traffic lights – capability

Table A.18 — Signal: Recognized traffic lights – capability

Name	Recognized traffic lights – capability		
Description	The performance of the sensor determines how many entities guaranteed the sensor can recognize under full load.		
Value type	[0…] integer value	**Unit**	1

A.1.9.7 Recognized features – capability

Table A.19 — Signal: Recognized features – capability

Name	Recognized features – capability		
Description	The performance of the sensor determines how many entities guaranteed the sensor can recognize under full load.		
Value type	[0…] integer value	**Unit**	1

A.1.9.8 Recognized detections – capability

Table A.20 — Signal: Recognized detections – capability

Name	Recognized detections – capability		
Description	The performance of the sensor determines how many entities guaranteed the sensor can recognize under full load.		
Value type	[0…] integer value	**Unit**	1

A.1.9.9 Recognized shapes – capability

Table A.21 — Signal: Recognized shapes – capability

Name	Recognized shapes – capability		
Description	The performance of the sensor determines how many entities guaranteed the sensor can recognize under full load.		
Value type	[0…] integer value	**Unit**	1

© ISO 2020 – All rights reserved

Copyright International Organization for Standardization
Provided by IHS Markit under license with ANSI
No reproduction or networking permitted without license from IHS

Order Number: W2233726
Sold to:APTIV [222021100001] - RUTH.M.MONTANO@APTIV.COM,
Not for Resale,2020-08-07 18:02:38 UTC

A.1.10 Recognized <...> – status

The performance of the sensor determines a state of the recognition process under e.g. full load.

All entities use the same list of example enumerators.

Table A.22 — Enumeration: Recognized <...> – status – Example enumerators

Name	Description	RL enumerator
Recognized<...>Status_Normal	The performance of the sensor is enough to process all recognized entities.	"exemplary"
Recognized<...>Status_PreLimits	The performance of the sensor is close to the limits to process all recognized entities.	"exemplary"
Recognized<...>Status_Limits	The performance of the sensor is not enough to process all recognized entities.	"exemplary"

A.1.10.1 Recognized potentially moving objects – status

Table A.23 — Signal: Recognized potentially moving objects – status

Name	Recognized potentially moving objects – status		
Description	The sensor determines whether the sensor can process all recognized entities or whether it works at the sensor's performance limits.		
Value type	enumeration	**Unit**	1

A.1.10.2 Recognized road markings – status

Table A.24 — Signal: Recognized road markings – status

Name	Recognized road markings – status		
Description	The sensor determines whether the sensor can process all recognized entities or whether it works at the sensor's performance limits.		
Value type	enumeration	**Unit**	1

A.1.10.3 Recognized road boundaries – status

Table A.25 — Signal: Recognized road boundaries – status

Name	Recognized road boundaries – status		
Description	The sensor determines whether the sensor can process all recognized entities or whether it works at the sensor's performance limits.		
Value type	enumeration	**Unit**	1

© ISO 2020 – All rights reserved

Copyright International Organization for Standardization
Provided by IHS Markit under license with ANSI
No reproduction or networking permitted without license from IHS
Order Number: W2233726
Sold to:APTIV [222021100001] - RUTH.M.MONTANO@APTIV.COM,
Not for Resale,2020-08-07 18:02:38 UTC

A.1.10.4 Recognized general landmarks – status

Table A.26 — Signal: Recognized general landmarks – status

Name	Recognized general landmarks – status		
Description	The sensor determines whether the sensor can process all recognized entities or whether it works at the sensor's performance limits.		
Value type	enumeration	**Unit**	1

A.1.10.5 Recognized traffic signs – status

Table A.27 — Signal: Recognized traffic signs – status

Name	Recognized traffic signs – status		
Description	The sensor determines whether the sensor can process all recognized entities or whether it works at the sensor's performance limits.		
Value type	enumeration	**Unit**	1

A.1.10.6 Recognized traffic lights – status

Table A.28 — Signal: Recognized traffic lights – status

Name	Recognized traffic lights – status		
Description	The sensor determines whether the sensor can process all recognized entities or whether it works at the sensor's performance limits.		
Value type	enumeration	**Unit**	1

A.1.10.7 Recognized features – status

Table A.29 — Signal: Recognized features – status

Name	Recognized features – status		
Description	The sensor determines whether the sensor can process all recognized entities or whether it works at the sensor's performance limits.		
Value type	enumeration	**Unit**	1

A.1.10.8 Recognized detections – status

Table A.30 — Signal: Recognized detections – status

Name	Recognized detections – status		
Description	The sensor determines whether the sensor can process all recognized entities or whether it works at the sensor's performance limits.		
Value type	enumeration	**Unit**	1

© ISO 2020 – All rights reserved

Copyright International Organization for Standardization
Provided by IHS Markit under license with ANSI
No reproduction or networking permitted without license from IHS

Order Number: W2233726
Sold to:APTIV [222021100001] - RUTH.M.MONTANO@APTIV.COM,
Not for Resale,2020-08-07 18:02:38 UTC

A.1.10.9 Recognized shapes – status

Table A.31 — Signal: Recognized shapes – status

Name	Recognized shapes – status		
Description	The sensor determines whether the sensor can process all recognized entities or whether it works at the sensor's performance limits.		
Value type	enumeration	**Unit**	1

A.1.11 Number of valid <…>

Each interface (except SHII) send one or more lists of entities. For each list, the number of valid transferred entities is known.

A.1.11.1 Number of valid potentially moving objects

Table A.32 — Signal: Number of valid potentially moving objects

Name	Number of valid potentially moving objects		
Description	The current Number of valid potentially moving objects (A.1.11.1) in the potentially moving object list of the PMOI. Additional information: Maximum number of entries could be limited. The entries in the list may or may not be sorted. All those elements of the list which can be used by the fusion unit are regarded as valid. The list includes a complete resp. prioritised set of valid entities for this Time stamp – <…> (A.1.4) and not only a differential list.		
Value type	[0…] integer value	**Unit**	1

A.1.11.2 Number of valid road markings

Table A.33 — Signal: Number of valid road markings

Name	Number of valid road markings		
Description	The current Number of valid road markings (A.1.11.2) in the road marking list of the RDOI. Additional information: Maximum number of entries could be limited. The entries in the list may or may not be sorted. All those elements of the list which can be used by the fusion unit are regarded as valid. The list includes a complete resp. prioritised set of valid entities for this Time stamp – <…> (A.1.4) and not only a differential list. Each road marking has polynomial or poly line, e.g. containing >=2 vertices.		
Value type	[0…] integer value	**Unit**	1

Copyright International Organization for Standardization
Provided by IHS Markit under license with ANSI
No reproduction or networking permitted without license from IHS
Order Number: W2233726
Sold to:APTIV [222021100001] - RUTH.M.MONTANO@APTIV.COM,
Not for Resale,2020-08-07 18:02:38 UTC

A.1.11.3 Number of valid road boundaries

Table A.34 — Signal: Number of valid road boundaries

Name	Number of valid road boundaries		
Description	The current Number of valid road boundaries (A.1.11.3) in the road boundary list of the RDOI. Additional information: Maximum number of entries could be limited. The entries in the list may or may not be sorted. All those elements of the list which can be used by the fusion unit are regarded as valid. The list includes a complete resp. prioritised set of valid entities for this Time stamp – <…> (A.1.4) and not only a differential list. Each road boundary has polynomial or poly line, e.g. containing >=2 vertices.		
Value type	[0…] integer value	**Unit**	1

A.1.11.4 Number of valid general landmarks

Table A.35 — Signal: Number of valid general landmarks

Name	Number of valid general landmarks		
Description	The current Number of valid general landmarks (A.1.11.4) in the general landmark list of the SOI. Additional information: Maximum number of entries could be limited. The entries in the list may or may not be sorted. All those elements of the list which can be used by the fusion unit are regarded as valid. The list includes a complete resp. prioritised set of valid entities for this Time stamp – <…> (A.1.4) and not only a differential list.		
Value type	[0…] integer value	**Unit**	1

© ISO 2020 – All rights reserved

Copyright International Organization for Standardization
Provided by IHS Markit under license with ANSI
No reproduction or networking permitted without license from IHS

Order Number: W2233726
Sold to:APTIV [222021100001] - RUTH.M.MONTANO@APTIV.COM,
Not for Resale,2020-08-07 18:02:38 UTC

A.1.11.5 Number of valid traffic signs

Table A.36 — Signal: Number of valid traffic signs

Name	Number of valid traffic signs		
Description	The current Number of valid traffic signs (A.1.11.5) in the traffic sign list of the SOI. Additional information: Maximum number of entries could be limited. The entries in the list may or may not be sorted. All those elements of the list which can be used by the fusion unit are regarded as valid. The list includes a complete resp. prioritised set of valid entities for this Time stamp – <…> (A.1.4) and not only a differential list.		
Value type	[0…] integer value	**Unit**	1

A.1.11.6 Number of valid traffic lights

Table A.37 — Signal: Number of valid traffic lights

Name	Number of valid traffic lights		
Description	The current Number of valid traffic lights (A.1.11.6) in the traffic light list of the SOI. Additional information: Maximum number of entries could be limited. The entries in the list may or may not be sorted. All those elements of the list which can be used by the fusion unit are regarded as valid. The list includes a complete resp. prioritised set of valid entities for this Time stamp – <…> (A.1.4) and not only a differential list.		
Value type	[0…] integer value	**Unit**	1

© ISO 2020 – All rights reserved

Copyright International Organization for Standardization
Provided by IHS Markit under license with ANSI
No reproduction or networking permitted without license from IHS

Order Number: W2233726
Sold to:APTIV [222021100001] - RUTH.M.MONTANO@APTIV.COM,
Not for Resale,2020-08-07 18:02:38 UTC

A.1.11.7 Number of valid features

Table A.38 — Signal: Number of valid features

Name	Number of valid features		
Description	The current Number of valid features (A.1.11.7) in the feature list of a FLI. One measurement can generate not only unique features, if there are e.g. ambiguities in camera shape or colour classification. Additional information: Maximum number of entries could be limited. The entries in the list may or may not be sorted. All those elements of the list which can be used by the fusion unit are regarded as valid. The list includes a complete resp. prioritised set of valid entities for this Time stamp – <…> (A.1.4) and not only a differential list.		
Value type	[0…] integer value	**Unit**	1

A.1.11.8 Number of valid detections

Table A.39 — Signal: Number of valid detections

Name	Number of valid detections		
Description	The current Number of valid detections (A.1.11.8) in the detection list of a DLI. One measurement can generate more than one similar detection, if there are ambiguities. Additional information: Maximum number of entries could be limited. The entries in the list may or may not be sorted. All those elements of the list which can be used by the fusion unit are regarded as valid. The list includes a complete resp. prioritised set of valid entities for this Time stamp – <…> (A.1.4) and not only a differential list. In case of an entity list (with implicit fixed size) which represents one possible entity per e.g. each sensor measure point, this number of detections specify the Number of valid detections (A.1.11.8) and not the size of the entity list.		
Value type	[0…] integer value	**Unit**	1

© ISO 2020 – All rights reserved

Copyright International Organization for Standardization
Provided by IHS Markit under license with ANSI
No reproduction or networking permitted without license from IHS

Order Number: W2233726
Sold to:APTIV [222021100001] - RUTH.M.MONTANO@APTIV.COM,
Not for Resale,2020-08-07 18:02:38 UTC

A.1.11.9 Number of valid shapes

Table A.40 — Signal: Number of valid shapes

Name	Number of valid shapes		
Description	The current Number of valid shapes (A.1.11.9) in the feature list of the CFI. Additional information: Maximum number of entries could be limited. The entries in the list may or may not be sorted. All those elements of the list which can be used by the fusion unit are regarded as valid. The list includes a complete resp. prioritised set of valid entities for this Time stamp – <…> (A.1.4) and not only a differential list.		
Value type	[0…] integer value	**Unit**	1

A.1.11.10 Number of valid field of view segments

Table A.41 — Signal: Number of valid field of view segments

Name	Number of valid field of view segments		
Description	The current Number of valid field of view segments (A.1.11.10) of the sensor of the SPI. Additional information: Maximum number of entries could be limited. The entries in the list may or may not be sorted. All those elements of the list which can be used by the fusion unit are regarded as valid. The list includes a complete resp. prioritised set of valid entities for this Time stamp – <…> (A.1.4) and not only a differential list.		
Value type	[0…] integer value	**Unit**	1

A.1.12 Tracking motion model

Table A.42 — Signal: Tracking motion model

Name	Tracking motion model		
Description	Object tracking uses a motion model for tracking moving items.		
Value type	enumeration	**Unit**	1

Copyright International Organization for Standardization
Provided by IHS Markit under license with ANSI
No reproduction or networking permitted without license from IHS
Order Number: W2233726
Sold to:APTIV [222021100001] - RUTH.M.MONTANO@APTIV.COM,
Not for Resale,2020-08-07 18:02:38 UTC

Table A.43 Enumeration: Tracking motion model – Example enumerators

Name	Description	RL enumerator
TrackingMotionModel_ConstantVelocity	Motion model uses constant velocity	“exemplary”
TrackingMotionModel_ConstantAcceleration	Motion model uses constant acceleration	“exemplary”
TrackingMotionModel_ConstantTurnRate	Motion model uses constant turn rate	“exemplary”

A.1.13 Motion type

Table A.44 — Signal: Motion type

Name	Motion type		
Description	Definition of the applied Motion type (A.1.13) of the interface’s motion signals.		
Value type	enumeration	**Unit**	1

Table A.45 Enumeration: Motion type – Example enumerators

Name	Description	RL enumerator
MotionType_Relative	The interface sends relative motion values of the object described in ego-vehicle axis system {x, y, z}.	“exemplary”
MotionType_Absolute	The interface sends absolute motion values of the object in world coordinate system described in ego-vehicle axis system {x, y, z}.	“exemplary”

A.1.14 Colour model type

Table A.46 — Signal: Colour model type

Name	Colour model type		
Description	Definition of the applied colour model for the interface. Additional information: Colour model type (A.1.14) defines also the number of Colour values (A.2.63, A.3.10, A.4.29).		
Value type	enumeration	**Unit**	1

Table A.47 Enumeration: Colour model type – Example enumerators

Name	Description	RL enumerator
ColourModelType_Grey	Grey scale – 1 colour value	“exemplary”
ColourModelType_RGB	Red, green, blue – 3 colour values	“exemplary”
ColourModelType_HSV	Hue, saturation, value – 3 colour values	“exemplary”

© ISO 2020 – All rights reserved

Copyright International Organization for Standardization
Provided by IHS Markit under license with ANSI
No reproduction or networking permitted without license from IHS

Order Number: W2233726
Sold to:APTIV [222021100001] - RUTH.M.MONTANO@APTIV.COM,
Not for Resale,2020-08-07 18:02:38 UTC

ColourModelType_LUV	Luminance and colour coordinates U, V – 3 colour values	"exemplary"
ColourModelType_ColourList	Each value reference a pre-defined colour – 1 colour value Requirement: Colour values (A.2.63, A.3.10, A.4.29) for "ColourModelType_ColourList" are defined in the system design phase.	"exemplary"

A.1.15 Radial velocity ambiguity domain {begin, end}

Table A.48 — Signal: Radial velocity ambiguity domain {begin, end}

Name	Radial velocity ambiguity domain {begin, end}		
Description	Description of the Doppler ambiguity caused by under sampling.		
Value type	2D vector real value	**Unit**	(m/s, m/s)

A.1.16 Range ambiguity domain {begin, end}

Table A.49 — Signal: Range ambiguity domain {begin, end}

Name	Range ambiguity domain {begin, end}		
Description	The range of the ambiguity domain is defined by {begin} and {end}. The defined range is only one possible solution for an ambiguous measurement method (e.g. under sampling).		
Value type	2D vector real value	**Unit**	(m, m)

A.1.17 Angle azimuth ambiguity domain {begin, end}

Table A.50 — Signal: Angle azimuth ambiguity domain {begin, end}

Name	Angle azimuth ambiguity domain {begin, end}		
Description	The azimuth angle of the ambiguity domain is defined by {begin} and {end}. The defined azimuth angle is only one possible solution for an ambiguous measurement method.		
Value type	2D vector real value	**Unit**	(rad, rad)

A.1.18 Angle elevation ambiguity domain {begin, end}

Table A.51 — Signal: Angle elevation ambiguity domain {begin, end}

Name	Angle elevation ambiguity domain {begin, end}		
Description	The elevation angle of the ambiguity domain is defined by {begin} and {end}. The defined elevation angle is only one possible solution for an ambiguous measurement method.		
Value type	2D vector real value	**Unit**	(rad, rad)

© ISO 2020 – All rights reserved

Copyright International Organization for Standardization
Provided by IHS Markit under license with ANSI
No reproduction or networking permitted without license from IHS
Order Number: W2233726
Sold to:APTIV [222021100001] - RUTH.M.MONTANO@APTIV.COM,
Not for Resale,2020-08-07 18:02:38 UTC

A.1.19 Scope of interface

Table A.52 — Signal: Scope of interface

Name	Scope of interface		
Description	The scope of interface for which the message is relevant and is defined.		
Value type	enumeration	**Unit**	1

Table A.53 — Enumeration: Scope of interface – Example enumerators

Name	Description	RL enumerator
ScopeOfInterface_OLI	Scope of the interface are all OLIs.	“exemplary”
ScopeOfInterface_FLI	Scope of the interface is the FLI.	“exemplary”
ScopeOfInterface_DLI	Scope of the interface is the DLI.	“exemplary”
ScopeOfInterface_FLIAndDLI	Scope of the interface are FLI and DLI.	“exemplary”
ScopeOfInterface_PMOI	Scope of the interface is the PMOI.	“exemplary”
ScopeOfInterface_RDOI	Scope of the interface is the RDOI.	“exemplary”
ScopeOfInterface_SOI	Scope of the interface is the SOI.	“exemplary”
ScopeOfInterface_All	Scope of the interface are all provided interfaces.	“exemplary”

A.1.20 Vehicle coordinate system type

Table A.54 — Signal: Vehicle coordinate system type

Name	Vehicle coordinate system type		
Description	Defines the reference vehicle coordinate system for the interfaces of the sensor.		
Value type	enumeration	**Unit**	1

Table A.55 — Enumeration: Vehicle coordinate system type

Name	Description	RL enumerator
VehicleCoordinateSystemType_RearAxle	Use vehicle rear axle coordinate system (3.7.13).	Mandatory
VehicleCoordinateSystemType_RoadLevel	Use vehicle road level coordinate system (3.7.16).	Mandatory

© ISO 2020 – All rights reserved

Copyright International Organization for Standardization
Provided by IHS Markit under license with ANSI
No reproduction or networking permitted without license from IHS

Order Number: W2233726
Sold to:APTIV [222021100001] - RUTH.M.MONTANO@APTIV.COM,
Not for Resale,2020-08-07 18:02:38 UTC

A.1.21 Sensor origin position {x, y, z}

Table A.56 — Signal: Sensor origin position {x, y, z}

Name	Sensor origin position {x, y, z}		
Description	The position of the origin of the sensor coordinate system in the ego-vehicle coordinate system (see Vehicle coordinate system type (A.1.20)).		
Value type	3D vector real value	**Unit**	(m, m, m)

A.1.22 Sensor origin position – error {x, y, z}

Table A.57 — Signal: Sensor origin position – error {x, y, z}

Name	Sensor origin position – error {x, y, z}		
Description	Uncertainty of the mounting pose calibration should be included in the interface {x, y, z}. Additional information: If only the static error in the overall system is known, the origin error need not to be send. No high dynamic motion of the vehicle is compensated.		
Value type	3D vector real value	**Unit**	(m, m, m)

A.1.23 Sensor orientation {yaw, pitch, roll}

Table A.58 — Signal: Sensor orientation {yaw, pitch, roll}

Name	Sensor orientation {yaw, pitch, roll}		
Description	The relative orientation of the sensor axis system with respect to the vehicle axis system. The sensor orientation represents the current mounting pose to the best knowledge of the sensor. It includes the pose estimation given by the calibration. The uncertainty of this estimation is given with the corresponding error. The estimation does not include effects due to short-time dynamics, such as pitch angle changes during braking, but can include long-time effects resulting e.g. from luggage in the trunk. Additional information: Sensor orientation is given with {yaw, pitch, roll} angles, which have to be separated in a defined procedure. E.g., the rotations are to be performed yaw first (around the Z-axis), pitch second (around the new Y-axis) and roll third (around the new X-axis) to follow the definition according to ISO 8855:2011.		
Value type	3D vector real value	**Unit**	(rad, rad, rad)

© ISO 2020 – All rights reserved

Copyright International Organization for Standardization
Provided by IHS Markit under license with ANSI
No reproduction or networking permitted without license from IHS

Order Number: W2233726
Sold to:APTIV [222021100001] - RUTH.M.MONTANO@APTIV.COM,
Not for Resale,2020-08-07 18:02:38 UTC

A.1.24 Sensor orientation – error {yaw, pitch, roll}

Table A.59 — Signal: Sensor orientation – error {yaw, pitch, roll}

Name	Sensor orientation – error {yaw, pitch, roll}		
Description	Uncertainty of the mounting pose calibration should be included in the interface {yaw, pitch, roll}. Additional information: If only the static error in the overall system is known, the origin error need not to be send. No high dynamic motion of the vehicle is compensated.		
Value type	3D vector real value	**Unit**	(rad, rad, rad)

A.1.25 Vanishing point {azimuth, elevation}

Table A.60 — Signal: Vanishing point {azimuth, elevation}

Name	Vanishing point {azimuth, elevation}		
Description	A set of lines in the image plane that corresponds to a set of parallel surface lines in the 3D world space converges to a common point in the image space known as the Vanishing point {azimuth, elevation} (A.1.25). Additional information: Vanishing point {azimuth, elevation} (A.1.25) can be calculated frame by frame, but the useful value should be filtered value. Because each frame Vanishing point {azimuth, elevation} (A.1.25) is affected yaw angel, curvature, short time vehicle motion (acceleration, deceleration, bounce, etc.), and longitudinal graduation (uphill, downhill). These effects should be removed by the filter.		
Value type	2D vector real value	**Unit**	(rad, rad)

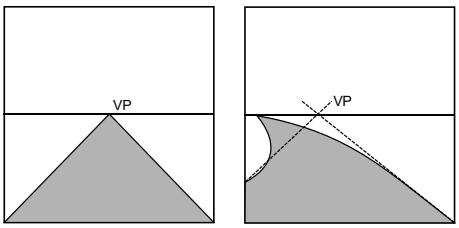

Key

Left: Vanishing point (VP) for straight road

Right: Vanishing point (VP) for curved road

Figure A.1 — Vanishing point {azimuth, elevation} (A.1.25)

© ISO 2020 – All rights reserved

Copyright International Organization for Standardization
Provided by IHS Markit under license with ANSI
No reproduction or networking permitted without license from IHS

Order Number: W2233726
Sold to:APTIV [222021100001] - RUTH.M.MONTANO@APTIV.COM,
Not for Resale,2020-08-07 18:02:38 UTC

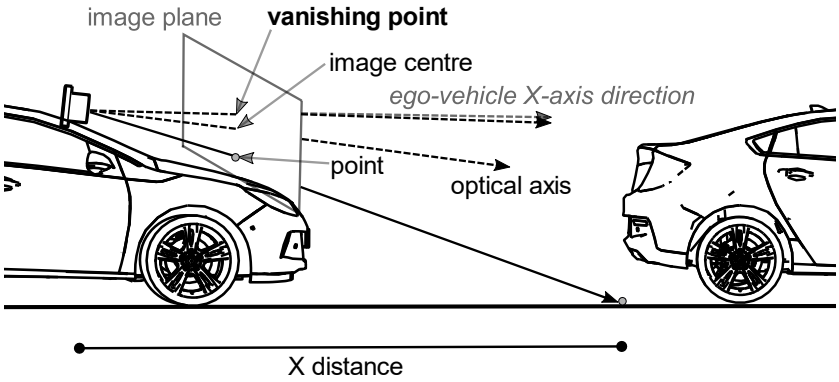

Figure A.2 — Distance estimation with Vanishing point {azimuth, elevation} (A.1.25)[9]

A.1.26 Vanishing point – error {azimuth, elevation}

Table A.61 — Signal: Vanishing point – error {azimuth, elevation}

Name	Vanishing point – error {azimuth, elevation}		
Description	Uncertainty of the Vanishing point {azimuth, elevation} (A.1.25).		
Value type	2D vector real value	**Unit**	(rad, rad)

A.2 Object level entity signals

In this clause signals are defined for the entities of the Potentially moving object interface (7.2), the Road object interface (7.3) and the Static object interface (7.4). These interfaces are located at OLI.

[9] Distance estimation: the optical axis of the sensor is not parallel to the X-axis of the ego-vehicle.

© ISO 2020 – All rights reserved

Copyright International Organization for Standardization
Provided by IHS Markit under license with ANSI
No reproduction or networking permitted without license from IHS
Order Number: W2233726
Sold to:APTIV [222021100001] - RUTH.M.MONTANO@APTIV.COM,
Not for Resale,2020-08-07 18:02:38 UTC

A.2.1 Object ID

Table A.62 — Signal: Object ID

Name	Object ID		
Description	Unique ID of the object within the object lists of the sensor's interfaces. Additional information: Object ID (A.2.1) value is only unique for each sensor's detected entities of OLIs. Object ID (A.2.1) value is unique for the same entity in multiple cycles. Reuse of Object ID (A.2.1) value is possible under defined conditions. Requirement: The reuse of Object ID (A.2.1) value shall be well-defined.		
Value type	integer value	**Unit**	1

A.2.2 Object grouping ID

Table A.63 — Signal: Object grouping ID

Name	Object grouping ID		
Description	A sensor can group objects from the same object interface or different object interfaces of the sensor which are linked together. All grouped objects have the same Object grouping ID (A.2.2). The objects from the same entity have the same Object grouping ID (A.2.2). The ID is unique in one cycle of a sensor considering all OLI. Example: Long vehicles (e.g. truck with trailer) might be described by potentially moving objects. In this case the value logically connects or links one object with another. This value is unique in one cycle of a sensor. Also, in cases in which it is not clear if it is a single traffic participant or multiple, the link might be used. Example: A traffic sign which is mounted on a vehicle. Additional information: Object grouping ID (A.2.2) := 0 if object is not associated with another object.		
Value type	integer value	**Unit**	1

© ISO 2020 – All rights reserved

Copyright International Organization for Standardization
Provided by IHS Markit under license with ANSI
No reproduction or networking permitted without license from IHS

Order Number: W2233726
Sold to:APTIV [222021100001] - RUTH.M.MONTANO@APTIV.COM,
Not for Resale,2020-08-07 18:02:38 UTC

A.2.3 Age

Table A.64 — Signal: Age

Name	Age		
Description	The amount of time that this object has been currently tracked. Additional information: Age (A.2.3) := current time stamp - time stamp when the track for this object has been initiated.		
Value type	[0…] real value	**Unit**	s

A.2.4 Observation – object level

Table A.65 — Signal: Observation – object level

Name	Observation – object level		
Description	A vector containing the last n cycles in which this object has been currently tracked. Additional information: Possible exemplary implementation: 32 element enumeration field representing the last 32 cycles, “Observation_True” := measured, “Observation_False” := predicted/not measured. Observation – object level (A.2.4) is not covered by Age (A.2.3). Observation – object level (A.2.4) is limited in duration. The number of elements of the enumeration field (n) will be defined during system design phase.		
Value type	nD vector enumeration	**Unit**	(1, …, 1)

Table A.66 — Enumeration: Observation – object level – Example enumerators

Name	Description	RL enumerator
Observation_True	The object was observed in the cycle.	“exemplary”
Observation_False	The object was not observed in the cycle. It may be predicted.	“exemplary”

A.2.5 Track quality

Table A.67 — Signal: Track quality

Name	Track quality		
Description	The Track quality (A.2.5) value describes how well the track was predicted of the current observation. Usually there is a variety of signals which are used to set up a track. The quality of the track is changing gradually from a precise prediction where all values met the prediction very close down to a prediction which is based on less signals and where the deviation gets large. A value close to 100 % indicates that both the prediction is very precise and all available signals are used to building the track. A very low value (near 0 %) has a very high deviation from the predicted track and precission of the signals is less.		
Value type	[0…100] real value	**Unit**	%

© ISO 2020 – All rights reserved

Copyright International Organization for Standardization
Provided by IHS Markit under license with ANSI
No reproduction or networking permitted without license from IHS
Order Number: W2233726
Sold to:APTIV [222021100001] - RUTH.M.MONTANO@APTIV.COM,
Not for Resale,2020-08-07 18:02:38 UTC

A.2.6 Measurement status – object level

Table A.68 — Signal: Measurement status – object level

Name	Measurement status – object level		
Description	Objects should be sent out as fast as possible, even if not all statuses are observed and the object's signals might not be fully filled.		
Value type	enumeration	**Unit**	1

Table A.69 — Enumeration: Measurement status – object level – Example enumerators

Name	Description	RL enumerator
MeasurementStatus_Measured	The object was updated with new information from a sensor in the last update cycle of this object list.	"exemplary"
MeasurementStatus_New	This indicates the first occurrence of this particular object in the object list.	"exemplary"
MeasurementStatus_Predicted	The object was predicted without any new information with respect to the previous update cycle.	"exemplary"
MeasurementStatus_PartlyMeasured	The object was partly updated with new information from a sensor in the last update cycle of this object list. The measurement was incomplete and could therefore only partially update the parameters of this object. The remaining parameters of this object are unchanged or predicted for this measurement cycle.	"exemplary"
MeasurementStatus_Invalid	The object is invalid in this cycle.	"exemplary"
MeasurementStatus_PredictedOccluded	Tracked object is temporarily occluded by another entity.	"exemplary"

© ISO 2020 – All rights reserved

Copyright International Organization for Standardization
Provided by IHS Markit under license with ANSI
No reproduction or networking permitted without license from IHS

Order Number: W2233726
Sold to:APTIV [222021100001] - RUTH.M.MONTANO@APTIV.COM,
Not for Resale,2020-08-07 18:02:38 UTC

A.2.7 Reference point

Table A.70 — Signal: Reference point

Name	Reference point		
Description	Outer edges of the recognized object's bounding box. During tracking, this point can change in each cycle. Additional information: Only for cuboid model valid. Reference point (A.2.7) is always on the outer edge with z value "middle" (middle height), if not defined in enumeration. "middle" is the geometrical middle of the bounding box for each axis. If parameter is not used, the Reference point (A.2.7) is located in the "RP_MidsideMidwidthMidheight" of the object's bounding box. Front/rear, left/right, top/bottom is defined w.r.t. object's orientation. Naming for enumerators: - Front-Midside-Rear - Left-Midwidth-Right - Top-Midheight-Bottom		
Value type	enumeration	**Unit**	1

Table A.71 — Enumeration: Reference point – Example enumerators

Name	Description	RL enumerator
RP_FrontLeftTop	The Reference point (A.2.7) is located at the front of the bounding box at the left edge, at top.	"exemplary"
RP_FrontMidwidthTop	The Reference point (A.2.7) is located at the front of the bounding box at midwidth, at top.	"exemplary"
RP_FrontRightTop	The Reference point (A.2.7) is located at the front of the bounding box at the right edge, at top.	"exemplary"
RP_MidsideLeftTop	The Reference point (A.2.7) is located at the left of the bounding box at midside, at top.	"exemplary"
RP_MidsideMidwidthTo p	The Reference point (A.2.7) is located at the geometric centre of the bounding box's top plane.	"exemplary"
RP_MidsideRightTop	The Reference point (A.2.7) is located at the right of the bounding box at midside, at top.	"exemplary"
RP_RearLeftTop	The Reference point (A.2.7) is located at the rear of the bounding box at the left edge, at top.	"exemplary"
RP_RearMidwidthTop	The Reference point (A.2.7) is located at the rear of the bounding box at midwidth, at top.	"exemplary"
RP_RearRightTop	The Reference point (A.2.7) is located at the rear of the bounding box at the right edge, at top.	"exemplary"
RP_FrontLeftMidheight	The Reference point (A.2.7) is located at the front of the bounding box at the left edge, at midheight.	"exemplary"
RP_FrontMidwidthMidh eight	The Reference point (A.2.7) is located at the geometric centre of the bounding box's front plane.	"exemplary"

© ISO 2020 – All rights reserved

Copyright International Organization for Standardization
Provided by IHS Markit under license with ANSI
No reproduction or networking permitted without license from IHS
Order Number: W2233726
Sold to:APTIV [222021100001] - RUTH.M.MONTANO@APTIV.COM,
Not for Resale,2020-08-07 18:02:38 UTC

RP_FrontRightMidheight	The Reference point (A.2.7) is located at the front of the bounding box at the right edge, at midheight.	“exemplary”
RP_MidsideLeftMidheight	The Reference point (A.2.7) is located at the geometric centre of the bounding box’s left side plane.	“exemplary”
RP_MidsideMidwidthMidheight	The Reference point (A.2.7) is located at the geometric centre of the bounding box.	“exemplary”
RP_MidsideRightMidheight	The Reference point (A.2.7) is located at the geometric centre of the bounding box’s right side plane.	“exemplary”
RP_RearLeftMidheight	The Reference point (A.2.7) is located at the rear of the bounding box at the left edge, at midheight.	“exemplary”
RP_RearMidwidthMidheight	The Reference point (A.2.7) is located at the geometric centre of the bounding box’s rear plane.	“exemplary”
RP_RearRightMidheight	The Reference point (A.2.7) is located at the rear of the bounding box at the right edge, at midheight.	“exemplary”
RP_FrontLeftBottom	The Reference point (A.2.7) is located at the front of the bounding box at the left edge, at bottom.	“exemplary”
RP_FrontMidwidthBottom	The Reference point (A.2.7) is located at the front of the bounding box at midwidth, at bottom.	“exemplary”
RP_FrontRightBottom	The Reference point (A.2.7) is located at the front of the bounding box at the right edge, at bottom.	“exemplary”
RP_MidsideLeftBottom	The Reference point (A.2.7) is located at the left of the bounding box at midside, at bottom.	“exemplary”
RP_MidsideMidwidthBottom	The Reference point (A.2.7) is located at the geometric centre of the bounding box’s bottom plane.	“exemplary”
RP_MidsideRightBottom	The Reference point (A.2.7) is located at the right of the bounding box at midside, at bottom.	“exemplary”
RP_RearLeftBottom	The Reference point (A.2.7) is located at the rear of the bounding box at the left edge, at bottom.	“exemplary”
RP_RearMidwidthBottom	The Reference point (A.2.7) is located at the rear of the bounding box at midwidth, at bottom.	“exemplary”
RP_RearRightBottom	The Reference point (A.2.7) is located at the rear of the bounding box at the right edge, at bottom.	“exemplary”

© ISO 2020 – All rights reserved

Copyright International Organization for Standardization
Provided by IHS Markit under license with ANSI
No reproduction or networking permitted without license from IHS

Order Number: W2233726
Sold to:APTIV [222021100001] - RUTH.M.MONTANO@APTIV.COM,
Not for Resale,2020-08-07 18:02:38 UTC

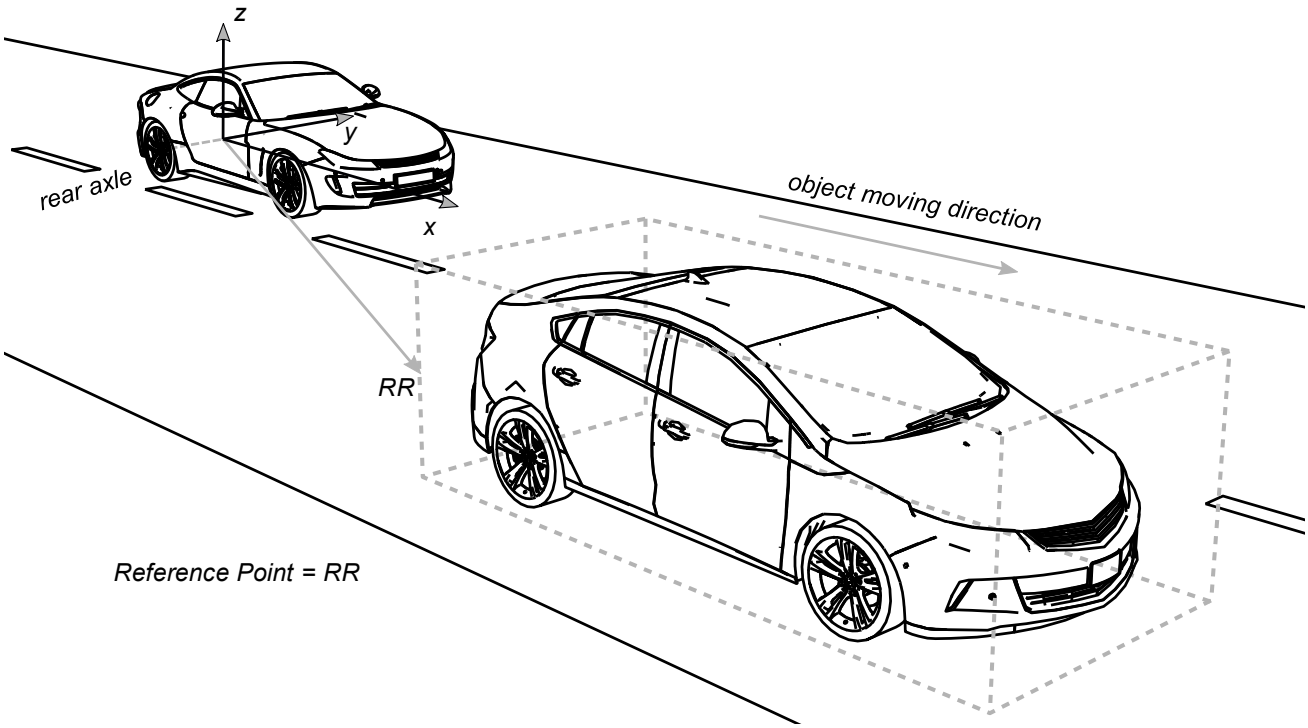

Figure A.3 — Reference point (A.2.7) at "RP_RearRightMidheight"

A.2.8 Position {x, y, z}

Table A.72 — Signal: Position {x, y, z}

Name	Position {x, y, z}		
Description	Position {x, y, z} (A.2.8) of the Reference point (A.2.7) in the defined vehicle coordinate system of the sensor (see Vehicle coordinate system type (A.1.20)). Additional information: Origin of object list coordinate system is ego-vehicle coordinate system (see Figure A.3 — Reference point (A.2.7) at "RP_RearRightMidheight"). If no Reference point (A.2.7) is defined, the reference point is located at the geometric centre (i.e. "RP_MidsideMidwidthMidheight") of the bounding box.		
Value type	3D vector real value	**Unit**	(m, m, m)

A.2.9 Position – error {x, y, z}

Table A.73 — Signal: Position – error {x, y, z}

Name	Position – error {x, y, z}		
Description	The error represents the uncertainty of the state estimation of {x, y, z} position (see Figure A.3 — Reference point (A.2.7) at "RP_RearRightMidheight"))..		
Value type	3D vector real value	**Unit**	(m, m, m)

© ISO 2020 – All rights reserved

Copyright International Organization for Standardization
Provided by IHS Markit under license with ANSI
No reproduction or networking permitted without license from IHS
Order Number: W2233726
Sold to:APTIV [222021100001] - RUTH.M.MONTANO@APTIV.COM,
Not for Resale,2020-08-07 18:02:38 UTC

A.2.10 Orientation {yaw, pitch, roll}

Table A.74 — Signal: Orientation {yaw, pitch, roll}

Name	Orientation {yaw, pitch, roll}		
Description	Orientation {yaw, pitch, roll} (A.2.10) of the object bounding box in the ego-vehicle coordinate system (see Vehicle coordinate system type (A.1.20)). The bounding box is aligned such that X-axis points towards moving direction of the object (see Figure A.4 — Ego-vehicle and object dynamics of a potentially moving object (second vehicle)).		
Value type	3D vector real value	**Unit**	(rad, rad, rad)

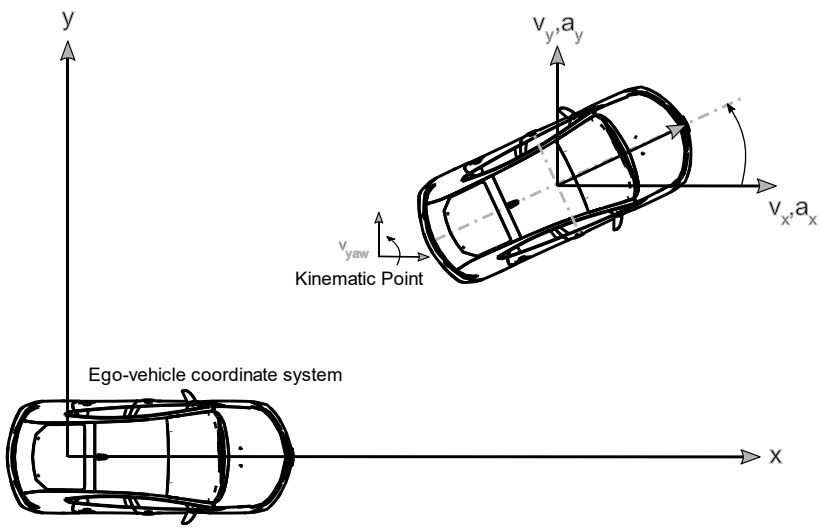

Figure A.4 — Ego-vehicle and object dynamics of a potentially moving object (second vehicle)

A.2.11 Orientation – error {yaw, pitch, roll}

Table A.75 — Signal: Orientation – error {yaw, pitch, roll}

Name	Orientation – error {yaw, pitch, roll}		
Description	The error represents the uncertainty of the state estimation of orientation {yaw, pitch, roll} (see Figure A.4 — Ego-vehicle and object dynamics of a potentially moving object (second vehicle)).		
Value type	3D vector real value	**Unit**	(rad, rad, rad)

A.2.12 Velocity {x, y, z}

Table A.76 — Signal: Velocity {x, y, z}

Name	Velocity {x, y, z}		
Description	The velocity of the object w.r.t. Motion type (A.1.13) (see Figure A.4 — Ego-vehicle and object dynamics of a potentially moving object (second vehicle)).		
Value type	3D vector real value	**Unit**	(m/s, m/s, m/s)

© ISO 2020 – All rights reserved

Copyright International Organization for Standardization
Provided by IHS Markit under license with ANSI
No reproduction or networking permitted without license from IHS

Order Number: W2233726
Sold to:APTIV [222021100001] - RUTH.M.MONTANO@APTIV.COM,
Not for Resale,2020-08-07 18:02:38 UTC

A.2.13 Velocity – error {x, y, z}

Table A.77 — Signal: Velocity – error {x, y, z}

Name	Velocity – error {x, y, z}		
Description	The error represents the uncertainty of the state estimation of {x, y, z} w.r.t. Motion type (A.1.13) (see Figure A.4 — Ego-vehicle and object dynamics of a potentially moving object (second vehicle)).		
Value type	3D vector real value	**Unit**	(m/s, m/s, m/s)

A.2.14 Acceleration {x, y, z}

Table A.78 — Signal: Acceleration {x, y, z}

Name	Acceleration {x, y, z}		
Description	The acceleration of the object w.r.t. Motion type (A.1.13) (see Figure A.4 — Ego-vehicle and object dynamics of a potentially moving object (second vehicle)).		
Value type	3D vector real value	**Unit**	(m/s^2, m/s^2, m/s^2)

A.2.15 Acceleration – error {x, y, z}

Table A.79 — Signal: Acceleration – error {x, y, z}

Name	Acceleration – error {x, y, z}		
Description	The error represents the uncertainty of the state estimation of {x, y, z} acceleration w.r.t. Motion type (A.1.13) (see Figure A.4 — Ego-vehicle and object dynamics of a potentially moving object (second vehicle)).		
Value type	3D vector real value	**Unit**	(m/s^2, m/s^2, m/s^2)

A.2.16 Kinematic point {x, y, z}

Table A.80 — Signal: Kinematic point {x, y, z}

Name	Kinematic point {x, y, z}		
Description	Position of the kinematic point in ego-vehicle coordinate system (see Vehicle coordinate system type (A.1.20)). The Kinematic point {x, y, z} (A.2.16) can be located outside the bounding box of the object (see Figure A.4 — Ego-vehicle and object dynamics of a potentially moving object (second vehicle)). Additional information: The kinematic point can be arbitrary for the object. It can be outside the object. The kinematic point is the origin of the rotation rates (see Orientation rate kinematic point {yaw} (A.2.18)).		
Value type	3D vector real value	**Unit**	(m, m, m)

© ISO 2020 – All rights reserved

Copyright International Organization for Standardization
Provided by IHS Markit under license with ANSI
No reproduction or networking permitted without license from IHS

Order Number: W2233726
Sold to:APTIV [222021100001] - RUTH.M.MONTANO@APTIV.COM,
Not for Resale,2020-08-07 18:02:38 UTC

A.2.17 Kinematic point – error {x, y, z}

Table A.81 — Signal: Kinematic point – error {x, y, z}

Name	Kinematic point – error {x, y, z}		
Description	The error represents the uncertainty of the state estimation of Kinematic point {x, y, z} (A.2.16) (see Figure A.4 — Ego-vehicle and object dynamics of a potentially moving object (second vehicle)).		
Value type	3D vector real value	**Unit**	(m, m, m)

A.2.18 Orientation rate kinematic point {yaw}

Table A.82 — Signal: Orientation rate kinematic point {yaw}

Name	Orientation rate kinematic point {yaw}		
Description	{Yaw}-rate of the object at the Kinematic point {x, y, z} (A.2.16) w.r.t. Motion type (A.1.13) (see Figure A.4 — Ego-vehicle and object dynamics of a potentially moving object (second vehicle)).		
Value type	1D vector real value	**Unit**	rad/s

A.2.19 Orientation rate kinematic point – error {yaw}

Table A.83 — Signal: Orientation rate kinematic point – error {yaw}

Name	Orientation rate kinematic point – error {yaw}		
Description	The error of the {Yaw}-rate at the object's Kinematic point {x, y, z} (A.2.16) w.r.t. Motion type (A.1.13) (see Figure A.4 — Ego-vehicle and object dynamics of a potentially moving object (second vehicle)).		
Value type	1D vector real value	**Unit**	rad/s

A.2.20 Road level

Table A.84 — Signal: Road level

Name	Road level		
Description	A road level indication provides information about relevance to ego vehicle road level, e.g. in case no z value for position can be given. Additional information: In situations it happens that a target vehicle is detected by sensor, but the vehicle is on different road levels compared to the ego vehicle (e.g. motorway bridge ahead on which a vehicle is crossing the motorway). This signal indicates the relevance to the ego lane level.		
Value type	enumeration	**Unit**	1

© ISO 2020 – All rights reserved

Copyright International Organization for Standardization
Provided by IHS Markit under license with ANSI
No reproduction or networking permitted without license from IHS
Order Number: W2233726
Sold to:APTIV [222021100001] - RUTH.M.MONTANO@APTIV.COM,
Not for Resale,2020-08-07 18:02:38 UTC

Table A.85 — Enumeration: Road level – Example enumerators

Name	Description	RL enumerator
RoadLevel_EgoRoadLevel	The object is on the same road level as the ego vehicle.	“exemplary”
RoadLevel_RoadLevelAbove	The object is on a different road level as the ego vehicle. It is on a level above.	“exemplary”
RoadLevel_RoadLevelBelow	The object is on a different road level as the ego vehicle. It is on a level below.	“exemplary”

A.2.21 Movement status

Table A.86 — Signal: Movement status

Name	Movement status		
Description	Information about a possible movement of the object during tracking.		
Value type	enumeration	**Unit**	1

Table A.87 — Enumeration: Movement status – Example enumerators

Name	Description	RL enumerator
MovementStatus_Moving	Object moves currently.	“exemplary”
MovementStatus_StoppedMoving	Object movement was detected in tracking history.	“exemplary”
MovementStatus_Stationary	Until now no object movement was detected in tracking history.	“exemplary”

© ISO 2020 – All rights reserved

Copyright International Organization for Standardization
Provided by IHS Markit under license with ANSI
No reproduction or networking permitted without license from IHS
Order Number: W2233726
Sold to:APTIV [222021100001] - RUTH.M.MONTANO@APTIV.COM,
Not for Resale,2020-08-07 18:02:38 UTC

A.2.22 Dimension {length, width, height}

Table A.88 — Signal: Dimension {length, width, height}

Name	Dimension {length, width, height}		
Description	{length}: Distance between reference point definition (see Table A.71 — Enumeration: Reference point – Example enumerators) rear plane and front plane of the bounding box. It is the object dimension along X-axis in local coordinate system. The position of the reference point is the origin of the bounding box. {width}: Distance between reference point definition (see Table A.71 — Enumeration: Reference point – Example enumerators) left side plane and right side plane of the bounding box. It is the object dimension along Y-axis in local coordinate system. The position of the reference point is the origin of the bounding box. {height}: Distance between reference point definition (see Table A.71 — Enumeration: Reference point – Example enumerators) top plane and bottom plane of the bounding box. It is the object dimension along Z-axis in local coordinate system. The position of the reference point is the origin of the bounding box. Additional information: No output of predefined dimensions, if object's dimension cannot be observed (e.g. near objects in small FOV) The degree to which small structures are part of the dimensions shall be defined by the sensor.		
Value type	3D vector real value	**Unit**	(m, m, m)

A.2.23 Dimension – error {length, width, height}

Table A.89 — Signal: Dimension – error {length, width, height}

Name	Dimension – error {length, width, height}		
Description	Error of the object’s bounding box {length, width, height}.		
Value type	3D vector real value	**Unit**	(m, m, m)

A.2.24 Bounding box ground clearance

Table A.90 — Signal: Bounding box ground clearance

Name	Bounding box ground clearance		
Description	Maximum height of the clearance area between ground and object lower shape. Bounding box is indicated with the dashed box (see Figure A.5 — Bounding box ground clearance (A.2.24)).		
Value type	[0…] real value	**Unit**	m

© ISO 2020 – All rights reserved

Copyright International Organization for Standardization
Provided by IHS Markit under license with ANSI
No reproduction or networking permitted without license from IHS

Order Number: W2233726
Sold to:APTIV [222021100001] - RUTH.M.MONTANO@APTIV.COM,
Not for Resale,2020-08-07 18:02:38 UTC

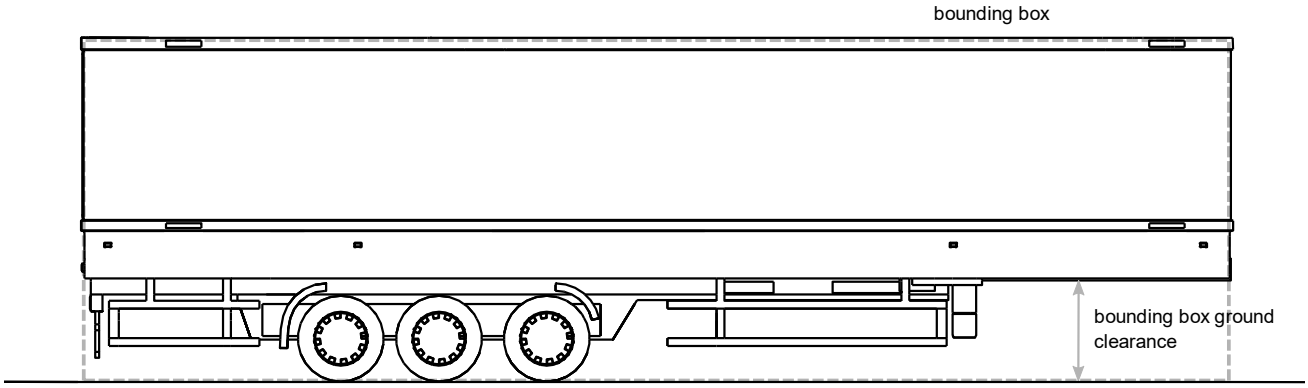

Figure A.5 — Bounding box ground clearance (A.2.24)

A.2.25 Included geometric structures

Table A.91 — Signal: Included geometric structures

Name	Included geometric structures		
Description	Geometrical structures that are taken into account in the bounding boxes.		
Value type	enumeration	**Unit**	1

Table A.92 — Enumeration: Included geometric structures – Example enumerators

Name	Description	RL enumerator
IncludedGeometricStructures_WithoutMirrors	Bounding box dimensions exclude vehicle mirrors.	“exemplary”
IncludedGeometricStructures_WithMirrors	Bounding box dimensions include vehicle mirrors.	“exemplary”

A.2.26 Existence probability – object level

Table A.93 — Signal: Existence probability – object level

Name	Existence probability – object level		
Description	Represents the recognition quality and certainty of an object. A higher value indicates an object which exists with high probability while a lower value indicates a potential false positive object. It depends on two factors: quality and confidence. Additional information: Use as confidence measure where a low value means less confidence and a high value indicates strong confidence. Low values may be possible in the first cycles.		
Value type	[0…100] real value	**Unit**	%

Copyright International Organization for Standardization
Provided by IHS Markit under license with ANSI
No reproduction or networking permitted without license from IHS
Order Number: W2233726
Sold to:APTIV [222021100001] - RUTH.M.MONTANO@APTIV.COM,
Not for Resale,2020-08-07 18:02:38 UTC

A.2.27 Number of valid potentially moving object probability classifications

Table A.94 — Signal: Number of valid potentially moving object probability classifications

Name	Number of valid potentially moving object probability classifications		
Description	The Number of valid potentially moving object probability classifications (A.2.27) tuples type and value for a potentially moving object.		
Value type	[0…] integer value	**Unit**	1

A.2.28 Potentially moving object classification probability type

Table A.95 — Signal: Potentially moving object classification probability type

Name	Potentially moving object classification probability type		
Description	Exemplary list of probability classes. Represented as a normalized probability vector of the current Potentially moving object classification probability type (A.2.28) classification estimation of the object.		
Value type	enumeration	**Unit**	1

Table A.96 — Enumeration: Potentially moving object classification probability type – Example enumerators

Name	Description	RL enumerator
PMOProbability_Car	Probability type car.	“exemplary”
PMOProbability_HeavyTruck	Probability type heavy truck.	“exemplary”
PMOProbability_Van	Probability type van.	“exemplary”
PMOProbability_Bus	Probability type bus.	“exemplary”
PMOProbability_Trailer	Probability type trailer.	“exemplary”
PMOProbability_Semitrailer	Probability type semitrailer.	“exemplary”
PMOProbability_Tram	Probability type tram.	“exemplary”
PMOProbability_Train	Probability type train.	“exemplary”
PMOProbability_OtherVehicle	Probability type unidentified vehicle.	“exemplary”
PMOProbability_Motorbike	Probability type motorbike.	“exemplary”
PMOProbability_Animal	Probability type animal.	“exemplary”
PMOProbability_Bicycle	Probability type bicycle.	“exemplary”
PMOProbability_Tricycle	Probability type tricycle.	“exemplary”
PMOProbability_Pedestrian	Probability type pedestrian.	“exemplary”
PMOProbability_Wheelchair	Probability type wheelchair.	“exemplary”

© ISO 2020 – All rights reserved

Copyright International Organization for Standardization
Provided by IHS Markit under license with ANSI
No reproduction or networking permitted without license from IHS

Order Number: W2233726
Sold to:APTIV [222021100001] - RUTH.M.MONTANO@APTIV.COM,
Not for Resale,2020-08-07 18:02:38 UTC

A.2.29 Potentially moving object classification probability value

Table A.97 — Signal: Potentially moving object classification probability value

Name	Potentially moving object classification probability value		
Description	A probability for the corresponding Potentially moving object classification probability type (A.2.28). All classification probabilities for each potentially moving object shall sum to 100 %.		
Value type	[0…100] real value	**Unit**	%

A.2.30 Number of valid lights

Table A.98 — Signal: Number of valid lights

Name	Number of valid lights		
Description	The Number of valid lights (A.2.30) tuples type and value for a potentially moving object.		
Value type	[0…] integer value	**Unit**	1

A.2.31 Light type

Table A.99 — Signal: Light type

Name	Light type		
Description	List of electric light classifications.		
Value type	enumeration	**Unit**	1

Table A.100 — Enumeration: Light type – Example enumerators

Name	Description	RL enumerator
LightType_LeftFlashLight	Vehicle's left flash light.	"exemplary"
LightType_RightFlashLight	Vehicle's right flash light.	"exemplary"
LightType_HazardFlashLight	Vehicle's hazard flash light.	"exemplary"
LightType_LeftBrakeLight	Vehicle's left break light.	"exemplary"
LightType_RightBrakeLight	Vehicle's right break light.	"exemplary"
LightType_CentreBrakeLight	Vehicle's centre break light.	"exemplary"
LightType_LeftOtherLight	Vehicle's left light (no flash or break light).	"exemplary"
LightType_RightOtherLight	Vehicle's right light (no flash or break light).	"exemplary"
LightType_CentreOtherLight	Vehicle's light not on the left or right site (no flash or break light).	"exemplary"

© ISO 2020 – All rights reserved

Copyright International Organization for Standardization
Provided by IHS Markit under license with ANSI
No reproduction or networking permitted without license from IHS

Order Number: W2233726
Sold to:APTIV [222021100001] - RUTH.M.MONTANO@APTIV.COM,
Not for Resale,2020-08-07 18:02:38 UTC

A.2.32 Light status

Table A.101 — Signal: Light status

Name	Light status		
Description	Status of an object's electric light. Additional information: Possible to have more than one active light signals (e.g. low beam and blinker).		
Value type	enumeration	**Unit**	1

Table A.102 — Enumeration: Light status – Example enumerators

Name	Description	RL enumerator
LightStatus_Off	Light status is off.	"exemplary"
LightStatus_On	Light status is on.	"exemplary"
LightStatus_Flash	Light status is cyclic flashing.	"exemplary"
LightStatus_Brake	Light status indicates braking.	"exemplary"
LightStatus_Warning	Light status indicates warning.	"exemplary"
LightStatus_Other	Light status could not be determined.	"exemplary"

A.2.33 Number of valid persons poses

Table A.103 — Signal: Number of valid persons poses

Name	Number of valid persons poses		
Description	The Number of valid persons poses (A.2.33) tuples type and value for a potentially moving object, a person.		
Value type	[0…] integer value	**Unit**	1

A.2.34 Person pose type

Table A.104 — Signal: Person pose type

Name	Person pose type		
Description	Person pose type (A.2.34) defines the pose which is defined by Person pose {yaw, pitch, roll} (A.2.35).		
Value type	enumeration	**Unit**	1

© ISO 2020 – All rights reserved

Copyright International Organization for Standardization
Provided by IHS Markit under license with ANSI
No reproduction or networking permitted without license from IHS

Order Number: W2233726
Sold to:APTIV [222021100001] - RUTH.M.MONTANO@APTIV.COM,
Not for Resale,2020-08-07 18:02:38 UTC

Table A.105 — Enumeration: Person pose type – Example enumerators

Name	Description	RL enumerator
PersonPoseType_Head	The person head pose is defined by Person pose {yaw, pitch, roll} (A.2.35).	"exemplary"
PersonPoseType_UpperBody	The person upper body pose is defined by Person pose {yaw, pitch, roll} (A.2.35).	"exemplary"
PersonPoseType_LeftHand	Described angles are measured between the normal to the hand palm relative to the ego-vehicle axis system (see Vehicle coordinate system type (A.1.20)) and is defined by Person pose {yaw, pitch, roll} (A.2.35).	"exemplary"
PersonPoseType_RightHand	Described angles are measured between the normal to the hand palm relative to the ego-vehicle axis system (see Vehicle coordinate system type (A.1.20)) and is defined by Person pose {yaw, pitch, roll} (A.2.35).	"exemplary"
PersonPoseType_LeftLowerArm	Described angles are measured between long axis of the body extremities (orientation towards the end of the extremity) relative to the ego-vehicle axis system (see Vehicle coordinate system type (A.1.20)) and is defined by Person pose {yaw, pitch, roll} (A.2.35).	"exemplary"
PersonPoseType_RightLowerArm	Described angles are measured between long axis of the body extremities (orientation towards the end of the extremity) relative to the ego-vehicle axis system (see Vehicle coordinate system type (A.1.20)) and is defined by Person pose {yaw, pitch, roll} (A.2.35).	"exemplary"
PersonPoseType_LeftUpperArm	Described angles are measured between long axis of the body extremities (orientation towards the end of the extremity) relative to the ego-vehicle axis system (see Vehicle coordinate system type (A.1.20)) and is defined by Person pose {yaw, pitch, roll} (A.2.35).	"exemplary"
PersonPoseType_RightUpperArm	Described angles are measured between long axis of the body extremities (orientation towards the end of the extremity) relative to the ego-vehicle axis system (see Vehicle coordinate system type (A.1.20)) and is defined by Person pose {yaw, pitch, roll} (A.2.35).	"exemplary"
PersonPoseType_RightUpperLeg	Described angles are measured between long axis of the body extremities (orientation towards the end of the extremity) relative to the ego-vehicle axis system (see Vehicle coordinate system type (A.1.20)) and is defined by Person pose {yaw, pitch, roll} (A.2.35).	"exemplary"
PersonPoseType_LeftLowerLeg	Described angles are measured between long axis of the body extremities (orientation towards the end of the extremity) relative to the ego-vehicle axis system (see Vehicle coordinate system type (A.1.20)) and is defined by Person pose {yaw, pitch, roll} (A.2.35).	"exemplary"
PersonPoseType_RightLowerLeg	Described angles are measured between long axis of the body extremities (orientation towards the end of the extremity) relative to the ego-vehicle axis system (see Vehicle coordinate system type (A.1.20)) and is defined by Person pose {yaw, pitch, roll} (A.2.35).	"exemplary"

© ISO 2020 – All rights reserved

Copyright International Organization for Standardization
Provided by IHS Markit under license with ANSI
No reproduction or networking permitted without license from IHS

Order Number: W2233726
Sold to:APTIV [222021100001] - RUTH.M.MONTANO@APTIV.COM,
Not for Resale,2020-08-07 18:02:38 UTC

PersonPoseType_LeftFoot	Described angles are measured between the foot sole direction towards the toe relative to the ego-vehicle axis system (see Vehicle coordinate system type (A.1.20)) and is defined by Person pose {yaw, pitch, roll} (A.2.35).	"exemplary"
PersonPoseType_RightFoot	Described angles are measured between the foot sole direction towards the toe relative to the ego-vehicle axis system (see Vehicle coordinate system type (A.1.20)) and is defined by Person pose {yaw, pitch, roll} (A.2.35).	"exemplary"

A.2.35 Person pose {yaw, pitch, roll}

Table A.106 — Signal: Person pose {yaw, pitch, roll}

Name	Person pose {yaw, pitch, roll}		
Description	A defined pedestrian-pose for behaviour prediction. Additional information: Describes the angles w.r.t. the ego-vehicle orientation, i.e. the ego-vehicle axis system (see Vehicle coordinate system type (A.1.20)).		
Value type	3D vector real value	**Unit**	(rad, rad, rad)

A.2.36 Person pose – error {yaw, pitch, roll}

Table A.107 — Signal: Person pose – error {yaw, pitch, roll}

Name	Person pose – error {yaw, pitch, roll}		
Description	Error of a defined pedestrian-pose for behaviour prediction.		
Value type	3D vector real value	**Unit**	(rad, rad, rad)

A.2.37 Object lane association

Table A.108 — Signal: Object lane association

Name	Object lane association		
Description	An association of the object to neighbouring lanes w.r.t. the ego-vehicle's lane.		
Value type	enumeration	**Unit**	1

Table A.109 — Enumeration: Object lane association – Example enumerators

Name	Description	RL enumerator
ObjectLaneAssociation_EgoLane	Object is in ego lane.	"exemplary"
ObjectLaneAssociation_LeftNeighbouringLane	Object is in left neighbouring lane.	"exemplary"
ObjectLaneAssociation_RightNeighbouringLane	Object is in right neighbouring lane.	"exemplary"

© ISO 2020 – All rights reserved

Copyright International Organization for Standardization
Provided by IHS Markit under license with ANSI
No reproduction or networking permitted without license from IHS

Order Number: W2233726
Sold to:APTIV [222021100001] - RUTH.M.MONTANO@APTIV.COM,
Not for Resale,2020-08-07 18:02:38 UTC

ObjectLaneAssociation_EgoRightLane	Object is located between ego and right neighbouring lane.	“exemplary”
ObjectLaneAssociation_EgoLeftLane	Object is located between ego and left neighbouring lane.	“exemplary”

A.2.38 Angle to object edge to lane {left edge right lane, right edge left lane}

Table A.110 — Signal: Angle to object edge to lane {left edge right lane, right edge left lane}

Name	Angle to object edge to lane {left edge right lane, right edge left lane}		
Description	{left edge right lane}: Angle to the left edge of the object to the right centre of the lane. {right edge left lane}: Angle to the right edge of the object to the left centre of the lane. Additional information: Signal, definition of 0 rad and positive angle is defined in the following Figure. The edge is always the nearest edge of the object’s bounding box to the ego-vehicle. The centre of the road marker is the basis for the calculation.		
Value type	2D vector real value	**Unit**	(rad, rad)

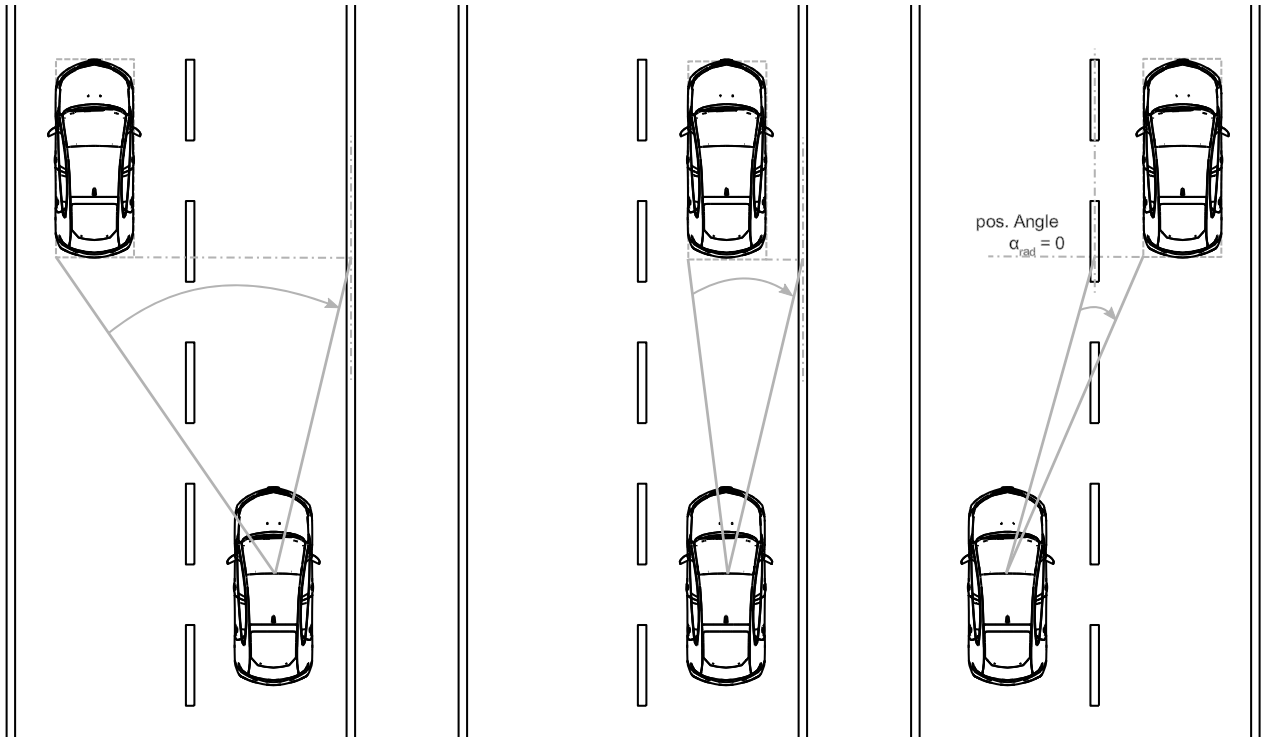

Key

Left: Left edge right lane

Middle: Left edge right lane

Right: Right edge left lane

Figure A.6 — Angle to object edge to lane {left edge right lane, right edge left lane}

Copyright International Organization for Standardization
Provided by IHS Markit under license with ANSI
No reproduction or networking permitted without license from IHS
Order Number: W2233726
Sold to:APTIV [222021100001] - RUTH.M.MONTANO@APTIV.COM,
Not for Resale,2020-08-07 18:02:38 UTC

A.2.39 Angle to object edge to lane – error {left edge right lane, right edge left lane}

Table A.111 — Signal: Angle to object edge to lane – error {left edge right lane, right edge left lane}

Name	Angle to object edge to lane – error {left edge right lane, right edge left lane}		
Description	Error of the angle to the left- resp. right edge of the object.		
Value type	2D vector real value	**Unit**	(rad, rad)

A.2.40 Percentage side lane {left, right}

Table A.112 — Signal: Percentage side lane {left, right}

Name	Percentage side lane {left, right}		
Description	{left, right} assignment of the object to specified lane in percent. Additional information: Percentage value of the object width in the corresponding {left, right} lane. The centre of the road marker is the basis for the calculation.		
Value type	[0…100] 2D vector real value	**Unit**	(%, %)

A.2.41 Angular position {azimuth}

Table A.113 — Signal: Angular position {azimuth}

Name	Angular position {azimuth}		
Description	Lateral position of 2D bounding box centre measured in 2D image as angle in the sensor's coordinate system.		
Value type	1D vector real value	**Unit**	rad

A.2.42 Angular velocity {azimuth}

Table A.114 — Signal: Angular velocity {azimuth}

Name	Angular velocity {azimuth}		
Description	Angular velocity of 2D bounding box centre measured in 2D image in the sensor`s coordinate system. Additional information: Requires calibrated sensor.		
Value type	1D vector real value	**Unit**	rad/s

© ISO 2020 – All rights reserved

Copyright International Organization for Standardization
Provided by IHS Markit under license with ANSI
No reproduction or networking permitted without license from IHS

Order Number: W2233726
Sold to:APTIV [222021100001] - RUTH.M.MONTANO@APTIV.COM,
Not for Resale,2020-08-07 18:02:38 UTC

A.2.43 Scale change – object level

Table A.115 — Signal: Scale change – object level

Name	Scale change – object level		
Description	Change in scale of the object in sensor's projection plane. Indication whether the object gets closer to the ego-vehicle (possible collision) or if it is departing from the ego-vehicle.		
Value type	real value	**Unit**	%/s

A.2.44 Entity radar cross section

Table A.116 — Signal: Entity radar cross section

Name	Entity radar cross section		
Description	Radar cross section of the recognized object. Additional information: Representative RCS of the complete recognized object.		
Value type	real value	**Unit**	dB m^2

A.2.45 Entity lidar reflectivity

Table A.117 — Signal: Entity lidar reflectivity

Name	Entity lidar reflectivity		
Description	Lidar reflectivity of the recognized object, assuming homogeneous Lambertian reflectivity for the used laser wave length. Additional information: Representative lidar reflectivity of the complete recognized object.		
Value type	real value	**Unit**	%

A.2.46 Road type

Table A.118 — Signal: Road type

Name	Road type		
Description	For the ego-vehicle relevant type of the road.		
Value type	enumeration	**Unit**	1

© ISO 2020 – All rights reserved

Copyright International Organization for Standardization
Provided by IHS Markit under license with ANSI
No reproduction or networking permitted without license from IHS

Order Number: W2233726
Sold to:APTIV [222021100001] - RUTH.M.MONTANO@APTIV.COM,
Not for Resale,2020-08-07 18:02:38 UTC

Table A.119 — Enumeration: Road type – Example enumerators

Name	Description	RL enumerator
RoadType_Highway	The road is a highway.	“exemplary”
RoadType_Rural	The road is a rural road.	“exemplary”
RoadType_City	The road is a city road.	“exemplary”
RoadType_OffRoad	The road is unpaved.	“exemplary”

A.2.47 Number of valid road surface classifications

Table A.120 — Signal: Number of valid road surface classifications

Name	Number of valid road surface classifications		
Description	The current Number of valid road surface classifications (A.2.47) of road surfaces. Classifications are defined by type and probability value.		
Value type	[0…] integer value	**Unit**	1

A.2.48 Road surface type

Table A.121 — Signal: Road surface type

Name	Road surface type		
Description	For the ego-vehicle relevant type of the road surface.		
Value type	enumeration	**Unit**	1

Table A.122 — Enumeration: Road surface type – Example enumerators

Name	Description	RL enumerator
RoadSurfaceType_RomanRoad	The road is a cobblestone street.	“exemplary”
RoadSurfaceType_OffRoad	Road is off road.	“exemplary”
RoadSurfaceType_Flat	The road is a smooth surface road.	“exemplary”
RoadSurfaceType_Bumpy	The road is bumpy.	“exemplary”

A.2.49 Road surface probability value

Table A.123 — Signal: Road surface probability value

Name	Road surface probability value		
Description	A probability for the corresponding Road surface type (A.2.48). All classification probabilities for each entity shall sum to 100 %.		
Value type	[0…100] real value	**Unit**	%

© ISO 2020 – All rights reserved

Copyright International Organization for Standardization
Provided by IHS Markit under license with ANSI
No reproduction or networking permitted without license from IHS

Order Number: W2233726
Sold to:APTIV [222021100001] - RUTH.M.MONTANO@APTIV.COM,
Not for Resale,2020-08-07 18:02:38 UTC

A.2.50 Number of valid road surface condition classifications

Table A.124 — Signal: Number of valid road surface condition classifications

Name	Number of valid road surface condition classifications		
Description	The current Number of valid road surface condition classifications (A.2.50) of the road surface conditions. Classifications are defined by type and probability value.		
Value type	[0…] integer value	**Unit**	1

A.2.51 Road surface condition type

Table A.125 — Signal: Road surface condition type

Name	Road surface condition type		
Description	For the ego-vehicle relevant condition of the road surface.		
Value type	enumeration	**Unit**	1

Table A.126 — Enumeration: Road surface condition type – Example enumerators

Name	Description	RL enumerator
RoadSurfaceCondition_Dry	The road surface is dry.	“exemplary”
RoadSurfaceCondition_Wet	The road surface is wet.	“exemplary”
RoadSurfaceCondition_Snow	The road surface is covered with snow.	“exemplary”
RoadSurfaceCondition_Ice	The road surface is covered with ice.	“exemplary”

A.2.52 Road surface condition probability value

Table A.127 — Signal: Road surface condition probability value

Name	Road surface condition probability value		
Description	A probability for the corresponding Road surface condition type (A.2.51). All classification probabilities for each entity shall sum to 100 %.		
Value type	[0…100] real value	**Unit**	%

© ISO 2020 – All rights reserved

Copyright International Organization for Standardization
Provided by IHS Markit under license with ANSI
No reproduction or networking permitted without license from IHS
Order Number: W2233726
Sold to:APTIV [222021100001] - RUTH.M.MONTANO@APTIV.COM,
Not for Resale,2020-08-07 18:02:38 UTC

A.2.53 Road surface roughness

Table A.128 — Signal: Road surface roughness

Name	Road surface roughness		
Description	For the ego-vehicle relevant roughness or unevenness of the road surface. Additional information: The International Roughness Index (IRI) has a value range from 0 = smooth surface (equivalent to driving on a plate of glass) up to 20 mm/m (a very rough road).		
Value type	[0…] real value	**Unit**	mm/m

A.2.54 Number of valid road marking types

Table A.129 — Signal: Number of valid road marking types

Name	Number of valid road marking types		
Description	The Number of valid road marking types (A.2.54) for a road marking.		
Value type	[0…] integer value	**Unit**	1

A.2.55 Road marking type

Table A.130 — Signal: Road marking type

Name	Road marking type		
Description	Indicated the type of the road markings. Additional information: All road markings can be represented as polyline with further information of heading and width (same information as bounding box can deliver).		
Value type	enumeration	**Unit**	1

Table A.131 — Enumeration: Road marking type – Example enumerators

Name	Description	RL enumerator
RoadMarkingType_Solid	The road marking is solid. It could also be a stop line.	“exemplary”
RoadMarkingType_CentreLineDashedMarking	The centre line road marking is dashed. See ISO 11270:2014 Annex B.	“exemplary”
RoadMarkingType_EdgeLineDashedMarking	The edge line road marking is dashed. See ISO 11270:2014 Annex B.	“exemplary”
RoadMarkingType_Triangular	The road marking is a line of triangles.	“exemplary”

© ISO 2020 – All rights reserved

Copyright International Organization for Standardization
Provided by IHS Markit under license with ANSI
No reproduction or networking permitted without license from IHS

Order Number: W2233726
Sold to:APTIV [222021100001] - RUTH.M.MONTANO@APTIV.COM,
Not for Resale,2020-08-07 18:02:38 UTC

RoadMarkingType_DoubleLineSolid	The road marking has two lines and the most inner line (w.r.t. the ego-vehicle) is solid.	“exemplary”
RoadMarkingType_CentreLineDoubleLineDashed	The centre line road marking has two lines and the most inner line (w.r.t. the ego-vehicle) is dashed. See ISO 11270:2014 Annex B.	“exemplary”
RoadMarkingType_CentreLineDoubleLineDashed	The edge line road marking has two lines and the most inner line (w.r.t. the ego-vehicle) is dashed. See ISO 11270:2014 Annex B.	“exemplary”
RoadMarkingType_MultipleLineSolid	The road marking has more than two lines and the most inner line (w.r.t. the ego-vehicle) is solid.	“exemplary”
RoadMarkingType_CentreLineMultipleLineDashed	The centre line road marking has more than two lines and the most inner line (w.r.t. the ego-vehicle) is dashed. See ISO 11270:2014 Annex B.	“exemplary”
RoadMarkingType_EdgeLineMultipleLineDashed	The edge line road marking has more than two lines and the most inner line (w.r.t. the ego-vehicle) is dashed. See ISO 11270:2014 Annex B.	“exemplary”
RoadMarkingType_BottsDotsCatsEyes	The road marking consists of Botts' dots or cats' eyes.	“exemplary”
RoadMarkingType_AttentionMarker	The road marking is an attention marker e.g. US, China and Japan.	“exemplary”
RoadMarkingType_Hatched	The road marking is hatched / chevron.	“exemplary”
RoadMarkingType_Box	The road marking of a junction.	“exemplary”
RoadMarkingType_ColouredArea	The road marking is a coloured area.	“exemplary”
RoadMarkingType_Arrow	The road marking is an arrow.	“exemplary”
RoadMarkingType_ZebraCrossing	The road marking is a zebra crossing / continental / ladder.	“exemplary”
RoadMarkingType_GenericSymbol	The road marking is a generic symbol.	“exemplary”
RoadMarkingType_TrafficSignOnLane	The road marking is a traffic sign.	“exemplary”
RoadMarkingType_GenericLine	The road marking is a generic line.	“exemplary”
RoadMarkingType_ParkingArea	The road marking is a parking area.	“exemplary”
RoadMarkingType_TShapeMarkingBegin	The road marking is a parking T-shape beginning parking line.	“exemplary”
RoadMarkingType_TShapeMarkingEnd	The road marking is a parking T-shape ending parking line.	“exemplary”
RoadMarkingType_IShapeMarkingBegin	The road marking is a parking I-shape beginning parking line.	“exemplary”
RoadMarkingType_IShapeMarkingEnd	The road marking is a parking I-shape ending parking line.	“exemplary”

© ISO 2020 – All rights reserved

Copyright International Organization for Standardization
Provided by IHS Markit under license with ANSI
No reproduction or networking permitted without license from IHS

Order Number: W2233726
Sold to:APTIV [222021100001] - RUTH.M.MONTANO@APTIV.COM,
Not for Resale,2020-08-07 18:02:38 UTC

RoadMarkingType_LShapeMarkingBegin	The road marking is a parking L-shape beginning parking line.	“exemplary”
RoadMarkingType_LShapeMarkingEnd	The road marking is a parking L-shape ending parking line.	“exemplary”
RoadMarkingType_Nets	The road marking is a net, i.e. a non-stopping area.	“exemplary”

A.2.56 Road marking type – confidence

Table A.132 — Signal: Road marking type – confidence

Name	Road marking type – confidence		
Description	Confidence of the classified Road marking type (A.2.55).		
Value type	[0…100] real value	**Unit**	%

A.2.57 Arrow orientation

Table A.133 — Signal: Arrow orientation

Name	Arrow orientation		
Description	Arrow orientation (A.2.57) is the orientation of the arrow symbol on the ground plane with respect to the driving direction of the ego-vehicle Additional information: Arrow orientation (A.2.57) := 0 rad, if Road marking type (A.2.55) is not “RoadMarkingType_Arrow”.		
Value type	real value	**Unit**	rad

A.2.58 Arrow direction

Table A.134 — Signal: Arrow direction

Name	Arrow direction		
Description	Estimated direction of the displayed arrow. Additional information: “ArrowDirection_Foreward”, i.e. 0 rad points in the direction of driving straight ahead. Arrow direction (A.2.58) := “ArrowDirection_Foreward”, if Road marking type (A.2.55) is not “RoadMarkingType_Arrow”.		
Value type	enumeration	**Unit**	1

© ISO 2020 – All rights reserved

Copyright International Organization for Standardization
Provided by IHS Markit under license with ANSI
No reproduction or networking permitted without license from IHS

Order Number: W2233726
Sold to:APTIV [222021100001] - RUTH.M.MONTANO@APTIV.COM,
Not for Resale,2020-08-07 18:02:38 UTC

Table A.135 — Enumeration: Arrow direction – Example enumerators

Name	Description	RL enumerator
ArrowDirection_Foreward	Arrow has an estimated direction of 0 rad → 0°.	"exemplary"
ArrowDirection_Left	Arrow has an estimated direction of $+\frac{\pi}{2}$ rad → +90°.	"exemplary"
ArrowDirection_Right	Arrow has an estimated direction of $-\frac{\pi}{2}$ rad → −90°.	"exemplary"
ArrowDirection_StraightLeft	Arrow is straight left and has an estimated direction of $+\frac{\pi}{2}$ rad → +90°.	"exemplary"
ArrowDirection_StraightRight	Arrow is straight right and has an estimated direction of $-\frac{\pi}{2}$ rad → −90°.	"exemplary"
ArrowDirection_TurningPointLeft	Arrow has an estimated direction of $+\pi$ rad → +180°.	"exemplary"
ArrowDirection_TurningPointRight	Arrow has an estimated direction of $-\pi$ rad → −180°.	"exemplary"
ArrowDirection_45DegLeft	Arrow has an estimated direction of $+\frac{\pi}{4}$ rad → +45°.	"exemplary"
ArrowDirection_45DegRight	Arrow has an estimated direction of $-\frac{\pi}{4}$ rad → −45°.	"exemplary"
ArrowDirection_NoArrow	No arrow is present.	"exemplary"

A.2.59 Sign type

Table A.136 — Signal: Sign type

Name	Sign type		
Description	The type of the sign as main traffic sign or road marking.		
Value type	enumeration	**Unit**	1

Table A.137 — Enumeration: Sign type – Example enumerators

Name	Description	RL enumerator
SignType_StopSign	Stop sign.	"exemplary"
SignType_YieldSign	Yield sign.	"exemplary"
SignType_SpeedLimitSign	Speed limit sign.	"exemplary"
SignType_NoMainSign	No main sign, only supplementary signs.	"exemplary"
SignType_GreenArrowSign	Green arrow sign at traffic lights.	"exemplary"
SignType_HeightLimitSign	Height limit sign.	"exemplary"
SignType_EmptySign	Sign may be a changeable traffic sign without displaying a traffic sign symbol.	"exemplary"

© ISO 2020 – All rights reserved

Copyright International Organization for Standardization
Provided by IHS Markit under license with ANSI
No reproduction or networking permitted without license from IHS
Order Number: W2233726
Sold to:APTIV [222021100001] - RUTH.M.MONTANO@APTIV.COM,
Not for Resale,2020-08-07 18:02:38 UTC

A.2.60 Sign type – confidence

Table A.138 — Signal: Sign type – confidence

Name	Sign type – confidence		
Description	Confidence information for the sign type, e.g. the confidence for a stop sign as main traffic sign.		
Value type	[0…100] real value	**Unit**	%

A.2.61 Sign value

Table A.139 — Signal: Sign value

Name	Sign value		
Description	The depicted numerical value on the sign.		
Value type	real value	**Unit**	1

A.2.62 Sign value unit

Table A.140 — Signal: Sign value unit

Name	Sign value unit		
Description	The unit which the numerical value (Sign value (A.2.61)) is referring to.		
Value type	enumeration	**Unit**	1

Table A.141 — Enumeration: Sign value unit – Example enumerators

Name	Description	RL enumerator
SignValueUnit_KilometrePerHour	Kilometre per hour	“exemplary”
SignValueUnit_MilePerHour	Mile per hour	“exemplary”
SignValueUnit_Meter	Meter	“exemplary”
SignValueUnit_Kilometre	Kilometre	“exemplary”
SignValueUnit_Feet	Feet	“exemplary”
SignValueUnit_Mile	Mile	“exemplary”
SignValueUnit_MetricTon	Metric ton	“exemplary”
SignValueUnit_LongTon	Long ton	“exemplary”
SignValueUnit_ShortTon	Short ton	“exemplary”
SignValueUnit_Minute	Minute	“exemplary”
SignValueUnit_Hour	Hour	“exemplary”
SignValueUnit_Day	Day of month	“exemplary”

© ISO 2020 – All rights reserved

Copyright International Organization for Standardization
Provided by IHS Markit under license with ANSI
No reproduction or networking permitted without license from IHS

Order Number: W2233726
Sold to:APTIV [222021100001] - RUTH.M.MONTANO@APTIV.COM,
Not for Resale,2020-08-07 18:02:38 UTC

SignValueUnit_Weekday	Weekday Sunday (Sign value (A.2.61) := 0) … Saturday (Sign value (A.2.61) := 6)	“exemplary”
SignValueUnit_Percentage	Percentage	“exemplary”

A.2.63 Colour value – object level

Table A.142 — Signal: Colour value – object level

Name	Colour value – object level		
Description	Definition of the colour value(s). Number of values depends on the Colour model type (A.1.14). Additional information: E.g. “ColourType_RGB” has 3 Colour values, i.e. first value red, second value green, third value blue.		
Value type	[0…100] real value	**Unit**	%

A.2.64 Colour classification – confidence

Table A.143 — Signal: Colour classification – confidence

Name	Colour classification – confidence		
Description	Confidence of the colour.		
Value type	[0…100] real value	**Unit**	%

A.2.65 Number of valid connections

Table A.144 — Signal: Number of valid connections

Name	Number of valid connections		
Description	Number of valid connections (A.2.65) of a road marking. Each connection of a road marking uses a unique Connection ID (A.2.67).		
Value type	[0…] integer value	**Unit**	1

A.2.66 Connection type

Table A.145 — Signal: Connection type

Name	Connection type		
Description	Type of connection of at least two road markings, polylines or polynomials.		
Value type	enumeration	**Unit**	1

© ISO 2020 – All rights reserved

Copyright International Organization for Standardization
Provided by IHS Markit under license with ANSI
No reproduction or networking permitted without license from IHS

Order Number: W2233726
Sold to:APTIV [222021100001] - RUTH.M.MONTANO@APTIV.COM,
Not for Resale,2020-08-07 18:02:38 UTC

Table A.146 — Enumeration: Connection type – Example enumerators

Name	Description	RL enumerator
ConnectionType_Merge	The connection of road markings is a merge of road markings.	"exemplary"
ConnectionType_Split	The connection of road markings is a split of road markings.	"exemplary"
ConnectionType_Interconnection	The connection of road markings is an interconnection of road markings.	"exemplary"
ConnectionType_Extension	The connection of road markings is an extension of two road markings.	"exemplary"

A.2.67 Connection ID

Table A.147 — Signal: Connection ID

Name	Connection ID		
Description	A unique ID linking all connected road boundaries together. Additional information: Connection ID (A.2.67) shall be unique in each cycle and for each sensor.		
Value type	[...] integer value	**Unit**	1

A.2.68 Number of valid polynomials

Table A.148 — Signal: Number of valid polynomials

Name	Number of valid polynomials		
Description	Number of valid polynomials (A.2.68) is the number of polynomials to describe a shape.		
Value type	[0...] integer value	**Unit**	1

© ISO 2020 – All rights reserved

Copyright International Organization for Standardization
Provided by IHS Markit under license with ANSI
No reproduction or networking permitted without license from IHS

Order Number: W2233726
Sold to:APTIV [222021100001] - RUTH.M.MONTANO@APTIV.COM,
Not for Resale,2020-08-07 18:02:38 UTC

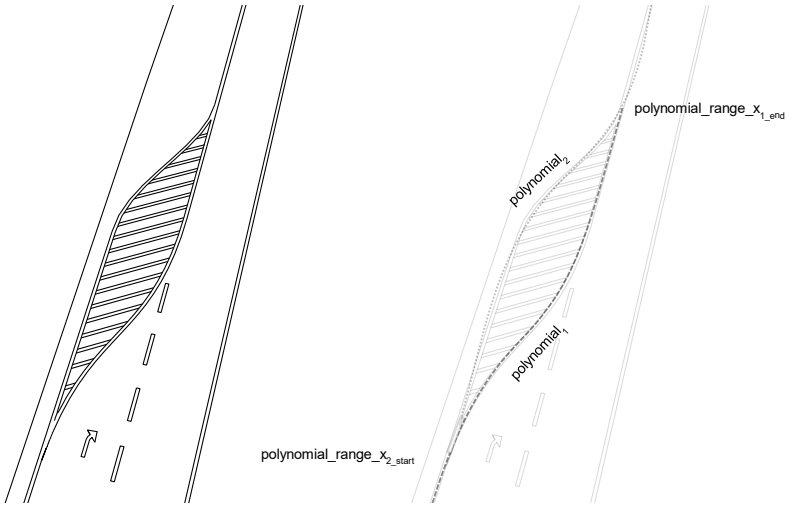

Key

Left: Real-world scene

Right: Polynomial contour representation

Figure A.7 — Polynomial contour representation example

A.2.69 Polynomial coefficient {c0, c1, c2, c3}

Table A.149 — Signal: Polynomial coefficient {c0, c1, c2, c3}

Name	Polynomial coefficient {c0, c1, c2, c3}		
Description	Calculated coefficient. Calculation method: $y = c_0 + c_1 \cdot x + c_2 \cdot x^2 + c_3 \cdot x^3$		
Value type	4D vector real value	**Unit**	(m, 1, 1/m, 1/m^2)

A.2.70 Polynomial – error

Table A.150 — Signal: Polynomial – error

Name	Polynomial – error		
Description	The error of the polynomial line. During the system design phase the unit and the error definition for Polynomial – error (A.2.70) have to be defined.		
Value type	real value	**Unit**	“during system design phase”

© ISO 2020 – All rights reserved

Copyright International Organization for Standardization
Provided by IHS Markit under license with ANSI
No reproduction or networking permitted without license from IHS

Order Number: W2233726
Sold to:APTIV [222021100001] - RUTH.M.MONTANO@APTIV.COM,
Not for Resale,2020-08-07 18:02:38 UTC

A.2.71 Polynomial range x {start, end}

Table A.151 — Signal: Polynomial range x {start, end}

Name	Polynomial range x {start, end}		
Description	Valid range of the polynomial [x Start, x End].		
Value type	2D vector real value	**Unit**	(m, m)

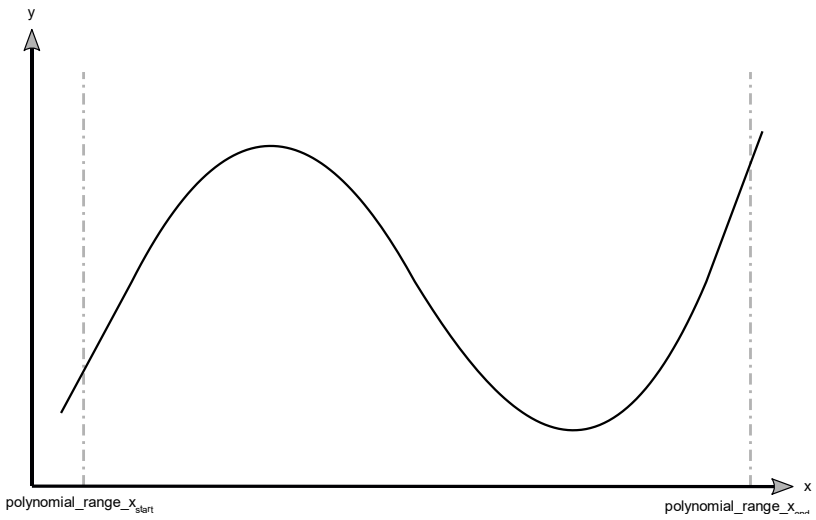

Figure A.8 — Polynomial range x {start, end} (A.2.71)

A.2.72 Width – polynomial

Table A.152 — Signal: Width – polynomial

Name	Width – polynomial		
Description	The measured width at (x Start + x End)/2. The width is in the middle of the polyline resp. the polynomial. Additional information: Optional: If a heading of the polyline resp. the polynomial is defined, the orientation is orthogonal according to the heading.		
Value type	real value	**Unit**	m

© ISO 2020 – All rights reserved

Copyright International Organization for Standardization
Provided by IHS Markit under license with ANSI
No reproduction or networking permitted without license from IHS

Order Number: W2233726
Sold to:APTIV [222021100001] - RUTH.M.MONTANO@APTIV.COM,
Not for Resale,2020-08-07 18:02:38 UTC

A.2.73 Width – polynomial – error

Table A.153 — Signal: Width – polynomial – error

Name	Width – polynomial – error		
Description	The error of the measured width at (x Start + x End)/2.		
Value type	real value	**Unit**	m

A.2.74 Width – polynomial – confidence

Table A.154 — Signal: Width – polynomial – confidence

Name	Width – polynomial – confidence		
Description	The confidence of the width for the segment.		
Value type	[0…100] real value	**Unit**	%

A.2.75 Height – polynomial

Table A.155 — Signal: Height – polynomial

Name	Height – polynomial		
Description	The measured height at (x Start + x End)/2. The height of the road boundary is added to the polyline resp. the polynomial. Additional information. The height is defined in the middle of the polynomial resp. at each vertex point of the polyline.		
Value type	real value	**Unit**	m

A.2.76 Height – polynomial – error

Table A.156 — Signal: Height – polynomial – error

Name	Height – polynomial – error		
Description	The error of the measured height at (x Start + x End)/2.		
Value type	real value	**Unit**	m

A.2.77 Height – polynomial – confidence

Table A.157 — Signal: Height – polynomial – confidence

Name	Height – polynomial – confidence		
Description	The confidence of the height for the segment.		
Value type	[0…100] real value	**Unit**	%

© ISO 2020 – All rights reserved

Copyright International Organization for Standardization
Provided by IHS Markit under license with ANSI
No reproduction or networking permitted without license from IHS

Order Number: W2233726
Sold to:APTIV [222021100001] - RUTH.M.MONTANO@APTIV.COM,
Not for Resale,2020-08-07 18:02:38 UTC

A.2.78 Number of valid data ranges

Table A.158 — Signal: Number of valid data ranges

Name	Number of valid data ranges		
Description	Number of valid data ranges (A.2.78) for the polynomial line.		
Value type	[0…] integer value	**Unit**	1

A.2.79 Supported data range x {start, end}

Table A.159 — Signal: Supported data range x {start, end}

Name	Supported data range x {start, end}		
Description	Supported range of the polynomial [x Start, x End] covered with measured points.		
Value type	2D vector real value	**Unit**	(m, m)

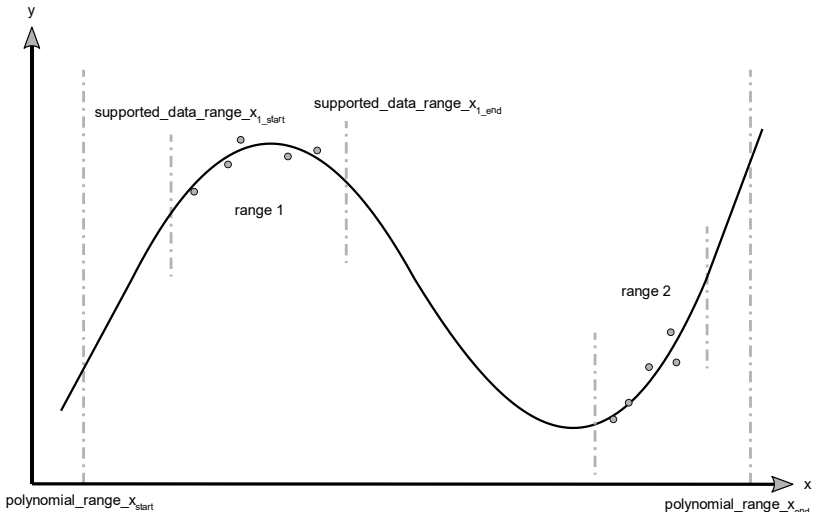

Figure A.9 — Supported data range x {start, end} (A.2.79)

A.2.80 Polyline interpolation method

Table A.160 — Signal: Polyline interpolation method

Name	Polyline interpolation method		
Description	Method for interpolating between the points.		
Value type	enumeration	**Unit**	1

© ISO 2020 – All rights reserved

Copyright International Organization for Standardization
Provided by IHS Markit under license with ANSI
No reproduction or networking permitted without license from IHS

Order Number: W2233726
Sold to:APTIV [222021100001] - RUTH.M.MONTANO@APTIV.COM,
Not for Resale,2020-08-07 18:02:38 UTC

Table A.161 — Enumeration: Polyline interpolation method – Example enumerators

Name	Description	RL enumerator
PolylineInterpolationMethod_Linear	Linear interpolation between two sequential points.	“exemplary”
PolylineInterpolationMethod_Spline	Spline interpolation between two sequential points.	“exemplary”
PolylineInterpolationMethod_Cubic	Cubic interpolation between two sequential points.	“exemplary”

A.2.81 Number of valid polylines

Table A.162 — Signal: Number of valid polylines

Name	Number of valid polylines		
Description	Number of valid polylines (A.2.81) descriptions to describe a shape with multiple polylines.		
Value type	[0…] integer value	**Unit**	1

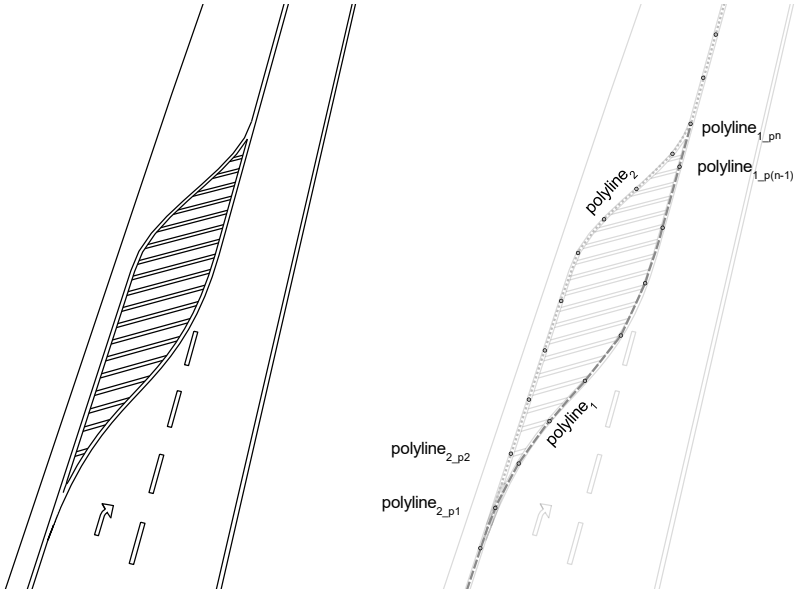

Key

Left: Real-world scene

Right: Polyline contour representation

Figure A.10 — Polyline contour representation example

© ISO 2020 – All rights reserved

Copyright International Organization for Standardization
Provided by IHS Markit under license with ANSI
No reproduction or networking permitted without license from IHS
Order Number: W2233726
Sold to:APTIV [222021100001] - RUTH.M.MONTANO@APTIV.COM,
Not for Resale,2020-08-07 18:02:38 UTC

A.2.82 Number of valid vertices

Table A.163 — Signal: Number of valid vertices

Name	Number of valid vertices		
Description	Number of valid vertices (A.2.82) of a polyline. Polyline to describe a part of the shape border with one continuous segmented line.		
Value type	[0…] integer value	**Unit**	1

A.2.83 Vertex point {x, y, z}

Table A.164 — Signal: Vertex point {x, y, z}

Name	Vertex point {x, y, z}		
Description	Measured longitudinal, lateral and vertical distance of the vertex.		
Value type	3D vector real value	**Unit**	(m, m, m)

A.2.84 Vertex point – error {x, y, z}

Table A.165 — Signal: Vertex point – error {x, y, z}

Name	Vertex point – error {x, y, z}		
Description	Measured longitudinal, lateral and vertical distance of the vertex error.		
Value type	3D vector real value	**Unit**	(m, m, m)

A.2.85 Vertex point – confidence {x, y, z}

Table A.166 — Signal: Vertex point – confidence {x, y, z}

Name	Vertex point – confidence {x, y, z}		
Description	Measured longitudinal, lateral and vertical distance of the vertex confidence.		
Value type	[0…100] 3D vector real value	**Unit**	(%, %, %)

A.2.86 Width – vertex

Table A.167 — Signal: Width – vertex

Name	Width – vertex		
Description	Measured width of the vertex at the middle of the vertex. Additional information: The value for the last vertex keeps the value of the previous vertex.		
Value type	real value	**Unit**	m

© ISO 2020 – All rights reserved

Copyright International Organization for Standardization
Provided by IHS Markit under license with ANSI
No reproduction or networking permitted without license from IHS

Order Number: W2233726
Sold to:APTIV [222021100001] - RUTH.M.MONTANO@APTIV.COM,
Not for Resale,2020-08-07 18:02:38 UTC

A.2.87 Width – vertex – error

Table A.168 — Signal: Width – vertex – error

Name	Width – vertex – error		
Description	Error of the measured width at the middle of the vertex. Additional information: The value for the last vertex keeps the value of the previous vertex.		
Value type	real value	**Unit**	m

A.2.88 Width – vertex – confidence

Table A.169 — Signal: Width – vertex – confidence

Name	Width – vertex – confidence		
Description	Confidence of the width of the vertex. Additional information: The value for the last vertex keeps the value of the previous vertex.		
Value type	[0…100] real value	**Unit**	%

A.2.89 Height – vertex

Table A.170 — Signal: Height – vertex

Name	Height – vertex		
Description	Measured height of the vertex at the middle of the vertex. Additional information: The value for the last vertex keeps the value of the previous vertex.		
Value type	real value	**Unit**	m

A.2.90 Height – vertex – error

Table A.171 — Signal: Height – vertex – error

Name	Height – vertex – error		
Description	Error of the measured height at the middle of the vertex. Additional information: The value for the last vertex keeps the value of the previous vertex.		
Value type	real value	**Unit**	m

© ISO 2020 – All rights reserved

Copyright International Organization for Standardization
Provided by IHS Markit under license with ANSI
No reproduction or networking permitted without license from IHS

Order Number: W2233726
Sold to:APTIV [222021100001] - RUTH.M.MONTANO@APTIV.COM,
Not for Resale,2020-08-07 18:02:38 UTC

A.2.91 Height – vertex – confidence

Table A.172 — Signal: Height – vertex – confidence

Name	Height – vertex – confidence		
Description	Confidence of the height of the vertex. Additional information: The value for the last vertex keeps the value of the previous vertex.		
Value type	[0…100] real value	**Unit**	%

A.2.92 Number of valid road boundary types

Table A.173 — Signal: Number of valid road boundary types

Name	Number of valid road boundary types		
Description	The Number of valid road boundary types (A.2.92) for a road boundary.		
Value type	[0…] integer value	**Unit**	1

A.2.93 Road boundary type

Table A.174 — Signal: Road boundary type

Name	Road boundary type		
Description	Indicated the type of the road boundary.		
Value type	enumeration	**Unit**	1

Table A.175 — Enumeration: Road boundary type – Example enumerators

Name	Description	RL enumerator
RoadBoundaryType_Guardrail	The road boundary is a guardrail.	“exemplary”
RoadBoundaryType_Fence	The road boundary is a fence.	“exemplary”
RoadBoundaryType_Wand	The road boundary is a wand, a wall, a building, etc.	“exemplary”
RoadBoundaryType_Barrier	The road boundary is a barrier.	“exemplary”
RoadBoundaryType_TensionCableSystem	The road boundary is a tension cable system.	“exemplary”
RoadBoundaryType_RoadEdge	The road boundary is a road edge e.g. grass, vegetation, sand, gravel, soil, etc.	“exemplary”
RoadBoundaryType_Curb	The road boundary is a curb stone.	“exemplary”
RoadBoundaryType_UnclassifiedElevated	The road boundary is an unclassified elevated structure.	“exemplary”

© ISO 2020 – All rights reserved

Copyright International Organization for Standardization
Provided by IHS Markit under license with ANSI
No reproduction or networking permitted without license from IHS

Order Number: W2233726
Sold to:APTIV [222021100001] - RUTH.M.MONTANO@APTIV.COM,
Not for Resale,2020-08-07 18:02:38 UTC

A.2.94 Road boundary type – confidence

Table A.176 — Signal: Road boundary type – confidence

Name	Road boundary type – confidence		
Description	Confidence of the classified road boundary type.		
Value type	[0…100] real value	**Unit**	%

A.2.95 Lane boundary role

Table A.177 — Signal: Lane boundary role

Name	Lane boundary role		
Description	Definition of the road boundary role w.r.t. the ego-vehicle lane.		
Value type	enumeration	**Unit**	1

Table A.178 — Enumeration: Lane boundary role – Example enumerators

Name	Description	RL enumerator
LaneBoundaryRole_HostLeft	The lane boundary role is left to the ego-vehicle.	“exemplary”
LaneBoundaryRole_HostRight	The lane boundary role is right to the ego-vehicle.	“exemplary”
LaneBoundaryRole_AdjacentLeft	The lane boundary role is to the left adjacent ego-vehicle lane.	“exemplary”
LaneBoundaryRole_AdjacentRight	The lane boundary role is to the right adjacent ego-vehicle lane.	“exemplary”
LaneBoundaryRole_NotValid	The road boundary is not valid as lane boundary.	“exemplary”

A.2.96 Lane boundary role – confidence

Table A.179 — Signal: Lane boundary role – confidence

Name	Lane boundary role – confidence		
Description	Confidence of the Lane boundary role (A.2.95).		
Value type	[0…100] real value	**Unit**	%

© ISO 2020 – All rights reserved

Copyright International Organization for Standardization
Provided by IHS Markit under license with ANSI
No reproduction or networking permitted without license from IHS

Order Number: W2233726
Sold to:APTIV [222021100001] - RUTH.M.MONTANO@APTIV.COM,
Not for Resale,2020-08-07 18:02:38 UTC

A.2.97 Number of valid general landmark classifications

Table A.180 — Signal: Number of valid general landmark classifications

Name	Number of valid general landmark classifications		
Description	The current Number of valid general landmark classifications (A.2.97) of the general landmark classifications. Classifications are defined by type and probability value.		
Value type	[0…] integer value	**Unit**	1

A.2.98 General landmark classification type

Table A.181 — Signal: General landmark classification type

Name	General landmark classification type		
Description	Classification of the general landmark.		
Value type	enumeration	**Unit**	1

Table A.182 — Enumeration: General landmark classification type – Example enumerators

Name	Description	RL enumerator
GeneralLandmarkClassificationType_Bridge	Bridge as general landmark.	“exemplary”
GeneralLandmarkClassificationType_Beacon	Beacon as general landmark.	“exemplary”
GeneralLandmarkClassificationType_Cone	Cone as general landmark.	“exemplary”
GeneralLandmarkClassificationType_Barrel	Barrel as general landmark.	“exemplary”
GeneralLandmarkClassificationType_GuidePost	Guide post as general landmark.	“exemplary”
GeneralLandmarkClassificationType_LampPost	Lamp post as general landmark.	“exemplary”
GeneralLandmarkClassificationType_VerticalStructure	Vertical structure as general landmark.	“exemplary”
GeneralLandmarkClassificationType_OverheadObject	Overhead object as general landmark.	“exemplary”
GeneralLandmarkClassificationType_RectangularStructure	Rectangular structure as general landmark.	“exemplary”
GeneralLandmarkClassificationType_Tunnel	Tunnel as general landmark.	“exemplary”
GeneralLandmarkClassificationType_Reflector	Reflector as general landmark.	“exemplary”

© ISO 2020 – All rights reserved

Copyright International Organization for Standardization
Provided by IHS Markit under license with ANSI
No reproduction or networking permitted without license from IHS
Order Number: W2233726
Sold to:APTIV [222021100001] - RUTH.M.MONTANO@APTIV.COM,
Not for Resale,2020-08-07 18:02:38 UTC

A.2.99 General landmark classification probability value

Table A.183 — Signal: General landmark classification probability value

Name	General landmark classification probability value		
Description	A probability for the corresponding General landmark classification type (A.2.98). All classification probabilities for each entity shall sum to 100 %.		
Value type	[0…100] real value	**Unit**	%

A.2.100 General landmark classification confidence

Table A.184 — Signal: General landmark classification confidence

Name	General landmark classification confidence		
Description	Confidence information for the general landmark classification.		
Value type	[0…100] real value	**Unit**	%

A.2.101 Orientation – object level {vertical}

Table A.185 — Signal: Orientation – object level {vertical}

Name	Orientation – object level {vertical}		
Description	The rotation of the static object at the given [x, y, z] coordinates around the vertical axis of the object.		
Value type	1D vector real value	**Unit**	rad

A.2.102 Orientation – object level – error {vertical}

Table A.186 — Signal: Orientation – object level – error {vertical}

Name	Orientation – object level – error {vertical}		
Description	The error information for the static object vertical orientation.		
Value type	1D vector real value	**Unit**	rad

A.2.103 Sign geometry

Table A.187 — Signal: Sign geometry

Name	Sign geometry		
Description	The shape of the sign.		
Value type	enumeration	**Unit**	1

© ISO 2020 – All rights reserved

Copyright International Organization for Standardization
Provided by IHS Markit under license with ANSI
No reproduction or networking permitted without license from IHS

Order Number: W2233726
Sold to:APTIV [222021100001] - RUTH.M.MONTANO@APTIV.COM,
Not for Resale,2020-08-07 18:02:38 UTC

Table A.188 — Enumeration: Sign geometry – Example enumerators

Name	Description	RL enumerator
SignGeometry_Circle	Circle shape as sign geometry.	“exemplary”
SignGeometry_TriangleTop	Triangle with tip pointing downwards as sign geometry.	“exemplary”
SignGeometry_TriangleDown	Triangle with tip pointing upwards as sign geometry.	“exemplary”
SignGeometry_Square	Square shape as sign geometry.	“exemplary”
SignGeometry_Pole	Pole shape as sign geometry.	“exemplary”
SignGeometry_Rectangle	Rectangle shape as sign geometry.	“exemplary”
SignGeometry_Plate	Plate with multiple traffic information.	“exemplary”
SignGeometry_Diamond	Diamond shape as sign geometry.	“exemplary”
SignGeometry_ArrowLeft	Arrow left five edge shape as sign geometry.	“exemplary”
SignGeometry_ArrowRight	Arrow right five edge shape as sign geometry.	“exemplary”
SignGeometry_Octagon	Octagon shape as sign geometry.	“exemplary”

A.2.104 Variable message sign

Table A.189 — Signal: Variable message sign

Name	Variable message sign		
Description	Describing whether or not the message of the sign is variable/changeable, static or if that information is not available.		
Value type	enumeration	**Unit**	1

Table A.190 — Enumeration: Variable message sign – Example enumerators

Name	Description	RL enumerator
VariableMessageSign_Static	Message sign is no variable message sign.	“exemplary”
VariableMessageSign_Variable	Message sign is a variable message sign.	“exemplary”
VariableMessageSign_NotAvailable	Message sign is out of service.	“exemplary”

A.2.105 Out of service

Table A.191 — Signal: Out of service

Name	Out of service		
Description	Traffic sign is out of service, e.g. the symbol is crossed out.		
Value type	enumeration	**Unit**	1

© ISO 2020 – All rights reserved

Copyright International Organization for Standardization
Provided by IHS Markit under license with ANSI
No reproduction or networking permitted without license from IHS

Order Number: W2233726
Sold to:APTIV [222021100001] - RUTH.M.MONTANO@APTIV.COM,
Not for Resale,2020-08-07 18:02:38 UTC

Table A.192 — Enumeration: Out of service – Example enumerators

Name	Description	RL enumerator
OutOfService_InService	Message sign is in service.	“exemplary”
OutOfService_FullOutOfService	Message sign is full out of service.	“exemplary”
OutOfService_PartlyOutOfService	Part of the message sign is out of service.	“exemplary”
OutOfService_OutOfView	Message sign is rotated.	“exemplary”

A.2.106 Lane relevance

Table A.193 — Signal: Lane relevance

Name	Lane relevance		
Description	Information if the sign is relevant for the ego-vehicle’s lane, the nearest lane to the ego-vehicle or other relevant lanes.		
Value type	enumeration	**Unit**	1

Table A.194 — Enumeration: Lane relevance – Example enumerators

Name	Description	RL enumerator
LaneRelevance_OnTrack	Relevant on track of ego-vehicle.	“exemplary”
LaneRelevance_NextLaneLeft	Relevant for the next lane to the ego-vehicle on the left site.	“exemplary”
LaneRelevance_NextLaneRight	Relevant for the next lane to the ego-vehicle on the right site.	“exemplary”
LaneRelevance_NextNextLaneLeft	Relevant for the second next lane to the ego-vehicle on the left site.	“exemplary”
LaneRelevance_NextNextLaneRight	Relevant for the second next lane to the ego-vehicle on the right site.	“exemplary”
LaneRelevance_OnTrackAndNextLaneLeft	Relevant on track of ego-vehicle and the next left lane.	“exemplary”
LaneRelevance_OnTrackAndNextLaneRight	Relevant on track of ego-vehicle and the next right lane.	“exemplary”
LaneRelevance_MostLeftLane	Relevant for the leftest lane.	“exemplary”
LaneRelevance_MostRightLane	Relevant for the rightest lane.	“exemplary”
LaneRelevance_AllLanes	Relevant for all lanes, lane to the right and left site and on track.	“exemplary”
LaneRelevance_OtherLane	Relevant for another far lane.	“exemplary”

© ISO 2020 – All rights reserved

Copyright International Organization for Standardization
Provided by IHS Markit under license with ANSI
No reproduction or networking permitted without license from IHS

Order Number: W2233726
Sold to:APTIV [222021100001] - RUTH.M.MONTANO@APTIV.COM,
Not for Resale,2020-08-07 18:02:38 UTC

A.2.107 Lane relevance – confidence

Table A.195 — Signal: Lane relevance – confidence

Name	Lane relevance – confidence		
Description	Confidence information for the lane relevance.		
Value type	[0…100] real value	**Unit**	%

A.2.108 Number of valid traffic supplementary signs

Table A.196 — Signal: Number of valid traffic supplementary signs

Name	Number of valid traffic supplementary signs		
Description	The current Number of valid traffic supplementary signs (A.2.108) in the traffic sign entity. Additional information: Maximum number of entries could be limited. The entries in the array may or may not be sorted.		
Value type	[0…] integer value	**Unit**	1

A.2.109 Supplementary sign type

Table A.197 — Signal: Supplementary sign type

Name	Supplementary sign type		
Description	The type of the sign.		
Value type	enumeration	**Unit**	1

Table A.198 — Enumeration: Supplementary sign type – Example enumerators

Name	Description	RL enumerator
SupplementarySignType_ValidInformationBegin	Begin of valid zone.	“exemplary”
SupplementarySignType_ValidInformationEnd	End of valid zone.	“exemplary”
SupplementarySignType_Frost	Frost sign.	“exemplary”
SupplementarySignType_WetRoad	Wet road sign.	“exemplary”
SupplementarySignType_Distance	Distance information.	“exemplary”
SupplementarySignType_Limitation	Limitation information.	“exemplary”

© ISO 2020 – All rights reserved

Copyright International Organization for Standardization
Provided by IHS Markit under license with ANSI
No reproduction or networking permitted without license from IHS

Order Number: W2233726
Sold to:APTIV [222021100001] - RUTH.M.MONTANO@APTIV.COM,
Not for Resale,2020-08-07 18:02:38 UTC

A.2.110 Supplementary sign type – confidence

Table A.199 — Signal: Supplementary sign type – confidence

Name	Supplementary sign type – confidence		
Description	Confidence information for the supplementary sign type.		
Value type	[0…100] real value	**Unit**	%

A.2.111 Relative position

Table A.200 — Signal: Relative position

Name	Relative position		
Description	The relative position of the supplemental sign w.r.t. its main sign.		
Value type	enumeration	**Unit**	1

Table A.201 — Enumeration: Relative position – Example enumerators

Name	Description	RL enumerator
RelativePosition_Above	Supplementary sign is above the main sign.	“exemplary”
RelativePosition_Below	Supplementary sign is below the main sign.	“exemplary”
RelativePosition_Left	Supplementary sign is left of the main sign.	“exemplary”
RelativePosition_Right	Supplementary sign is right of the main sign.	“exemplary”

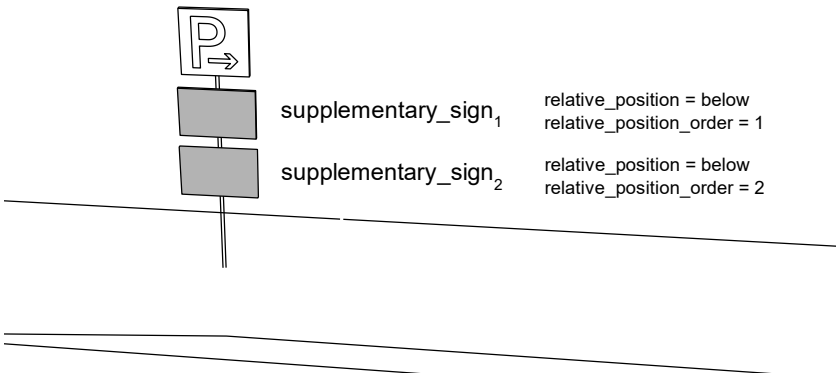

Figure A.11 — Relative position (A.2.111) and Relative position order (A.2.112)

Copyright International Organization for Standardization
Provided by IHS Markit under license with ANSI
No reproduction or networking permitted without license from IHS
Order Number: W2233726
Sold to:APTIV [222021100001] - RUTH.M.MONTANO@APTIV.COM,
Not for Resale,2020-08-07 18:02:38 UTC

A.2.112 Relative position order

Table A.202 — Signal: Relative position order

Name	Relative position order		
Description	The relative order of a supplementary sign w.r.t. the main sign position. The value 1 defines the nearest position of the supplementary sign to the main sign.		
Value type	integer value	**Unit**	1

A.2.113 Structure light type

Table A.203 — Signal: Structure light type

Name	Structure light type		
Description	The traffic light can have different shapes.		
Value type	enumeration	**Unit**	1

Table A.204 — Enumeration: Structure light type – Example enumerators

Name	Description	RL enumerator
StructureLightType_Vertical3	Three light sources vertical.	“exemplary”
StructureLightType_Horizontal3	Three light sources horizontal.	“exemplary”
StructureLightType_DogHouse	Multi light sources.	“exemplary”

A.2.114 Structure light type – confidence

Table A.205 — Signal: Structure light type – confidence

Name	Structure light type – confidence		
Description	Confidence information of the light’s structure type.		
Value type	[0…100] real value	**Unit**	%

A.2.115 Minimum visibility distance

Table A.206 — Signal: Minimum visibility distance

Name	Minimum visibility distance		
Description	Minimum distance to the traffic light until the traffic light is still in the FOV of the sensor.		
Value type	[0…] real value	**Unit**	m

© ISO 2020 – All rights reserved

Copyright International Organization for Standardization
Provided by IHS Markit under license with ANSI
No reproduction or networking permitted without license from IHS

Order Number: W2233726
Sold to:APTIV [222021100001] - RUTH.M.MONTANO@APTIV.COM,
Not for Resale,2020-08-07 18:02:38 UTC

A.2.116 Total number of traffic light spots

Table A.207 — Signal: Total number of traffic light spots

Name	Total number of traffic light spots		
Description	Estimation of Total number of traffic light spots (A.2.116) which are part of this structure. Additional information: This signal is considered to be an estimation since turned-off spots are barely visible (esp. at night) and therefore hard to detect.		
Value type	[0…] integer value	**Unit**	1

A.2.117 Total number of traffic light spots – confidence

Table A.208 — Signal: Total number of traffic light spots – confidence

Name	Total number of traffic light spots – confidence		
Description	Confidence information for the Total number of traffic light spots (A.2.116).		
Value type	[0…100] real value	**Unit**	%

A.2.118 Number of valid traffic light spots

Table A.209 — Signal: Number of valid traffic light spots

Name	Number of valid traffic light spots		
Description	The current Number of valid traffic light spots (A.2.118) of the traffic light entity. Additional information: Maximum number of entries could be limited. The entries in the array may or may not be sorted.		
Value type	[0…] integer value	**Unit**	1

A.2.119 Number of valid colour classifications

Table A.210 — Signal: Number of valid colour classifications

Name	Number of valid colour classifications		
Description	The current Number of valid colour classifications (A.2.119) of the colours. Classifications are defined by type and probability value.		
Value type	[0…] integer value	**Unit**	1

Copyright International Organization for Standardization
Provided by IHS Markit under license with ANSI
No reproduction or networking permitted without license from IHS
Order Number: W2233726
Sold to:APTIV [222021100001] - RUTH.M.MONTANO@APTIV.COM,
Not for Resale,2020-08-07 18:02:38 UTC

A.2.120 Colour type

Table A.211 — Signal: Colour type

Name	Colour type		
Description	Colour of light spot.		
Value type	enumeration	**Unit**	1

Table A.212 — Enumeration: Colour type – Example enumerators

Name	Description	RL enumerator
ColourType_Red	The spot colour is red.	“exemplary”
ColourType_Yellow	The spot colour is yellow.	“exemplary”
ColourType_Green	The spot colour is green.	“exemplary”
ColourType_White	The spot colour is white.	“exemplary”

A.2.121 Colour probability value

Table A.213 — Signal: Colour probability value

Name	Colour probability value		
Description	A probability for the corresponding Colour type (A.2.120). All classification probabilities for each entity shall sum to 100 %.		
Value type	[0…100] real value	**Unit**	%

A.2.122 Colour – confidence

Table A.214 — Signal: Colour – confidence

Name	Colour – confidence		
Description	Confidence information for the Colour type (A.2.120).		
Value type	[0…100] real value	**Unit**	%

A.2.123 Number of valid light mode classifications

Table A.215 — Signal: Number of valid light mode classifications

Name	Number of valid light mode classifications		
Description	The current Number of valid light mode classifications (A.2.123) of the light modes. Classifications are defined by type and probability value.		
Value type	[0…] integer value	**Unit**	1

© ISO 2020 – All rights reserved

Copyright International Organization for Standardization
Provided by IHS Markit under license with ANSI
No reproduction or networking permitted without license from IHS

Order Number: W2233726
Sold to:APTIV [222021100001] - RUTH.M.MONTANO@APTIV.COM,
Not for Resale,2020-08-07 18:02:38 UTC

A.2.124 Light mode type

Table A.216 — Signal: Light mode type

Name	Light mode type		
Description	The light's mode.		
Value type	enumeration	**Unit**	1

Table A.217 — Enumeration: Light mode type – Example enumerators

Name	Description	RL enumerator
LightModeType_Continuous	Light source is continuous on.	"exemplary"
LightModeType_Blinking	One light source is blinking > 1 Hz.	"exemplary"
LightModeType_TurnedOff	Light source is turned off.	"exemplary"
LightModeType_Counting	Light source with counting.	"exemplary"

A.2.125 Light mode probability value

Table A.218 — Signal: Light mode probability value

Name	Light mode probability value		
Description	A probability for the corresponding Light mode type (A.2.124). All classification probabilities for each entity shall sum to 100 %.		
Value type	[0…100] real value	**Unit**	%

A.2.126 Light mode – confidence

Table A.219 — Signal: Light mode – confidence

Name	Light mode – confidence		
Description	Confidence information of the Light mode type (A.2.124).		
Value type	[0…100] real value	**Unit**	%

A.2.127 Light shape

Table A.220 — Signal: Light shape

Name	Light shape		
Description	The light's shape.		
Value type	enumeration	**Unit**	1

© ISO 2020 – All rights reserved

Copyright International Organization for Standardization
Provided by IHS Markit under license with ANSI
No reproduction or networking permitted without license from IHS

Order Number: W2233726
Sold to:APTIV [222021100001] - RUTH.M.MONTANO@APTIV.COM,
Not for Resale,2020-08-07 18:02:38 UTC

Table A.221 — Enumeration: Light shape – Example enumerators

Name	Description	RL enumerator
LightShape_NoShape	No additional shape.	“exemplary”
LightShape_ArrowStraightAhead	Arrow straight ahead shape.	“exemplary”
LightShape_ArrowLeft	Arrow left shape.	“exemplary”
LightShape_ArrowDiagLeft	Arrow diagonal left shape.	“exemplary”
LightShape_ArrowStraightAheadLeft	Arrow straight ahead and arrow left shape.	“exemplary”
LightShape_ArrowRight	Arrow right shape.	“exemplary”
LightShape_ArrowDiagRight	Arrow diagonal right shape.	“exemplary”
LightShape_ArrowStraightAheadRight	Arrow straight ahead and arrow right shape.	“exemplary”
LightShape_ArrowLeftRight	Arrow left and arrow right shape.	“exemplary”
LightShape_ArrowDown	Arrow down shape.	“exemplary”
LightShape_ArrowDownLeft	Arrow U-turn left shape.	“exemplary”
LightShape_ArrowDownRight	Arrow U-turn right shape.	“exemplary”
LightShape_Cross	Cross figure.	“exemplary”
LightShape_Pedestrian	Pedestrian figure.	“exemplary”
LightShape_Walk	Text “walk” figure.	“exemplary”
LightShape_DontWalk	Text “don’t walk” figure.	“exemplary”
LightShape_Bicycle	Bicycle figure.	“exemplary”
LightShape_PedestrianAndBicycle	Pedestrian and bicycle figure.	“exemplary”
LightShape_CountdownSecond	Countdown in seconds figure. Signal Light shape – value (A.2.129) contains the value in s.	“exemplary”
LightShape_CountdownPercent	Countdown in percent figure. Signal Light shape – value (A.2.129) contains the value in %.	“exemplary”
LightShape_Tram	Tram figure.	“exemplary”
LightShape_Bus	Bus figure.	“exemplary”
LightShape_BusAndTram	Bus and Tram figure.	“exemplary”

A.2.128 Light shape – confidence

Table A.222 — Signal: Light shape – confidence

Name	Light shape – confidence		
Description	Confidence information of the Light shape (A.2.127).		
Value type	[0…100] real value	**Unit**	%

© ISO 2020 – All rights reserved

Copyright International Organization for Standardization
Provided by IHS Markit under license with ANSI
No reproduction or networking permitted without license from IHS
Order Number: W2233726
Sold to:APTIV [222021100001] - RUTH.M.MONTANO@APTIV.COM,
Not for Resale,2020-08-07 18:02:38 UTC

A.2.129 Light shape – value

Table A.223 — Signal: Light shape – value

Name	Light shape – value		
Description	Additional countdown value of the Light shape (A.2.127). Additional information: The value meaning and the value unit depends on the enumerator of Light shape (A.2.127).		
Value type	[0…] integer value	**Unit**	"defined by enumerator of Light shape (A.2.127)"

A.3 Feature level entity signals

In this clause signals are defined for the entities of the Camera feature interface (8.2) and the Ultrasonic feature interface (8.3). These interfaces are located at FLI. No FLI for radar or lidar sensors is defined.

A.3.1 Feature existence probability

Table A.224 — Signal: Feature existence probability

Name	Feature existence probability		
Description	Feature existence probability (A.3.1) of the feature, based on history. Additional information: Use as confidence measure where a low value means less confidence and a high value indicates strong confidence.		
Value type	[0…100] real value	**Unit**	%

A.3.2 Feature ID

Table A.225 — Signal: Feature ID

Name	Feature ID		
Description	Unique identification number of the feature within the feature list. Additional information: Feature ID (A.3.2) is only unique for each sensor's feature entities of FLI within one measurement cycle.		
Value type	[0…] integer value	**Unit**	1

© ISO 2020 – All rights reserved

Copyright International Organization for Standardization
Provided by IHS Markit under license with ANSI
No reproduction or networking permitted without license from IHS
Order Number: W2233726
Sold to:APTIV [222021100001] - RUTH.M.MONTANO@APTIV.COM,
Not for Resale,2020-08-07 18:02:38 UTC

A.3.3 Object ID reference – feature level

Table A.226 — Signal: Object ID reference – feature level

Name	Object ID reference – feature level		
Description	Object ID (A.2.1) of the object to which this feature is associated to; invalid = "no associated object" e.g. first feature cycle. Additional information: Refers to an object (e.g. Potentially moving objects) with the highest probability. A feature can reference internal objects with a unique Object ID (A.2.1) without sending the object on one of the OLIs. Optimization (B.3.2): Mapping of objects (Object ID (A.2.1)) and features (Object ID reference – feature level (A.3.3)) could be provided in a separate interface. Object ID reference – feature level (A.3.3) could reference entities of the OLI or entities which are used internal by the sensor.		
Value type	[0…] integer value	**Unit**	1

A.3.4 Time stamp difference – feature level

Table A.227 — Signal: Time stamp difference – feature level

Name	Time stamp difference – feature level		
Description	Each feature entity can have an individual time stamp, i.e. a time stamp difference to the Time stamp – predicted (A.1.4.1). Additional information: Time stamp of the feature = Time stamp – predicted (A.1.4.1) of the feature list header + Time stamp difference – feature level (A.3.4) of the feature.		
Value type	real value	**Unit**	s

A.3.5 Observation – feature level

Table A.228 — Signal: Observation – feature level

Name	Observation – feature level		
Description	A vector containing the last n cycles in which this feature has been currently tracked. Additional information: Possible exemplary implementation: 32 element enumeration field representing the last 32 cycles, "Observation_True" := measured, "Observation_False" := predicted/not measured. Observation – feature level (A.3.5) is limited in duration. The number of elements of the enumeration field (n) will be defined during system design phase.		
Value type	nD vector enumeration	**Unit**	(1, …, 1)

© ISO 2020 – All rights reserved

Copyright International Organization for Standardization
Provided by IHS Markit under license with ANSI
No reproduction or networking permitted without license from IHS

Order Number: W2233726
Sold to:APTIV [222021100001] - RUTH.M.MONTANO@APTIV.COM,
Not for Resale,2020-08-07 18:02:38 UTC

Table A.229 — Enumeration: Observation – feature level – Example enumerators

Name	Description	RL enumerator
Observation_True	The feature was observed in the cycle.	“exemplary”
Observation_False	The feature was not observed in the cycle. It may be predicted.	“exemplary”

A.3.6 Shape type – feature level

Table A.230 — Signal: Shape type – feature level

Name	Shape type – feature level		
Description	Shape of the shape segment's borderline. Additional information: The shape defines how the referenced points are connected. The interpretation of the enumerators will be defined during the system design phase.		
Value type	enumeration	**Unit**	1

Table A.231 — Enumeration: Shape type – feature level – Example enumerators

Name	Description	RL enumerator
ShapeType_Point	Shape is a point.	“exemplary”
ShapeType_Box	Shape is a box (2 or 3 points).	“exemplary”
ShapeType_Ellipse	Shape is an ellipse (2 or 3 points).	“exemplary”
ShapeType_Polygon	Shape is a polygon (3 or more points).	“exemplary”
ShapeType_Polyline	Shape is a polyline (2 or more points).	“exemplary”
ShapeType_PointCloud	Shape is a point cloud (2 or more points).	“exemplary”

A.3.7 Number of valid shape classifications – feature level

Table A.232 — Signal: Number of valid shape classifications – feature level

Name	Number of valid shape classifications – feature level		
Description	The current Number of valid shape classifications – feature level (A.3.7) of the shape. Classifications are defined by type and probability value.		
Value type	[0…] integer value	**Unit**	1

© ISO 2020 – All rights reserved

Copyright International Organization for Standardization
Provided by IHS Markit under license with ANSI
No reproduction or networking permitted without license from IHS
Order Number: W2233726
Sold to:APTIV [222021100001] - RUTH.M.MONTANO@APTIV.COM,
Not for Resale,2020-08-07 18:02:38 UTC

A.3.8 Shape classification type – feature level

Table A.233 — Signal: Shape classification type – feature level

Name	Shape classification type – feature level		
Description	The classification type for the shape.		
Value type	enumeration	**Unit**	1

Table A.234 — Enumeration: Shape classification type – feature level – Example enumerators

Name	Description	RL enumerator
ShapeClassificationType_Background	Shape is classified as background entity.	“exemplary”
ShapeClassificationType_Foreground	Shape is classified as foreground entity.	“exemplary”
ShapeClassificationType_Flat	Shape is classified as flat entity.	“exemplary”
ShapeClassificationType_Upright	Shape is classified as upright entity.	“exemplary”
ShapeClassificationType_Ground	Shape is classified as ground entity.	“exemplary”
ShapeClassificationType_Building	Shape is classified as building entity.	“exemplary”
ShapeClassificationType_Vegetation	Shape is classified as vegetation entity.	“exemplary”
ShapeClassificationType_Road	Shape is classified as road entity.	“exemplary”
ShapeClassificationType_NonRoad	Shape is classified as non-road entity.	“exemplary”
ShapeClassificationType_Sidewalk	Shape is classified as sidewalk entity.	“exemplary”
ShapeClassificationType_Pedestrian	Shape is classified as pedestrian entity.	“exemplary”
ShapeClassificationType_Vehicle	Shape is classified as vehicle entity.	“exemplary”
ShapeClassificationType_TrafficSign	Shape is classified as traffic sign entity.	“exemplary”
ShapeClassificationType_PedestrianFront	Shape is classified as pedestrian front-view entity.	“exemplary”
ShapeClassificationType_PedestrianSide	Shape is classified as pedestrian side-view entity.	“exemplary”
ShapeClassificationType_PedestrianRear	Shape is classified as pedestrian rear-view entity.	“exemplary”

A.3.9 Shape classification probability value

Table A.235 — Signal: Shape classification probability value

Name	Shape classification probability value		
Description	Classification probability of the shape segment's possible content.		
Value type	[0…100] real value	**Unit**	%

© ISO 2020 – All rights reserved

--`,,,`,,,,`,`,`,`,`,`,`,,`,-`-`,`,,`,,`,`---
Copyright International Organization for Standardization
Provided by IHS Markit under license with ANSI
No reproduction or networking permitted without license from IHS
Order Number: W2233726
Sold to:APTIV [222021100001] - RUTH.M.MONTANO@APTIV.COM,
Not for Resale,2020-08-07 18:02:38 UTC

A.3.10 Colour value – feature level

Table A.236 — Signal: Colour value – feature level

Name	Colour value – feature level		
Description	Definition of the colour value(s). Number of values depends on the Colour model type (A.1.14). Additional information: E.g. "ColourModelType_RGB" has 3 Colour values, i.e. first value red, second value green, third value blue.		
Value type	[0…100] real value	**Unit**	%

A.3.11 Colour probability – feature level

Table A.237 — Signal: Colour probability – feature level

Name	Colour probability – feature level		
Description	Colour probability – feature level (A.3.11) gives the proportion of the area with the specified colour.		
Value type	[0…100] real value	**Unit**	%

A.3.12 Number of valid shape points – feature level

Table A.238 — Signal: Number of valid shape points – feature level

Name	Number of valid shape points – feature level		
Description	The current Number of valid shape points – feature level (A.3.12) of the shape. Points are referenced by the feature shape. Additional information: Number of valid shape points – feature level (A.3.12) >= 1.		
Value type	[0…] integer value	**Unit**	1

A.3.13 Point existence probability – feature level

Table A.239 — Signal: Point existence probability – feature level

Name	Point existence probability – feature level		
Description	Existence probability of the point. Each point is only used by one shape (maybe one shape is sent in several entities with different shape classification probabilities).		
Value type	[0…100] real value	**Unit**	%

© ISO 2020 – All rights reserved

Copyright International Organization for Standardization
Provided by IHS Markit under license with ANSI
No reproduction or networking permitted without license from IHS

Order Number: W2233726
Sold to:APTIV [222021100001] - RUTH.M.MONTANO@APTIV.COM,
Not for Resale,2020-08-07 18:02:38 UTC

A.3.14 3D Position {x, y, z}

Table A.240 — Signal: 3D Position {x, y, z}

Name	3D Position {x, y, z}		
Description	3D point in vehicle coordinate system (see Vehicle coordinate system type (A.1.20)).		
Value type	3D vector real value	**Unit**	(m, m, m)

A.3.15 3D Position – error {x, y, z}

Table A.241 — Signal: 3D Position – error {x, y, z}

Name	3D Position – error {x, y, z}		
Description	The error represents the uncertainty of the state estimation of 3D Position {x, y, z} (A.3.14).		
Value type	3D vector real value	**Unit**	(m, m, m)

A.3.16 Number of valid shape reference points

Table A.242 — Signal: Number of valid shape reference points

Name	Number of valid shape reference points		
Description	The current Number of valid shape reference points (A.3.16) of the shape. Each 3D Position {x, y, z} (A.3.14) of a shape reference point is part of the shape surface.		
Value type	[0…] integer value	**Unit**	1

A.3.17 Orientation normal {x, y, z}

Table A.243 — Signal: Orientation normal {x, y, z}

Name	Orientation normal {x, y, z}		
Description	Normal vector of the shape's approximated tangential plane at the 3D Position {x, y, z} (A.3.14). Additional information: Describes the change of the shape segment over time as homography. Normal vector $\vec{n}$ of the homography $H = R - \frac{\vec{t}}{d} \cdot \vec{n}^T$. The vector is normalized.		
Value type	3D vector real value	**Unit**	(1, 1, 1)

© ISO 2020 – All rights reserved

Copyright International Organization for Standardization
Provided by IHS Markit under license with ANSI
No reproduction or networking permitted without license from IHS

Order Number: W2233726
Sold to:APTIV [222021100001] - RUTH.M.MONTANO@APTIV.COM,
Not for Resale,2020-08-07 18:02:38 UTC

A.3.18 Orientation normal – error {x, y, z}

Table A.244 — Signal: Orientation normal – error {x, y, z}

Name	Orientation normal – error {x, y, z}		
Description	Error of Orientation normal {x, y, z} (A.3.17) vector of the shape's approximated tangential plane at the 3D Position {x, y, z} (A.3.14).		
Value type	3D vector real value	**Unit**	(1, 1, 1)

A.3.19 Scaled translation rate {x, y, z}

Table A.245 — Signal: Scaled translation rate {x, y, z}

Name	Scaled translation rate {x, y, z}		
Description	Scaled translation of the shape's approximated tangential plane at the 3D Position {x, y, z} (A.3.14). Longitudinally (along the view axis) that is the inverse time to collision. No motion → (0, 0, 0) Additional information: Describes the change of the shape segment over time as homography. Scaled translation $\frac{\vec{t}}{d}$ of the homography $H = R - \frac{\vec{t}}{d} \cdot \vec{n}^T$.		
Value type	3D vector real value	**Unit**	(1/s, 1/s, 1/s)

A.3.20 Scaled translation rate – error {x, y, z}

Table A.246 — Signal: Scaled translation rate – error {x, y, z}

Name	Scaled translation rate – error {x, y, z}		
Description	Error of Scaled translation rate {x, y, z} (A.3.19) of the shape's approximated tangential plane at the 3D Position {x, y, z} (A.3.14).		
Value type	3D vector real value	**Unit**	(1/s, 1/s, 1/s)

© ISO 2020 – All rights reserved

Copyright International Organization for Standardization
Provided by IHS Markit under license with ANSI
No reproduction or networking permitted without license from IHS

Order Number: W2233726
Sold to:APTIV [222021100001] - RUTH.M.MONTANO@APTIV.COM,
Not for Resale,2020-08-07 18:02:38 UTC

A.3.21 Rotation rate {yaw, pitch, roll}

Table A.247 — Signal: Rotation rate {yaw, pitch, roll}

Name	Rotation rate {yaw, pitch, roll}		
Description	Rotation change of the shape's approximated tangential plane at the 3D Position {x, y, z} (A.3.14). No rotation change → (0, 0, 0) Additional information: Describes the change of the shape segment over time as homography. Change of rotation angle of the shape. Given by the three angles that construct the delta rotation matrix R of the homography $H = R - \frac{\vec{t}}{d} \cdot \vec{n}^T$.		
Value type	3D vector real value	**Unit**	(rad/s, rad/s, rad/s)

A.3.22 Rotation rate – error {yaw, pitch, roll}

Table A.248 — Signal: Rotation rate – error {yaw, pitch, roll}

Name	Rotation rate – error {yaw, pitch, roll}		
Description	Error of Rotation rate {yaw, pitch, roll} (A.3.21) change of the shape's approximated tangential plane at the 3D Position {x, y, z} (A.3.14).		
Value type	3D vector real value	**Unit**	(rad/s, rad/s, rad/s)

A.3.23 Scale change – feature level

Table A.249 — Signal: Scale change – feature level

Name	Scale change – feature level		
Description	Mean scale ratio of the shape's approximated tangential plane at the 3D Position {x, y, z} (A.3.14). No change in size := ratio of 1. Additional information: Describes the lateral shift and size change of the shape segment over time. The Scale change – feature level (A.3.23) is normalized.		
Value type	real value	**Unit**	1/s

© ISO 2020 – All rights reserved

Copyright International Organization for Standardization
Provided by IHS Markit under license with ANSI
No reproduction or networking permitted without license from IHS

Order Number: W2233726
Sold to:APTIV [222021100001] - RUTH.M.MONTANO@APTIV.COM,
Not for Resale,2020-08-07 18:02:38 UTC

A.3.24 Scale change – feature level – error

Table A.250 — Signal: Scale change – feature level – error

Name	Scale change – feature level – error		
Description	Error of Scale change – feature level (A.3.23) of the shape's approximated tangential plane at the 3D Position {x, y, z} (A.3.14).		
Value type	real value	**Unit**	1/s

A.3.25 Ultrasonic feature type

Table A.251 — Signal: Ultrasonic feature type

Name	Ultrasonic feature type		
Description	Ultrasonic feature type (A.3.25) contains information about the current measurement of this feature.		
Value type	enumeration	**Unit**	1

Table A.252 — Enumeration: Ultrasonic feature type – Example enumerators

Name	Description	RL enumerator
UltrasonicFeatureType_Point	Defined by one point.	"exemplary"
UltrasonicFeatureType_LineSegment	Defined by two or more points.	"exemplary"

A.3.26 Ultrasonic feature type probability value

Table A.253 — Signal: Ultrasonic feature type probability value

Name	Ultrasonic feature type probability value		
Description	Probability of the ultrasonic feature type.		
Value type	[0…100] real value	**Unit**	%

A.3.27 Number of valid points

Table A.254 — Signal: Number of valid points

Name	Number of valid points		
Description	The current Number of valid points (A.3.27).		
Value type	[0…] integer value	**Unit**	1

© ISO 2020 – All rights reserved

Copyright International Organization for Standardization
Provided by IHS Markit under license with ANSI
No reproduction or networking permitted without license from IHS

Order Number: W2233726
Sold to:APTIV [222021100001] - RUTH.M.MONTANO@APTIV.COM,
Not for Resale,2020-08-07 18:02:38 UTC

A.3.28 2D position {x, y}

Table A.255 — Signal: 2D position {x, y}

Name	2D position {x, y}		
Description	Special attributes of the feature. Additional information: Position with respect to the vehicle origin. Orientation - horizontal angle with respect to vehicle origin.		
Value type	2D vector real value	**Unit**	(m, m)

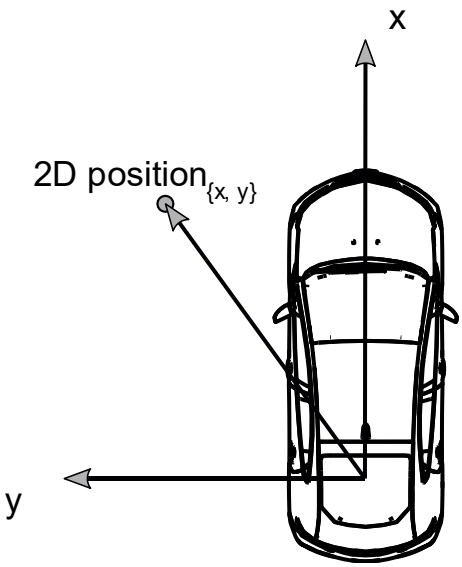

Figure A.12 — 2D position {x, y}

A.3.29 2D position – error {x, y}

Table A.256 — Signal: 2D position – error {x, y}

Name	2D position – error {x, y}		
Description	Error values for feature's 2D position {x, y} (A.3.28).		
Value type	2D vector real value	**Unit**	(m, m)

© ISO 2020 – All rights reserved

Copyright International Organization for Standardization
Provided by IHS Markit under license with ANSI
No reproduction or networking permitted without license from IHS
Order Number: W2233726
Sold to:APTIV [222021100001] - RUTH.M.MONTANO@APTIV.COM,
Not for Resale,2020-08-07 18:02:38 UTC

A.3.30 Orientation – feature level {vertical}

Table A.257 — Signal: Orientation – feature level {vertical}

Name	Orientation – feature level {vertical}		
Description	The orientation of the feature of the plane.		
Value type	1D vector real value	**Unit**	rad

A.3.31 Orientation – feature level – error {vertical}

Table A.258 — Signal: Orientation – feature level – error {vertical}

Name	Orientation – feature level – error {vertical}		
Description	Error value for feature's Orientation – feature level {vertical} (A.3.30).		
Value type	1D vector real value	**Unit**	m

A.3.32 Height – feature level

Table A.259 — Signal: Height – feature level

Name	Height – feature level		
Description	Information about the height of the point, resp. upper edge of the feature. Height with respect to the vehicle origin.		
Value type	real value	**Unit**	m

A.3.33 Height – feature level – error

Table A.260 — Signal: Height – feature level – error

Name	Height – feature level – error		
Description	Error value for feature's Height – feature level (A.3.32).		
Value type	real value	**Unit**	m

A.3.34 Velocity {x, y}

Table A.261 — Signal: Velocity {x, y}

Name	Velocity {x, y}		
Description	Velocity {x, y} (A.3.34) over ground of the feature in the vehicle coordinate system (see Vehicle coordinate system type (A.1.20)).		
Value type	2D vector real value	**Unit**	(m/s, m/s)

© ISO 2020 – All rights reserved

Copyright International Organization for Standardization
Provided by IHS Markit under license with ANSI
No reproduction or networking permitted without license from IHS

Order Number: W2233726
Sold to:APTIV [222021100001] - RUTH.M.MONTANO@APTIV.COM,
Not for Resale,2020-08-07 18:02:38 UTC

A.3.35 Velocity – error {x, y}

Table A.262 — Signal: Velocity – error {x, y}

Name	Velocity – error {x, y}		
Description	Error values for feature Velocity {x, y} (A.3.34) in the vehicle coordinate system (see Vehicle coordinate system type (A.1.20)).		
Value type	2D vector real value	**Unit**	(m/s, m/s)

A.3.36 Trilateration status

Table A.263 — Signal: Trilateration status

Name	Trilateration status		
Description	Information if feature is trilaterated with multiple signal ways or is not trilaterated.		
Value type	enumeration	**Unit**	1

Table A.264 — Enumeration: Trilateration status – Example enumerators

Name	Description	RL enumerator
TrilaterationStatus_Trilaterated	The 2D position {x, y} (A.3.28) measurement is based on at least three points.	“exemplary”
TrilaterationStatus_NotTrilaterated	The 2D position {x, y} (A.3.28) measurement is based on less than three points.	“exemplary”

A.3.37 Measurement status – feature level

Table A.265 — Signal: Measurement status – feature level

Name	Measurement status – feature level		
Description	Information about the measurement status of the feature.		
Value type	enumeration	**Unit**	1

Table A.266 — Enumeration: Measurement status – feature level – Example enumerators

Name	Description	RL enumerator
MeasurementStatus_Initialization	No information available.	“exemplary”
MeasurementStatus_Tracked	Not measured in this cycle.	“exemplary”
MeasurementStatus_Measured	Current position of this feature was measured.	“exemplary”
MeasurementStatus_Delete	Tracking will be deleted in the next cycle.	“exemplary”
MeasurementStatus_New	First cycle of tracking of the feature.	“exemplary”

© ISO 2020 – All rights reserved

Copyright International Organization for Standardization
Provided by IHS Markit under license with ANSI
No reproduction or networking permitted without license from IHS

Order Number: W2233726
Sold to:APTIV [222021100001] - RUTH.M.MONTANO@APTIV.COM,
Not for Resale,2020-08-07 18:02:38 UTC

A.4 Detection level entity signals

In this clause signals are defined for the entities of the Radar detection interface (9.2), the Lidar detection interface (9.3), the Camera detection interface (9.4) and the Ultrasonic detection interface (9.5). These interfaces are located at DLI.

A.4.1 Existence probability – detection level

Table A.267 — Signal: Existence probability – detection level

Name	Existence probability – detection level		
Description	Existence probability – detection level (A.4.1) of the detection, using e.g. SNR and RCS, not based on history. Additional information: Use as confidence measure where a low value means less confidence and a high value indicates strong confidence.		
Value type	[0…100] real value	**Unit**	%

A.4.2 Object ID reference – detection level

Table A.268 — Signal: Object ID reference – detection level

Name	Object ID reference – detection level		
Description	Object ID (A.2.1) of the object to which this detection is associated to; invalid = “no associated object” e.g. for the first detection cycle. Additional information: Refers to object (e.g. Potentially moving objects) with the highest probability. A detection can reference internal objects with a unique Object ID (A.2.1) without sending the object on one of the OLIs. Optimization (B.3.2): Mapping of objects (Object ID (A.2.1)) and detections (Object ID reference – detection level (A.4.2)) could be provided in a separate interface. Object ID reference – feature level (A.4.2) could reference entities of the OLI or entities which are used internal by the sensor.		
Value type	[0…] integer value	**Unit**	1

© ISO 2020 – All rights reserved

Copyright International Organization for Standardization
Provided by IHS Markit under license with ANSI
No reproduction or networking permitted without license from IHS

Order Number: W2233726
Sold to:APTIV [222021100001] - RUTH.M.MONTANO@APTIV.COM,
Not for Resale,2020-08-07 18:02:38 UTC

A.4.3 Feature ID reference

Table A.269 — Signal: Feature ID reference

Name	Feature ID reference		
Description	Feature ID (A.3.2) of the feature to which this detection is associated to; invalid = "no associated Feature" e.g. for the first detection cycle. Additional information: Refers to feature (e.g. camera features, ultrasonic features) with the highest probability. A detection can reference internal features with a unique Feature ID (A.3.2) without sending the feature on the FLI. Optimization (B.3.2): Mapping of features (Feature ID (A.3.2)) and detections (Feature ID reference (A.4.3)) could be provided in a separate interface. Feature ID reference (A.4.3) could reference entities of the FLI or entities which are used internal by the sensor.		
Value type	[0…] integer value	**Unit**	1

A.4.4 Time stamp difference – detection level

Table A.270 — Signal: Time stamp difference – detection level

Name	Time stamp difference – detection level		
Description	Each detection entity can have an individual time stamp, i.e. a time stamp difference to the Time stamp – measurement (A.1.4.2). Additional information: Time stamp of the detection can be calculated as Time stamp – measurement (A.1.4.2) of the detection list header + Time stamp difference – detection level (A.4.4) of the detection.		
Value type	real value	**Unit**	s

© ISO 2020 – All rights reserved

Copyright International Organization for Standardization
Provided by IHS Markit under license with ANSI
No reproduction or networking permitted without license from IHS

Order Number: W2233726
Sold to:APTIV [222021100001] - RUTH.M.MONTANO@APTIV.COM,
Not for Resale,2020-08-07 18:02:38 UTC

A.4.5 Position {Azimuth, Elevation, Distance}

Table A.271 — Signal: Position {Azimuth, Elevation, Distance}

Name	Position {Azimuth, Elevation, Distance}		
Description	Measured radial distance, elevation and azimuth angles of the detection. Additional information: {Azimuth}: Azimuth angle in XY-plane (sensor frame). X-axis := 0 rad. {Elevation}: Elevation angle between XY-plane (sensor frame) and distance vector. XY-plane := 0 rad. {Distance}: Radial distance between sensor frame origin and detection. Due to sensor specific measurement method, in spherical coordinates. In case of e.g. angle ambiguity, detection is sent several times (different angles and existence probabilities).		
Value type	3D vector real value	**Unit**	(m, rad, rad)

A.4.6 Position – error {Azimuth, Elevation, Distance}

Table A.272 — Signal: Position – error {Azimuth, Elevation, Distance}

Name	Position – error {Azimuth, Elevation, Distance}		
Description	Error values of the {Azimuth, Elevation, Distance} to the Position {Azimuth, Elevation, Distance} (A.4.5). Additional information: The values are given in the sensor coordinate system.		
Value type	3D vector real value	**Unit**	(m, rad, rad)

A.4.7 Radial relative velocity

Table A.273 — Signal: Radial relative velocity

Name	Radial relative velocity		
Description	Radial relative velocity (A.4.7) (in direction to the sensor) of the detection. The velocity is the relative velocity between the absolute velocity of the sensor and the absolute velocity of the detection. Additional information: The values are given in the sensor coordinate system.		
Value type	real value	**Unit**	m/s

© ISO 2020 – All rights reserved

Copyright International Organization for Standardization
Provided by IHS Markit under license with ANSI
No reproduction or networking permitted without license from IHS
Order Number: W2233726
Sold to:APTIV [222021100001] - RUTH.M.MONTANO@APTIV.COM,
Not for Resale,2020-08-07 18:02:38 UTC

A.4.8 Radial relative velocity – error

Table A.274 — Signal: Radial relative velocity – error

Name	Radial relative velocity – error		
Description	Error value of the detection measured Radial relative velocity (A.4.7). Additional information: The values are given in the sensor coordinate system.		
Value type	real value	**Unit**	m/s

A.4.9 Radar cross section

Table A.275 — Signal: Radar cross section

Name	Radar cross section		
Description	Radar cross section (A.4.9) (RCS) of the detection. Additional information: Value is compensated. Slow changes e.g. aging of the sensor is compensated, fast changes e.g. rain is not compensated. All systematic absorptions are compensated, e.g. from the bumper.		
Value type	real value	**Unit**	dB m^2

A.4.10 Radar cross section – error

Table A.276 — Signal: Radar cross section – error

Name	Radar cross section – error		
Description	Error value of the detection's Radar cross section (A.4.9).		
Value type	real value	**Unit**	dB m^2

A.4.11 Signal to noise ratio – detection level

Table A.277 — Signal: Signal to noise ratio – detection level

Name	Signal to noise ratio – detection level		
Description	Signal to noise ratio – detection level (A.4.11) of the detection.		
Value type	real value	**Unit**	dB

© ISO 2020 – All rights reserved

Copyright International Organization for Standardization
Provided by IHS Markit under license with ANSI
No reproduction or networking permitted without license from IHS

Order Number: W2233726
Sold to:APTIV [222021100001] - RUTH.M.MONTANO@APTIV.COM,
Not for Resale,2020-08-07 18:02:38 UTC

A.4.12 Signal to noise ratio – detection level – error

Table A.278 — Signal: Signal to noise ratio – detection level – error

Name	Signal to noise ratio – detection level – error		
Description	Error value of the detection's Signal to noise ratio – detection level (A.4.11).		
Value type	real value	**Unit**	dB

A.4.13 Multi target probability

Table A.279 — Signal: Multi target probability

Name	Multi target probability		
Description	Describes the possibility if more than one real-world object has led to this detection.		
Value type	[0…100] real value	**Unit**	%

A.4.14 Ambiguity ID

Table A.280 — Signal: Ambiguity ID

Name	Ambiguity ID		
Description	Ambiguous measurement uses one Ambiguity ID (A.4.14) for ambiguous detections candidates. Ambiguous detections (all detection candidates for the same measurement) are shown by the same Ambiguity ID (A.4.14). Unambiguous measurements have Ambiguity ID (A.4.14) := 0. Additional information: Ambiguity e.g. Radial velocity ambiguity domain {begin, end} (A.1.15), Range ambiguity domain {begin, end} (A.1.16), Angle azimuth ambiguity domain {begin, end} (A.1.17) or Angle elevation ambiguity domain {begin, end} (A.1.18). Other ambiguities can add an additional signal analogous to these signals. The Ambiguity ID (A.4.14) in the list is unique only for each cycle. The Ambiguity ID (A.4.14) could be reused every cycle.		
Value type	[0…] integer value	**Unit**	1

A.4.15 Detection ambiguity probability

Table A.281 — Signal: Detection ambiguity probability

Name	Detection ambiguity probability		
Description	Probability for different hypothesis, sum is less or equal 100 % for all detections with the same Ambiguity ID (A.4.14).		
Value type	[0…100] real value	**Unit**	%

Copyright International Organization for Standardization
Provided by IHS Markit under license with ANSI
No reproduction or networking permitted without license from IHS
Order Number: W2233726
Sold to:APTIV [222021100001] - RUTH.M.MONTANO@APTIV.COM,
Not for Resale,2020-08-07 18:02:38 UTC

A.4.16 Free space probability

Table A.282 — Signal: Free space probability

Name	Free space probability		
Description	The Free space probability (A.4.16) in the range [0, 100] % from the origin up to this detection, as given by the distance. Additional information: The probability of free space between the origin and this detection as given by the distance in the range [0, 100]. In this range e.g. Signal to noise ratio – detection level (A.4.11) is very low. A second detection (detection behind another detection) has free space probability = 0 %. In case of an empty measurement the detection's Existence probability – detection level (A.4.1) is set to 0 % and the distance is set to a default value. The distance and Free space probability (A.4.16) give the free space.		
Value type	[0…100] real value	**Unit**	%

A.4.17 Number of valid detection classifications

Table A.283 — Signal: Number of valid detection classifications

Name	Number of valid detection classifications		
Description	The current Number of valid detection classifications (A.4.17) of the detection classifications. Classifications are defined by type and probability value.		
Value type	[0…] integer value	**Unit**	1

A.4.18 Detection classification type

Table A.284 — Signal: Detection classification type

Name	Detection classification type		
Description	Additional classification information if detection is assigned to an object (Object ID reference – detection level (A.4.2)). Additional information: Exception to single shot rule: can be tracked over time. A detection might require multiple time steps.		
Value type	enumeration	**Unit**	1

Table A.285 — Enumeration: Detection classification type – Example enumerators

Name	Description	RL enumerator
DetectionClassificationType_NoClassification	Detection entity is not classified.	"exemplary"
DetectionClassificationType_Noise	Detection entity is noise.	"exemplary"
DetectionClassificationType_Obstacle	Detection entity is an obstacle for vehicle.	"exemplary"

© ISO 2020 – All rights reserved

Copyright International Organization for Standardization
Provided by IHS Markit under license with ANSI
No reproduction or networking permitted without license from IHS

Order Number: W2233726
Sold to:APTIV [222021100001] - RUTH.M.MONTANO@APTIV.COM,
Not for Resale,2020-08-07 18:02:38 UTC

DetectionClassificationType_Underdriveable	Detection entity is underdrivable for vehicle.	“exemplary”
DetectionClassificationType_Overdrivable	Detection entity is overdrivable for vehicle.	“exemplary”
DetectionClassificationType_Nearest	Detection entity is the nearest detection of a measurement.	“exemplary”
DetectionClassificationType_Strongest	Detection entity has the strongest signal of a measurement.	“exemplary”

A.4.19 Detection classification probability value

Table A.286 — Signal: Detection classification probability value

Name	Detection classification probability value		
Description	A probability for the corresponding Detection classification type (A.4.18). All classification probabilities for each entity shall sum to 100 %.		
Value type	[0…100] real value	**Unit**	%

A.4.20 Height – lidar

Table A.287 — Signal: Height – lidar

Name	Height – lidar		
Description	Height – lidar (A.4.20) field is required if multiple scan points are vertically clustered. The spherical point of detection is the lower point of height. The height is vertical (Z-axis of the vehicle). Only vertical clustering allowed. Additional information: The values are given in the sensor coordinate system.		
Value type	real value	**Unit**	m

A.4.21 Height – lidar – error

Table A.288 — Signal: Height – lidar – error

Name	Height – lidar – error		
Description	Error value of the detection Height – lidar (A.4.20). Additional information: The values are given in the sensor coordinate system.		
Value type	real value	**Unit**	m

© ISO 2020 – All rights reserved

Copyright International Organization for Standardization
Provided by IHS Markit under license with ANSI
No reproduction or networking permitted without license from IHS
Order Number: W2233726
Sold to:APTIV [222021100001] - RUTH.M.MONTANO@APTIV.COM,
Not for Resale,2020-08-07 18:02:38 UTC

A.4.22 Reflectivity

Table A.289 — Signal: Reflectivity

Name	Reflectivity		
Description	Reflectivity (A.4.22) of the detection w.r.t. norm target. Additional information For lidar sensors e.g. (assuming Lambertian reflectivity) for the wave length used by the laser. Comparable to Radar cross section (A.4.9).		
Value type	real value	**Unit**	%

A.4.23 Reflectivity – error

Table A.290 — Signal: Reflectivity – error

Name	Reflectivity – error		
Description	Error value of the detection's Reflectivity (A.4.22).		
Value type	real value	**Unit**	%

A.4.24 Shape type – detection level

Table A.291 — Signal: Shape type – detection level

Name	Shape type – detection level		
Description	Shape of the segment's borderline. Additional information: The shape defines how the referenced points are connected. The interpretation of the enumerators will be defined during the system design phase.		
Value type	enumeration	**Unit**	1

Table A.292 — Enumeration: Shape type – detection level – Example enumerators

Name	Description	RL enumerator
ShapeType_Point	Shape is a point.	"exemplary"
ShapeType_Box	Shape is a box (2 or 3 points).	"exemplary"
ShapeType_Ellipse	Shape is an ellipse (2 or 3 points).	"exemplary"
ShapeType_Polygon	Shape is a polygon (3 or more points).	"exemplary"
ShapeType_Polyline	Shape is a polyline (2 or more points).	"exemplary"
ShapeType_PointCloud	Shape is a point cloud (2 or more points).	"exemplary"

© ISO 2020 – All rights reserved

Copyright International Organization for Standardization
Provided by IHS Markit under license with ANSI
No reproduction or networking permitted without license from IHS

Order Number: W2233726
Sold to:APTIV [222021100001] - RUTH.M.MONTANO@APTIV.COM,
Not for Resale,2020-08-07 18:02:38 UTC

A.4.25 Number of valid shape classifications – detection level

Table A.293 — Signal: Number of valid shape classifications – detection level

Name	Number of valid shape classifications – detection level		
Description	The current Number of valid shape classifications – detection level (A.4.25) of the shape. Classifications are defined by type and value.		
Value type	[0…] integer value	**Unit**	1

A.4.26 Shape classification type – detection level

Table A.294 — Signal: Shape classification type – detection level

Name	Shape classification type – detection level		
Description	The classification type for the shape.		
Value type	enumeration	**Unit**	1

Table A.295 — Enumeration: Shape classification type – detection level – Example enumerators

Name	Description	RL enumerator
ShapeClassificationType_Background	Shape is classified as background entity.	“exemplary”
ShapeClassificationType_Foreground	Shape is classified as foreground entity.	“exemplary”
ShapeClassificationType_Flat	Shape is classified as flat entity.	“exemplary”
ShapeClassificationType_Upright	Shape is classified as upright entity.	“exemplary”
ShapeClassificationType_Ground	Shape is classified as ground entity.	“exemplary”
ShapeClassificationType_Sky	Shape is classified as sky entity.	“exemplary”
ShapeClassificationType_Building	Shape is classified as building entity.	“exemplary”
ShapeClassificationType_Vegetation	Shape is classified as vegetation entity.	“exemplary”
ShapeClassificationType_Road	Shape is classified as road entity.	“exemplary”
ShapeClassificationType_NonRoad	Shape is classified as non-road entity.	“exemplary”
ShapeClassificationType_Sidewalk	Shape is classified as sidewalk entity.	“exemplary”
ShapeClassificationType_Pedestrian	Shape is classified as pedestrian entity.	“exemplary”
ShapeClassificationType_Vehicle	Shape is classified as vehicle entity.	“exemplary”
ShapeClassificationType_TrafficSign	Shape is classified as traffic sign entity.	“exemplary”
ShapeClassificationType_PedestrianFront	Shape is classified as pedestrian front-view entity.	“exemplary”
ShapeClassificationType_PedestrianSide	Shape is classified as pedestrian side-view entity.	“exemplary”
ShapeClassificationType_PedestrianRear	Shape is classified as pedestrian rear-view entity.	“exemplary”

© ISO 2020 – All rights reserved

Copyright International Organization for Standardization
Provided by IHS Markit under license with ANSI
No reproduction or networking permitted without license from IHS

Order Number: W2233726
Sold to:APTIV [222021100001] - RUTH.M.MONTANO@APTIV.COM,
Not for Resale,2020-08-07 18:02:38 UTC

A.4.27 Shape classification variant

Table A.296 — Signal: Shape classification variant

Name	Shape classification variant		
Description	Description of the segment's possible content for Shape classification type – detection level (A.4.26) ("ShapeClassification_False" := confidence < 50 % otherwise "ShapeClassification_True").		
Value type	enumerator	**Unit**	1

Table A.297 — Enumeration: Shape classification variant – Example enumerators

Name	Description	RL enumerator
ShapeClassification_True	Shape is shape classification type.	"exemplary"
ShapeClassification_False	Shape is not shape classification type.	"exemplary"

A.4.28 Shape ambiguity ID

Table A.298 — Signal: Shape ambiguity ID

Name	Shape ambiguity ID		
Description	Each ambiguous shape classification with different shape classification probabilities uses one unique ID. Ambiguous detections (all detection candidates for the same measurement) are shown by the identical Shape ambiguity ID (A.4.28) value. Unambiguous shape classifications have Shape ambiguity ID (A.4.28) := 0.		
Value type	[0…] integer value	**Unit**	1

A.4.29 Colour value – detection level

Table A.299 — Signal: Colour value – detection level

Name	Colour value – detection level		
Description	Definition of the colour value(s). Number of values depends on the Colour model type (A.1.14). Additional information: E.g. "ColourModelType_RGB" has 3 colour values, i.e. first value red, second value green, third value blue.		
Value type	[0…100] real value	**Unit**	%

© ISO 2020 – All rights reserved

Copyright International Organization for Standardization
Provided by IHS Markit under license with ANSI
No reproduction or networking permitted without license from IHS

Order Number: W2233726
Sold to:APTIV [222021100001] - RUTH.M.MONTANO@APTIV.COM,
Not for Resale,2020-08-07 18:02:38 UTC

A.4.30 Colour probability – detection level

Table A.300 — Signal: Colour probability – detection level

Name	Colour probability – detection level		
Description	Colour probability – detection level gives the proportion of the area with the specified colour. Additional information: Multicolour may be indicated by Colour probability – detection level (A.4.30).		
Value type	[0…100] real value	**Unit**	%

A.4.31 Number of valid shape points – detection level

Table A.301 — Signal: Number of valid shape points – detection level

Name	Number of valid shape points – detection level		
Description	The current Number of valid shape points – detection level (A.4.31) of the shape. Points are referenced by the detection shape. Additional information: Number of valid shape points – detection level (A.4.31) >= 1.		
Value type	[0…] integer value	**Unit**	1

A.4.32 Point existence probability – detection level

Table A.302 — Signal: Point existence probability – detection level

Name	Point existence probability – detection level		
Description	Existence probability of the point. Each point is only used by one shape (maybe one shape is sent in several entities with different shape classification probabilities and the same Shape ambiguity ID (A.4.28)).		
Value type	[0…100] real value	**Unit**	%

© ISO 2020 – All rights reserved

Copyright International Organization for Standardization
Provided by IHS Markit under license with ANSI
No reproduction or networking permitted without license from IHS
Order Number: W2233726
Sold to:APTIV [222021100001] - RUTH.M.MONTANO@APTIV.COM,
Not for Resale,2020-08-07 18:02:38 UTC

A.4.33 Ellipse semi-minor axis

Table A.303 — Signal: Ellipse semi-minor axis

Name	Ellipse semi-minor axis		
Description	Distributed sender/receiver sensor (virtual sensor) the distance is the ellipse's semi-minor axis of the detection. Single sensor (real sensor) the semi-minor axis is the radius of the detection. Additional information: X-axis of the sensor mounting origin is Ellipse semi-minor axis (A.4.33). The value is given in the sensor coordinate system.		
Value type	real value	**Unit**	m

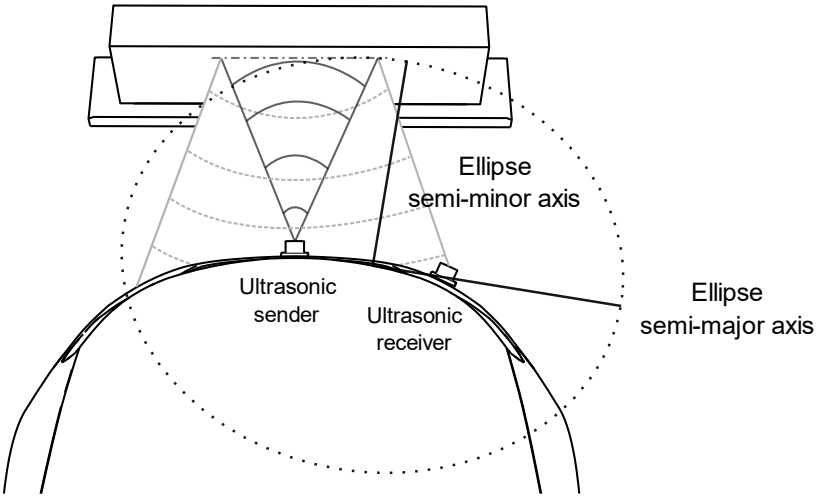

Figure A.13 — Ultrasonic detection ellipse

A.4.34 Ellipse semi-major axis

Table A.304 — Signal: Ellipse semi-major axis

Name	Ellipse semi-major axis		
Description	Distributed sender/receiver sensor (virtual sensor) the distance is the ellipse's semi-major axis of the detection. Single sensor (real sensor) the semi-major axis is the radius of the detection. Additional information: Y-Axis of the sensor mounting origin is Ellipse semi-major axis (A.4.34). The value is given in the sensor coordinate system.		
Value type	real value	**Unit**	m

© ISO 2020 – All rights reserved

Copyright International Organization for Standardization
Provided by IHS Markit under license with ANSI
No reproduction or networking permitted without license from IHS

Order Number: W2233726
Sold to:APTIV [222021100001] - RUTH.M.MONTANO@APTIV.COM,
Not for Resale,2020-08-07 18:02:38 UTC

A.4.35 Ellipse axes – error {Ellipse semi-minor axis, Ellipse semi-major axis}

Table A.305 — Signal: Ellipse axes – error {Ellipse semi-minor axis, Ellipse semi-major axis}

Name	Ellipse axes – error {Ellipse semi-minor axis, Ellipse semi-major axis}		
Description	Distributed sender/receiver sensor (virtual sensor) the distance is the ellipse's semi-major axis of the detection. Single sensor (real sensor) the semi-major axis is the radius of the detection. Additional information: X-axis of the sensor mounting origin is Ellipse semi-minor axis (A.4.33). Y-axis of the sensor mounting origin is Ellipse semi-major axis (A.4.34). The values are given in the sensor coordinate system.		
Value type	2D vector real value	**Unit**	(m, m)

A.4.36 Height – ultrasonic

Table A.306 — Signal: Height – ultrasonic

Name	Height – ultrasonic		
Description	Estimated height of the detection in sensor coordinate system. Additional information: The values are given in the sensor coordinate system.		
Value type	real value	**Unit**	m

A.4.37 Height – ultrasonic – error

Table A.307 — Signal: Height – ultrasonic – error

Name	Height – ultrasonic – error		
Description	Error of the estimated height of the detection in sensor coordinate system. Additional information: The values are given in the sensor coordinate system.		
Value type	real value	**Unit**	m

© ISO 2020 – All rights reserved

Copyright International Organization for Standardization
Provided by IHS Markit under license with ANSI
No reproduction or networking permitted without license from IHS

Order Number: W2233726
Sold to:APTIV [222021100001] - RUTH.M.MONTANO@APTIV.COM,
Not for Resale,2020-08-07 18:02:38 UTC

A.5 Supportive sensor interface entity signals

In this clause signals are defined for the entities of the Sensor performance interface (10.2) and the Sensor health information interface (10.3). These interfaces are located at SSI. The Sensor health information interface (10.3) consists of one information entity for the complete sensor.

A.5.1 Horizontal angle {begin, end}

Table A.308 — Signal: Horizontal angle {begin, end}

Name	Horizontal angle {begin, end}		
Description	FOV defined by opening angles in sensor XY-plane. Additional information: The values are given in the sensor coordinate system.		
Value type	2D vector real value	**Unit**	(rad, rad)

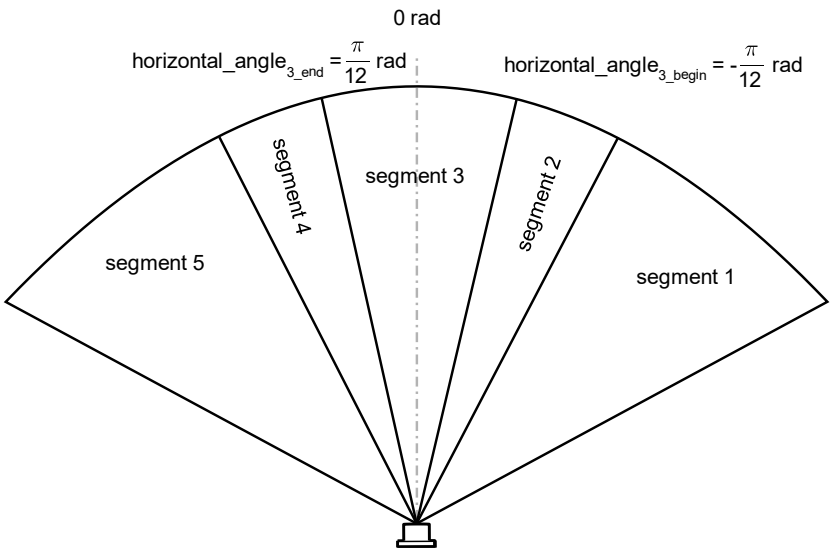

Figure A.14 — Example for Horizontal angle {begin, end} (A.5.1) in XY-plane

A.5.2 Vertical angle {begin, end}

Table A.309 — Signal: Vertical angle {begin, end}

Name	Vertical angle {begin, end}		
Description	FOV defined by opening angles in sensor XZ-plane. Additional information: The values are given in the sensor coordinate system.		
Value type	2D vector real value	**Unit**	(rad, rad)

© ISO 2020 – All rights reserved

Copyright International Organization for Standardization
Provided by IHS Markit under license with ANSI
No reproduction or networking permitted without license from IHS
Order Number: W2233726
Sold to:APTIV [222021100001] - RUTH.M.MONTANO@APTIV.COM,
Not for Resale,2020-08-07 18:02:38 UTC

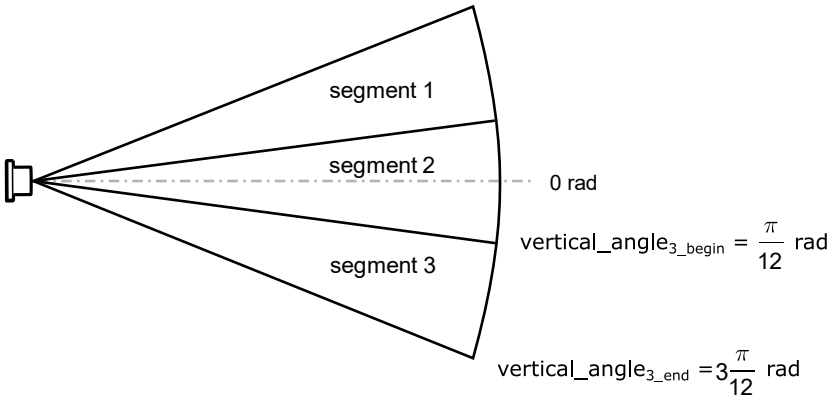

Figure A.15 — Example for Vertical angle {begin, end} (A.5.2) in XZ-plane

A.5.3 Resolution {horizontal, vertical}

Table A.310 — Signal: Resolution {horizontal, vertical}

Name	Resolution {horizontal, vertical}		
Description	The resolution of the sensor within the specified segment is the angle between the maxima of two adjacent measurement points.		
Value type	2D vector real value	**Unit**	(rad, rad)

A.5.4 Beam divergence {horizontal, vertical}

Table A.311 — Signal: Beam divergence {horizontal, vertical}

Name	Beam divergence {horizontal, vertical}		
Description	The Beam divergence {horizontal, vertical} (A.5.4) of the sensor within the specified segment is the full width at half maximum (FWHM) of the beam (given as the angle in rad).		
Value type	2D vector real value	**Unit**	(rad, rad)

A.5.5 Range gain

Table A.312 — Signal: Range gain

Name	Range gain		
Description	The Range gain (A.5.5) describes the range difference in this segment compared to a defined normative value. A value of 100 % means the same range as the initially defined segment, values > 100 % would be a corresponding range increase and < 100 % a range loss.		
Value type	real value	**Unit**	%

© ISO 2020 – All rights reserved

Copyright International Organization for Standardization
Provided by IHS Markit under license with ANSI
No reproduction or networking permitted without license from IHS
Order Number: W2233726
Sold to:APTIV [222021100001] - RUTH.M.MONTANO@APTIV.COM,
Not for Resale,2020-08-07 18:02:38 UTC

A.5.6 Blockage status

Table A.313 — Signal: Blockage status

Name	Blockage status		
Description	Defines the overall blockage of the FOV segment.		
Value type	enumeration	**Unit**	1

Table A.314 — Enumeration: Blockage status – Example enumerators

Name	Description	RL enumerator
BlockageStatus_FullBlockage	The sensor is completely blocked, no more feature and functionality working due to blockage condition.	“exemplary”
BlockageStatus_PartialBlockageHighImpact	The sensor has detected a blockage condition which has a significant impact on sensor performance (e.g. range).	“exemplary”
BlockageStatus_PartialBlockageMediumImpact	The sensor has detected a blockage condition which already has impact on sensor performance (e.g. range).	“exemplary”
BlockageStatus_PartialBlockageLowImpact	The sensor detects that a blockage condition is present or is increasing, but the degree of blockage has not yet had a significant impact on sensor performance and functionality.	“exemplary”
BlockageStatus_Defect	The full specified range is blocked, due to e.g. a pixel defect. This segment may overlap with other segments.	“exemplary”
BlockageStatus_None	Normal mode.	“exemplary”

A.5.7 Number of valid field of view reduction reasons

Table A.315 — Signal: Number of valid field of view reduction reasons

Name	Number of valid field of view reduction reasons		
Description	The current Number of valid field of view reduction reasons (A.5.7). A reduction of the FOV can have many reasons.		
Value type	[0…] integer value	**Unit**	1

© ISO 2020 – All rights reserved

Copyright International Organization for Standardization
Provided by IHS Markit under license with ANSI
No reproduction or networking permitted without license from IHS

Order Number: W2233726
Sold to:APTIV [222021100001] - RUTH.M.MONTANO@APTIV.COM,
Not for Resale,2020-08-07 18:02:38 UTC

A.5.8 Field of view reduction reason type

Table A.316 — Signal: Field of view reduction reason type

Name	Field of view reduction reason type		
Description	Defines the reason for a FOV reduction of the segment. A reduction of the FOV can have many reasons.		
Value type	enumeration	**Unit**	1

Table A.317 — Enumeration: Field of view reduction reason type – Example enumerators

Name	Description	RL enumerator
FieldOfViewReductionType_Snow	Range reduction due to snow.	“exemplary”
FieldOfViewReductionType_Rain	Range reduction due to rain.	“exemplary”
FieldOfViewReductionType_Clutter	Range reduction due to clutter.	“exemplary”
FieldOfViewReductionType_FlyingLeaves	Range reduction due to flying leaves.	“exemplary”
FieldOfViewReductionType_NightAndLights	Range reduction due to night and lights.	“exemplary”
FieldOfViewReductionType_Shades	Range reduction due to shades.	“exemplary”
FieldOfViewReductionType_ContrastIssues	Range reduction due to contrast issues.	“exemplary”
FieldOfViewReductionType_Jamming	Range reduction, e.g. electromagnetic compatibility.	“exemplary”
FieldOfViewReductionType_DeviceInterference	Range reduction, e.g. electromagnetic compatibility.	“exemplary”
FieldOfViewReductionType_Sand	Range reduction due to sand.	“exemplary”
FieldOfViewReductionType_WetRoads	Range reduction due to wet roads.	“exemplary”
FieldOfViewReductionType_Ghosts	Range reduction due to ghosts.	“exemplary”
FieldOfViewReductionType_SnowOnSensorSurface	Near range blockage due to snow on the sensor surface.	“exemplary”
FieldOfViewReductionType_WaterOnSensorSurface	Near range blockage due to water on the sensor surface.	“exemplary”
FieldOfViewReductionType_SoilOnSensorSurface	Near range blockage due to soil on the sensor surface.	“exemplary”
FieldOfViewReductionType_ScratchesOnSensorSurface	Near range blockage due to scratches on the sensor surface.	“exemplary”

© ISO 2020 – All rights reserved

Copyright International Organization for Standardization
Provided by IHS Markit under license with ANSI
No reproduction or networking permitted without license from IHS
Order Number: W2233726
Sold to:APTIV [222021100001] - RUTH.M.MONTANO@APTIV.COM,
Not for Resale,2020-08-07 18:02:38 UTC

A.5.9 Field of view reduction reason probability

Table A.318 — Signal: Field of view reduction reason probability

Name	Field of view reduction reason probability		
Description	Probability of FOV reduction of the segment by Field of view reduction reason type (A.5.8). The sum of all Field of view reduction reason probability (A.5.9) values does not have to be 100 %.		
Value type	[0…100] real value	**Unit**	%

A.5.10 Number of valid object detection classifications

Table A.319 — Signal: Number of valid object detection classifications

Name	Number of valid object detection classifications		
Description	The current number of valid “real-world” detection classifications on object level.		
Value type	[0…] integer value	**Unit**	1

A.5.11 Recognized object type

Table A.320 — Signal: Recognized object type

Name	Recognized object type		
Description	Classification of the sensor’s recognition capabilities for defined object types.		
Value type	enumeration	**Unit**	1

Table A.321 — Enumeration: Recognized object type – Example enumerators

Name	Description	RL enumerator
RecognizedObjectType_Car	Recognized entity is a car.	“exemplary”
RecognizedObjectType_Truck	Recognized entity is a truck.	“exemplary”
RecognizedObjectType_MotorBike	Recognized entity is a motor bike.	“exemplary”
RecognizedObjectType_Bicycle	Recognized entity is a bicycle.	“exemplary”
RecognizedObjectType_Pedestrian	Recognized entity is a pedestrian.	“exemplary”
RecognizedObjectType_MovingObject	Recognized entity is an unknown moving object.	“exemplary”
RecognizedObjectType_RoadBoundary	Recognized entity is a road boundary.	“exemplary”
RecognizedObjectType_RoadMarking	Recognized entity is a road marking	“exemplary”
RecognizedObjectType_StaticObject	Recognized entity is a static object.	“exemplary”
RecognizedObjectType_TrafficSign	Recognized entity is a traffic sign.	“exemplary”
RecognizedObjectType_TrafficLight	Recognized entity is a traffic light.	“exemplary”

© ISO 2020 – All rights reserved

Copyright International Organization for Standardization
Provided by IHS Markit under license with ANSI
No reproduction or networking permitted without license from IHS

Order Number: W2233726
Sold to:APTIV [222021100001] - RUTH.M.MONTANO@APTIV.COM,
Not for Resale,2020-08-07 18:02:38 UTC

A.5.12 Detection range {min, max}

Table A.322 — Signal: Detection range {min, max}

Name	Detection range {min, max}		
Description	Sensor detection range for one object type with Minimum classification rate (A.5.13) this object type and Maximum false positive rate (A.5.14) for this object type. Detected range {min} is the closest possible detection and Detection range {max} is the farthest possible detection with respect to the sensor origin. Additional information: The values are given in the sensor coordinate system.		
Value type	2D vector real value	**Unit**	(m, m)

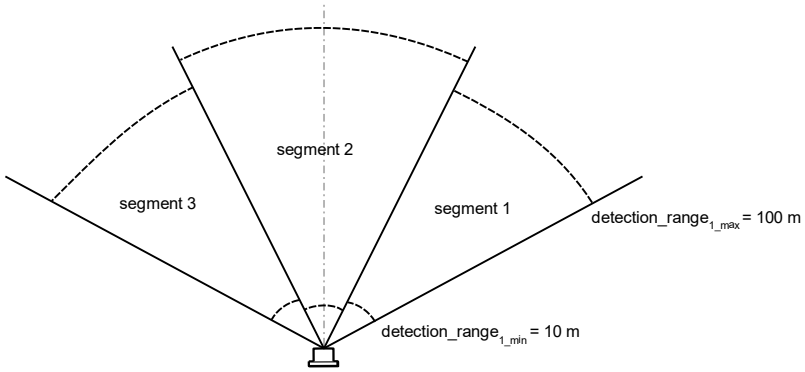

Figure A.16 — Example for Detection range {min, max} (A.5.12) in one plane

A.5.13 Minimum classification rate

Table A.323 — Signal: Minimum classification rate

Name	Minimum classification rate		
Description	The estimated Minimum classification rate (A.5.13) for a FOV segment, i.e. over the complete Detection range {min, max} (A.5.12).		
Value type	[0…100] real value	**Unit**	%

A.5.14 Maximum false positive rate

Table A.324 — Signal: Maximum false positive rate

Name	Maximum false positive rate		
Description	The estimated Maximum false positive rate (A.5.14) for a FOV segment.		
Value type	[0…100] real value	**Unit**	%

© ISO 2020 – All rights reserved

Copyright International Organization for Standardization
Provided by IHS Markit under license with ANSI
No reproduction or networking permitted without license from IHS

Order Number: W2233726
Sold to:APTIV [222021100001] - RUTH.M.MONTANO@APTIV.COM,
Not for Resale,2020-08-07 18:02:38 UTC

A.5.15 Positive predictive value

Table A.325 — Signal: Positive predictive value

Name	Positive predictive value		
Description	The estimated Positive predictive value (A.5.15) for a FOV segment.		
Value type	[0…100] real value	**Unit**	%

A.5.16 Number of valid reference detection classifications

Table A.326 — Signal: Number of valid reference detection classifications

Name	Number of valid reference detection classifications		
Description	The current Number of valid reference detection classifications (A.5.16) on detection level for reference targets.		
Value type	[0…] integer value	**Unit**	1

A.5.17 Radar cross section reference target

Table A.327 — Signal: Radar cross section reference target

Name	Radar cross section reference target		
Description	Radar cross section reference target (A.5.17) of one defined reference target.		
Value type	real value	**Unit**	dB m^2

A.5.18 Reflectivity reference target

Table A.328 — Signal: Reflectivity reference target

Name	Reflectivity reference target		
Description	Reflectivity reference target (A.5.18) of one defined reference target.		
Value type	real value	**Unit**	%

© ISO 2020 – All rights reserved

Copyright International Organization for Standardization
Provided by IHS Markit under license with ANSI
No reproduction or networking permitted without license from IHS
Order Number: W2233726
Sold to:APTIV [222021100001] - RUTH.M.MONTANO@APTIV.COM,
Not for Resale,2020-08-07 18:02:38 UTC

A.5.19 Delta E colour difference

Table A.329 — Signal: Delta E colour difference

Name	Delta E colour difference		
Description	This value is a measure of the minimum assumed colour difference of the shape relative to its background colour. Delta E is defined in ISO 11664-4. Additional information: It is including information of brightness difference as well as colour difference relative to the background.		
Value type	real value	**Unit**	1

A.5.20 Relative speed range {min, max}

Table A.330 — Signal: Relative speed range {min, max}

Name	Relative speed range {min, max}		
Description	Describes the relative radial speed range in the sensor coordinate system. Range is defined by two range values: negative values indicate lower speed than the ego-vehicle, positive values indicate higher velocity than ego-vehicle.		
Value type	2D vector real value	**Unit**	(1, 1)

A.5.21 Signal to noise ratio – supportive level

Table A.331 — Signal: Signal to noise ratio – supportive level

Name	Signal to noise ratio – supportive level		
Description	Signal to noise ratio – supportive level (A.5.21) (SNR) of the reference target detection.		
Value type	real value	**Unit**	dB

A.5.22 Sensor operation state

Table A.332 — Signal: Sensor operation state

Name	Sensor operation state		
Description	Status information of the sensor. Additional information: Signal describes the general status of the sensor to processes measuring data and to communicate with the host vehicle.		
Value type	enumeration	**Unit**	1

Copyright International Organization for Standardization
Provided by IHS Markit under license with ANSI
No reproduction or networking permitted without license from IHS
Order Number: W2233726
Sold to:APTIV [222021100001] - RUTH.M.MONTANO@APTIV.COM,
Not for Resale,2020-08-07 18:02:38 UTC

Table A.333 — Enumeration: Sensor operation state – Example enumerators

Name	Description	RL enumerator
SensorOperationState_Normal	All sensor components up and running: e.g. all initialization given and communication fully established.	"exemplary"
SensorOperationState_Limited	Only limited processing power available.	"exemplary"
SensorOperationState_Off	Status during shut-off.	"exemplary"
SensorOperationState_Error	Internal error detected: e.g. memory check.	"exemplary"
SensorOperationState_Initializing	During sensor initialization is carried out.	"exemplary"
SensorOperationState_NotDefined	Sensor operation state is not defined.	"exemplary"

A.5.23 Sensor operation mode

Table A.334 — Signal: Sensor operation mode

Name	Sensor operation mode		
Description	Status information of the sensor. Additional information: Signal provides information about the measuring status of the sensor.		
Value type	enumeration	**Unit**	1

Table A.335 — Enumeration: Sensor operation mode – Example enumerators

Name	Description	RL enumerator
SensorOperationMode_SensorMeasuringActive	Sensor is active and performs measurements.	"exemplary"
SensorOperationMode_SensorMeasuringDisabled	Sensor is disabled and performs no measurement at the moment.	"exemplary"
SensorOperationMode_SensorMeasuringTestmode	Sensor is in active measurement mode, however in test mode.	"exemplary"

A.5.24 Sensor defect detected

Table A.336 — Signal: Sensor defect detected

Name	Sensor defect detected		
Description	Signal for a sensor defect is detected.		
Value type	enumeration	**Unit**	1

© ISO 2020 – All rights reserved

Copyright International Organization for Standardization
Provided by IHS Markit under license with ANSI
No reproduction or networking permitted without license from IHS

Order Number: W2233726
Sold to:APTIV [222021100001] - RUTH.M.MONTANO@APTIV.COM,
Not for Resale,2020-08-07 18:02:38 UTC

Table A.337 — Enumeration: Sensor defect detected – Example enumerators

Name	Description	RL enumerator
SensorDefectDetected_SensorFullyFunctional	Sensor has no defects detected.	“exemplary”
SensorDefectDetected_NotFullyFunctionalDueToDefect	Sensor has detected defects. Sensor can measure with limited performance.	“exemplary”
SensorDefectDetected_OutOfOrder	Sensor has detected defects and cannot perform measurements anymore.	“exemplary”

A.5.25 Sensor defect reason

Table A.338 — 269 Signal: Sensor defect reason

Name	Sensor defect reason		
Description	Signal for detailed information why the signal Sensor defect detected (A.5.24) is notifying a sensor problem.		
Value type	enumeration	**Unit**	1

Table A.339 — Enumeration: Sensor defect reason – Example enumerators

Name	Description	RL enumerator
SensorDefectReason_NoDefectDetected	No defects detected by the sensor.	“exemplary”
SensorDefectReason_InternalMemoryError	Sensor has detected an internal memory error.	“exemplary”
SensorDefectReason_ElectronicDefect	Sensor has detected an electric defect.	“exemplary”
SensorDefectReason_ThermalDefect	Sensor has detected a thermal problem error.	“exemplary”
SensorDefectReason_SurgeDefect	Sensor has detected a surge defect.	“exemplary”
SensorDefectReason_CalibrationError	Sensor has detected a calibration error.	“exemplary”
SensorDefectReason_ImplausibleSensorParametrisation	Sensor has detected an implausible parametrisation.	“exemplary”
SensorDefectReason_MechanicalDefect	Sensor has detected a mechanical defect.	“exemplary”
SensorDefectReason_SoftwareDefect	Sensor has detected a software defect.	“exemplary”
SensorDefectReason_ComputingPowerNotSufficient	Sensor has detected a to low power supply.	“exemplary”

© ISO 2020 – All rights reserved

Copyright International Organization for Standardization
Provided by IHS Markit under license with ANSI
No reproduction or networking permitted without license from IHS
Order Number: W2233726
Sold to:APTIV [222021100001] - RUTH.M.MONTANO@APTIV.COM,
Not for Resale,2020-08-07 18:02:38 UTC

SensorDefectReason_OutOfTimeSyncronisation	Sensor has detected an out of time synchronisation.	“exemplary”
SensorDefectReason_SensorExternalDisturbed	Sensor has detected an external disturbance.	“exemplary”

A.5.26 Sensor diagnostic mode

Table A.340 — Signal: Sensor diagnostic mode

Name	Sensor diagnostic mode		
Description	Signal for the current Sensor diagnostic mode (A.5.26).		
Value type	enumeration	**Unit**	1

Table A.341 — Enumeration: Sensor diagnostic mode – Example enumerators

Name	Description	RL enumerator
SensorDiagnosticMode_Idle	Sensor not in diagnostic mode. Sensor in normal operation.	“exemplary”
SensorDiagnosticMode_SensorInEndOfLineMode	End of line alignment in operation.	“exemplary”
SensorDiagnosticMode_SensorInSelfDiagnoseMode	Sensor in self-diagnosis mode, normal sensor operation is not provided.	“exemplary”

A.5.27 Status supply voltage

Table A.342 — Signal: Status supply voltage

Name	Status supply voltage		
Description	Signal for the current Status supply voltage (A.5.27) status.		
Value type	enumeration	**Unit**	1

Table A.343 — Enumeration: Status supply voltage – Example enumerators

Name	Description	RL enumerator
StatusSupplyVoltage_WithinLimits	Supply voltage is optimal.	“exemplary”
StatusSupplyVoltage_Low	Supply voltage is out of valid range. Supply voltage is too low.	“exemplary”
StatusSupplyVoltage_PreLow	Supply voltage still in the valid range, but close to the limit and expected to leave the valid range soon.	“exemplary”
StatusSupplyVoltage_PreHigh	Supply voltage still in the valid range, but close to the limit and expected to leave the valid range soon.	“exemplary”
StatusSupplyVoltage_High	Supply voltage is out of valid range. Supply voltage is too high.	“exemplary”

© ISO 2020 – All rights reserved

Copyright International Organization for Standardization
Provided by IHS Markit under license with ANSI
No reproduction or networking permitted without license from IHS
Order Number: W2233726
Sold to:APTIV [222021100001] - RUTH.M.MONTANO@APTIV.COM,
Not for Resale,2020-08-07 18:02:38 UTC

A.5.28 Sensor temperature status

Table A.344 — Signal: Sensor temperature status

Name	Sensor temperature status		
Description	Signal for the current Sensor temperature status (A.5.28) status.		
Value type	enumeration	**Unit**	1

Table A.345 — Enumeration: Sensor temperature status – Example enumerators

Name	Description	RL enumerator
SensorTemperatureStatus_UnderTemperature	No measurement updates available.	“exemplary”
SensorTemperatureStatus_PreUnderTemperature	Close before under temperature.	“exemplary”
SensorTemperatureStatus_TemperatureInLimits	Normal mode.	“exemplary”
SensorTemperatureStatus_PreOverTemperature	Close before over temperature.	“exemplary”
SensorTemperatureStatus_OverTemperature	No measurement updates available.	“exemplary”

A.5.29 Number of valid sensor input signal statuses

Table A.346 — Signal: Number of valid sensor input signal statuses

Name	Number of valid sensor input signal statuses		
Description	The current Number of valid sensor input signal statuses (A.5.29) for different sensor input signals.		
Value type	[0…] integer value	**Unit**	1

A.5.30 Sensor input signal – type

Table A.347 — Signal: Sensor input signal – type

Name	Sensor input signal – type		
Description	Classification of the Sensor input signal – type (A.5.30), which defines a group of sensor input signals received by the sensor.		
Value type	enumeration	**Unit**	1

Table A.348 — Enumeration: Sensor input signal – type – Example enumerators

Name	Description	RL enumerator
SensorInputSignalType_DynamicMotionControl	Dynamic motion control sensor input signals.	“exemplary”
SensorInputSignalType_VehicleDynamic	Vehicle dynamic sensor input signals.	“exemplary”

© ISO 2020 – All rights reserved

Copyright International Organization for Standardization
Provided by IHS Markit under license with ANSI
No reproduction or networking permitted without license from IHS
Order Number: W2233726
Sold to:APTIV [222021100001] - RUTH.M.MONTANO@APTIV.COM,
Not for Resale,2020-08-07 18:02:38 UTC

A.5.31 Sensor input signal – status

Table A.349 — Signal: Sensor input signal – status

Name	Sensor input signal – status		
Description	Enumeration if valid input signals for Sensor input signal – type (A.5.30) are received by the sensor.		
Value type	enumeration	**Unit**	1

Table A.350 — Enumeration: Sensor input signal – status – Example enumerators

Name	Description	RL enumerator
SensorInputSignalStatus_Valid	Normal mode.	“exemplary”
SensorInputSignalStatus_Implausible	Signal in context of sensor signals is not plausible compared with other signals or internal calculations.	“exemplary”
SensorInputSignalStatus_Missing	Signal was never received.	“exemplary”
SensorInputSignalStatus_OufOfRange	Signal violated the signal range.	“exemplary”
SensorInputSignalStatus_Timeout	Signal was received, however not in time period as expected.	“exemplary”

A.5.32 Sensor external disturbed

Table A.351 — Signal: Sensor external disturbed

Name	Sensor external disturbed		
Description	Signal about the disturbance of the sensor by an external source. Additional information: E.g. radar sensors can be disturbed by other devices that transmit similar emissions (interference). SHII provides a basic qualifier. Detailed information about the effects is provided in the SPI (reduction of range, etc.).		
Value type	Enumeration	**Unit**	1

Table A.352 — Enumeration: Sensor external disturbed – Example enumerators

Name	Description	RL enumerator
SensorExternalDisturbed_FullDisturbance	The sensor is completely disturbed, no more feature and functionality working due to external disturbance.	“exemplary”
SensorExternalDisturbed_DisturbanceHighImpact	The sensor has detected an external disturbance which has a significant impact on sensor performance.	“exemplary”

© ISO 2020 – All rights reserved

Copyright International Organization for Standardization
Provided by IHS Markit under license with ANSI
No reproduction or networking permitted without license from IHS
Order Number: W2233726
Sold to:APTIV [222021100001] - RUTH.M.MONTANO@APTIV.COM,
Not for Resale,2020-08-07 18:02:38 UTC

SensorExternalDisturbed_DisturbanceMediumImpact	The sensor has detected an external disturbance which already has impact on sensor performance.	“exemplary”
SensorExternalDisturbed_DisturbanceLowImpact	The sensor detects that an external disturbance is present or is increasing, but the degree of disturbance has not yet had a significant impact on sensor performance and functionality.	“exemplary”
SensorExternalDisturbed_None	Normal mode.	“exemplary”

A.5.33 Sensor transmit power reduced

Table A.353 — Signal: Sensor transmit power reduced

Name	Sensor transmit power reduced		
Description	Enumeration if the sensor works with full output power. Additional information: E.g. some sensors (lidars or radars) can only use limited/reduced transmit power in standstill/low speed or requested by e.g. the AD system. The power reduction could be part of the sensor strategy to reduce transmit emissions.		
Value type	Enumeration	**Unit**	1

Table A.354 — Enumeration: Sensor transmit power reduced – Example enumerators

Name	Description	RL enumerator
SensorTransmitPowerReduced_NormalOperation	Transmit output power normal.	“exemplary”
SensorTransmitPowerReduced_OutputPowerLimited	Transmit output power reduced.	“exemplary”

A.5.34 Status sensor heating

Table A.355 — Signal: Status sensor heating

Name	Status sensor heating		
Description	Status of the sensor heating.		
Value type	Enumeration	**Unit**	1

© ISO 2020 – All rights reserved

Copyright International Organization for Standardization
Provided by IHS Markit under license with ANSI
No reproduction or networking permitted without license from IHS

Order Number: W2233726
Sold to:APTIV [222021100001] - RUTH.M.MONTANO@APTIV.COM,
Not for Resale,2020-08-07 18:02:38 UTC

Table A.356 — Enumeration: Status sensor heating – Example enumerators

Name	Description	RL enumerator
StatusSensorHeating_HeatingOff	No heating active.	“exemplary”
StatusSensorHeating_HeatingLevel	Sensor heating active.	“exemplary”
StatusSensorHeating_HeatingError	Sensor heating is defect.	“exemplary”

A.5.35 Status sensor cleaning

Table A.357 — Signal: Status sensor cleaning

Name	Status sensor cleaning		
Description	Status of the sensor cleaning.		
Value type	Enumeration	**Unit**	1

Table A.358 — Enumeration: Status sensor cleaning – Example enumerators

Name	Description	RL enumerator
StatusSensorCleaning_CleaningIdle	Sensor cleaning is not active.	“exemplary”
StatusSensorCleaning_CleaningActive	Sensor cleaning is active	“exemplary”
StatusSensorCleaning_CleaningNeeded	Sensor cleaning should be performed.	“exemplary”

A.5.36 Sensor time sync

Table A.359 — Signal: Sensor time sync

Name	Sensor time sync		
Description	Status of the sensor time synchronisation.		
Value type	Enumeration	**Unit**	1

Table A.360 — Enumeration: Sensor time sync – Example enumerators

Name	Description	RL enumerator
SensorTimeSync_WithinLimits	Time synchronization inside limits.	“exemplary”
SensorTimeSync_OutOfLimits	Time synchronization time accuracy limits violated.	“exemplary”
SensorTimeSync_Timeout	Time synchronization timeout elapsed (no valid time synchronization cycle within timeout interval).	“exemplary”
SensorTimeSync_Offset	Time offset value. Requires: Sensor time sync offset value (A.5.37).	“exemplary”

© ISO 2020 – All rights reserved

Copyright International Organization for Standardization
Provided by IHS Markit under license with ANSI
No reproduction or networking permitted without license from IHS

Order Number: W2233726
Sold to:APTIV [222021100001] - RUTH.M.MONTANO@APTIV.COM,
Not for Resale,2020-08-07 18:02:38 UTC

A.5.37 Sensor time sync offset value

Table A.361 — Signal: Sensor time sync offset value

Name	Sensor time sync offset value		
Description	Value of the sensor time synchronisation offset. Additional information: Sensor time sync (A.5.36) := “SensorTimeSync_Offset”. Otherwise Sensor time sync offset value (A.5.37) := 0 or signal is no implemented.		
Value type	real value	**Unit**	s

A.5.38 Number of valid sensor calibratable components

Table A.362 — Signal: Number of valid sensor calibratable components

Name	Number of valid sensor calibratable components		
Description	The current Number of valid sensor calibratable components (A.5.38) for different sensor components which may be calibrated.		
Value type	[0…] integer value	**Unit**	1

A.5.39 Sensor calibratable component

Table A.363 — Signal: Sensor calibratable component

Name	Sensor calibratable component		
Description	Enumeration for the sensor component which may be calibrated.		
Value type	enumeration	**Unit**	1

Table A.364 — Enumeration: Sensor calibratable component – Example enumerators

Name	Description	RL enumerator
SensorCalibratableComponent_Intrinsic	Calibration status for the intrinsic parameters of the sensor.	“exemplary”
SensorCalibratableComponent_Extrinsic	Calibration status for the extrinsic parameters of the sensor.	“exemplary”
SensorCalibratableComponent_Online	Calibration status for the online parameters of the sensor.	“exemplary”

© ISO 2020 – All rights reserved

Copyright International Organization for Standardization
Provided by IHS Markit under license with ANSI
No reproduction or networking permitted without license from IHS
Order Number: W2233726
Sold to:APTIV [222021100001] - RUTH.M.MONTANO@APTIV.COM,
Not for Resale,2020-08-07 18:02:38 UTC

A.5.40 Sensor calibration status

Table A.365 — Signal: Sensor calibration status

Name	Sensor calibration status		
Description	Enumeration for the current calibration status of the Sensor calibratable component (A.5.39).		
Value type	enumeration	**Unit**	1

Table A.366 — Enumeration: Sensor calibration status – Example enumerators

Name	Description	RL enumerator
SensorCalibrationStatus_Calibrated	Sensor calibration was successful and within nominal tolerance range.	"exemplary"
SensorCalibrationStatus_NotCalibrated	Calibration not done or calibration failed.	"exemplary"
SensorCalibrationStatus_Degraded	Sensor calibrated, however performance degraded due to limited correction accuracy.	"exemplary"
SensorCalibrationStatus_InitialCalibrationNotPerformed	Sensor initial calibration not performed yet.	"exemplary"
SensorCalibrationStatus_InitialCalibrationFailed	Sensor initial calibration process failed.	"exemplary"
SensorCalibrationStatus_RecalibrationNeededIntrinsic	Recalibration of sensor's intrinsic parameters required.	"exemplary"
SensorCalibrationStatus_RecalibrationNeededExtrinsic	Recalibration of sensor's extrinsic parameters required.	"exemplary"
SensorCalibrationStatus_RecalibrationNeededFull	Recalibration of the complete sensor's parameters required.	"exemplary"

A.5.41 Correction origin position {x, y, z}

Table A.367 — Signal: Correction origin position {x, y, z}

Name	Correction origin position {x, y, z}		
Description	Correction of the mounting position w.r.t. the nominal position. Correction is determined by e.g. internal calibration. Additional information: Sensor origin position {x, y, z} (A.1.21) includes Correction origin position {x, y, z} (A.5.41).		
Value type	3D vector real value	**Unit**	(m, m, m)

© ISO 2020 – All rights reserved

Copyright International Organization for Standardization
Provided by IHS Markit under license with ANSI
No reproduction or networking permitted without license from IHS

Order Number: W2233726
Sold to:APTIV [222021100001] - RUTH.M.MONTANO@APTIV.COM,
Not for Resale,2020-08-07 18:02:38 UTC

A.5.42 Correction origin position – error {x, y, z}

Table A.368 — Signal: Correction origin position – error {x, y, z}

Name	Correction origin position – error {x, y, z}		
Description	Estimated error of the mounting position correction (Correction origin position {x, y, z} (A.5.41)) by e.g. internal calibration.		
Value type	3D vector real value	**Unit**	(m, m, m)

A.5.43 Correction position – limit minimum {x, y, z}

Table A.369 — Signal: Correction position – limit minimum {x, y, z}

Name	Correction position – limit minimum {x, y, z}		
Description	Limits of position corrections. Minimum positions could be defined for each axis {x, y, z}.		
Value type	3D vector real value	**Unit**	(m, m, m)

A.5.44 Correction position – limit maximum {x, y, z}

Table A.370 — Signal: Correction position – limit maximum {x, y, z}

Name	Correction position – limit maximum {x, y, z}		
Description	Limits of position corrections. Maximum positions could be defined for each axis {x, y, z}.		
Value type	3D vector real value	**Unit**	(m, m, m)

A.5.45 Correction orientation {yaw, pitch, roll}

Table A.371 — Signal: Correction orientation {yaw, pitch, roll}

Name	Correction orientation {yaw, pitch, roll}		
Description	Correction of the mounting position orientation w.r.t. the nominal orientation. Correction is determined by e.g. internal calibration. Additional information: Sensor orientation {yaw, pitch, roll} (A.1.23) includes Correction orientation {yaw, pitch, roll} (A.5.45).		
Value type	3D vector real value	**Unit**	(rad, rad, rad)

© ISO 2020 – All rights reserved

Copyright International Organization for Standardization
Provided by IHS Markit under license with ANSI
No reproduction or networking permitted without license from IHS

Order Number: W2233726
Sold to:APTIV [222021100001] - RUTH.M.MONTANO@APTIV.COM,
Not for Resale,2020-08-07 18:02:38 UTC

A.5.46 Correction orientation – error {yaw, pitch, roll}

Table A.372 — Signal: Correction orientation – error {yaw, pitch, roll}

Name	Correction orientation – error {yaw, pitch, roll}		
Description	Estimated error of the mounting orientation correction (Correction orientation {yaw, pitch, roll} (A.5.45)) by e.g. internal calibration.		
Value type	3D vector real value	**Unit**	(rad, rad, rad)

A.5.47 Correction angle – limit minimum {yaw, pitch, roll}

Table A.373 — Signal: Correction angle – limit minimum {yaw, pitch, roll}

Name	Correction angle – limit minimum {yaw, pitch, roll}		
Description	Limits of angle corrections. Minimum angles could be defined for each angle {yaw, pitch, roll}.		
Value type	3D vector real value	**Unit**	(rad, rad, rad)

A.5.48 Correction angle – limit maximum {yaw, pitch, roll}

Table A.374 — Signal: Correction angle – limit maximum {yaw, pitch, roll}

Name	Correction angle – limit maximum {yaw, pitch, roll}		
Description	Limits of angle corrections. Maximum angles could be defined for each angle {yaw, pitch, roll}.		
Value type	3D vector real value	**Unit**	(rad, rad, rad)

© ISO 2020 – All rights reserved

Copyright International Organization for Standardization
Provided by IHS Markit under license with ANSI
No reproduction or networking permitted without license from IHS

Order Number: W2233726
Sold to:APTIV [222021100001] - RUTH.M.MONTANO@APTIV.COM,
Not for Resale,2020-08-07 18:02:38 UTC

Annex B
(normative)

Options and constraints

This clause defines generic constraints for requirement levels and options of LSG resp. signals.

B.1 Options for interface optimization

A definition of alternative implementations of a defined interface.

B.1.1 List length optimization

If the number of list elements is fix, the signal Number of valid <…> (A.1.11) is not mandatory anymore. Unused list elements shall be marked as invalid, i.e. by an additional, mandatory signal e.g. “entity is valid”.

This measure could be combined with Alternative representation optimization (B.1.3).

B.1.2 Redundancy optimization

If a signal can be calculated from one or more other signals by a mathematical formula, the signal can be omitted.

EXAMPLE 1 The signal Cycle counter (A.1.5.1) of an interface message can be derived from the time stamp of the measurement if the interface’s start time and the time interval between two sequential single measurements are known.

EXAMPLE 2 The signal Observation – object level (A.2.4) could be calculated of the entity’s existence in the previous transferred (e.g. 32 cycles) messages. The precondition is that the entity always has the same ID for the observed time.

B.1.3 Alternative representation optimization

As an alternative representation for values or value ranges, an index signal in combination with a lookup table can be used instead of the values or value ranges themselves.

EXAMPLE 1 Angle elevation, Angle azimuth → index to angle elevation and/or angle azimuth that refers to angles in a lookup table.

EXAMPLE 2 Horizontal angle {begin, end} (A.5.1) and Vertical angle {begin, end} (A.5.2) → index to horizontal and/or vertical angle range that refers to angle range in a lookup table.

This measure could be combined with Implicit values (B.1.4). The index can be omitted if the index can be derived implicitly from the position of the entity in a list.

EXAMPLE 3 The sensor can detect no or exact one entity at a fixed angle combination. The sensor has a fixed grid of angle combinations. Therefore, the number of possible entities and the angle grid (angle azimuth and angle elevation) are fixed. The index of the entity in the list could define the measurement angle of the entity.

© ISO 2020 – All rights reserved

Copyright International Organization for Standardization
Provided by IHS Markit under license with ANSI
No reproduction or networking permitted without license from IHS

Order Number: W2233726
Sold to:APTIV [222021100001] - RUTH.M.MONTANO@APTIV.COM,
Not for Resale,2020-08-07 18:02:38 UTC

B.1.4 Implicit values

Values that are implicitly known at the sensor and the fusion unit do not have to be transferred. The values shall be defined during the system design phase.

EXAMPLE 1 When the relationship of the list position of an element is always associated statically with the same geometric direction in space.

EXAMPLE 2 If a signal is not measured or does not occur in the measurement method used, the same value is always sent. An example is the time stamp difference of each detection within the measurement. If all detections are measured in parallel, the time difference is zero. The signal time stamp difference can be omitted in this case.

EXAMPLE 3 When the relationship of the list position of an element is always associated statically with the same entry of a referred lookup table.

B.1.5 Unrolling tuple-lists

This measure combines List length optimization (B.1.1), Alternative representation optimization (B.1.3) and Implicit values (B.1.4).

If a dynamic list of tuples (e.g. type and values) always contains the same count of tuples and these tuples always use the same order of the types, the list can be expanded and only the values can be transferred. Here, the assignment and ordering of the types shall be implicitly known and shall be defined during the system design phase.

EXAMPLE If a probability is specified for each possible object classification, the sensor can only transfer the probability values for these classes for a fixed number of classifications (e.g. pedestrian, car, bicycle, etc.). It shall be implicitly known that the first probability corresponds to the probability pedestrian, the second probability applies to a car, etc.

DEFINITION Key: <enumeration signal name[10]>

B.2 Requirement level conditional reasons

A definition of constraints for conditional requirement levels of signals, LSG, signal's identifier or signal's enumerator.

B.2.1 Sensor technology specific conditional requirements

A signal or LSG becomes mandatory, if the considered sensor is capable to provide the requested information. Other sensor technologies may or may not provide the signal resp. LSG. If a sensor provides the signal resp. LSG then the requirement level status conditional becomes mandatory.

DEFINITION[11] Relevant: <sensor technology>

[10] Each enumerator may at most occur once in the list.

[11] Optional

© ISO 2020 – All rights reserved

Copyright International Organization for Standardization
Provided by IHS Markit under license with ANSI
No reproduction or networking permitted without license from IHS
Order Number: W2233726
Sold to:APTIV [222021100001] - RUTH.M.MONTANO@APTIV.COM,
Not for Resale,2020-08-07 18:02:38 UTC

B.2.2 Signal dependencies

Signals must be available when other optional signals are provided by the implementation of the interface.

EXAMPLE If object height is an optional signal and there is another signal for the measurement error of height, then the measurement error is always specified as soon as the signal height is implemented by the interface. However, the measurement error must not be implemented by the interface if the height signal is not implemented.

DEFINITION Signal: <dependent signal name>

B.2.3 Multiple entity lists for one interface

An interface provides more than one list for different entity types. A sensor must provide at least one entity list per interface.

EXAMPLE The road object interface provides e.g. road markings and road boundaries. A sensor may provide only road markings and no road boundaries (i.e. no LSG road boundaries, etc.).

B.3 Cross interface optimization

In this part common dependencies are defined, which can occur between two or more interfaces of a sensor.

B.3.1 Link between interfaces

The implementation of interfaces is optional. If an interface's entity is linked to an entity of a second interface, the link must only be available if both interfaces are provided by the sensor.

DEFINITION Exist: <necessary interface>

B.3.2 Assignment of information to one interface

If a signal resp. LSG can be associated to different interfaces, the signal/LSG is only defined and implemented by one interface. The alternative implementation in a second, third, etc. interface is not shown.

EXAMPLE Each detections provides an Object ID reference – feature level (A.3.3) that describes the logical relationship between detections on DLI and objects on OLI. This relation is a 1:n relation, i.e. each detection refers to one object with the highest probability, but one object can consist of several detections.

Alternative implementations:

ALTERNATIVE 1 This relation can be implemented in a separate third interface if DLI interfaces provide a Detection ID, OLI interfaces provide an Object ID and a third interface provides a list of Object ID references and Detection ID references.

ALTERNATIVE 2 This relation 1:n can also be implemented inverted between the two interfaces. Each DLI interface detection provides a Detection ID and each OLI interface object provides a list of Detection ID references.

B.3.3 Need of logical signal group

If an LSG is important for several interfaces, this document defines the LSG in one interface. Since it is allowed that an interface can be omitted (each interface is optional), it could happen that a relevant LSG

© ISO 2020 – All rights reserved

Copyright International Organization for Standardization
Provided by IHS Markit under license with ANSI
No reproduction or networking permitted without license from IHS
Order Number: W2233726
Sold to:APTIV [222021100001] - RUTH.M.MONTANO@APTIV.COM,
Not for Resale,2020-08-07 18:02:38 UTC

would be omitted. Since this is not allowed for a relevant LSG, this LSG is implemented by at least another predefined interface.

It is also allowed that the LSG is provided by several interfaces in parallel (and therefore redundantly).

EXAMPLE The SHII's LSG Calibration and the calibration state of the sensor is important for the interpretation of detections. If SHII is not implemented by the sensor, the LSG Calibration must be implemented in another interface. The order of the interfaces which implement the LSG:

1) SPI Header information

2) DLI Header information

3) FLI Header information

4) Redundant on OLI Header information

The LSG Calibration could be implemented e.g. by SHII and DLI and all OLI of one sensor.

DEFINITION Need <ordered list of interface(s)>

B.4 Cross interface definition

In this part common definitions are defined, which are valid for all interfaces of a sensor.

B.4.1 Error model implementation

Properties of an entity (e.g. object position, object colour, etc.) might be measured. The measured signal includes errors with causes such as sensor noise, quantization effects, systematic offset, drifts, etc. The challenge is to estimate the property's true value with the help of the observations. Therefore, the knowledge of the total sensor error, so called accuracy (consisting of trueness bias value and precision error), is required for proper association of observations with the prediction (tracking) of fusion models.

The error model can be a complex model which cannot be covered only by statistical data from current measurement variations. Moreover, information to the measurement trueness needs to be added to describe the sensor error. Measurement trueness describes the average offset versus ground truth (so called bias) and requires a validation against a highly accurate reference system. Trueness cannot be derived from measurement values of the sensor itself.

© ISO 2020 – All rights reserved

Copyright International Organization for Standardization
Provided by IHS Markit under license with ANSI
No reproduction or networking permitted without license from IHS
Order Number: W2233726
Sold to:APTIV [222021100001] - RUTH.M.MONTANO@APTIV.COM,
Not for Resale,2020-08-07 18:02:38 UTC

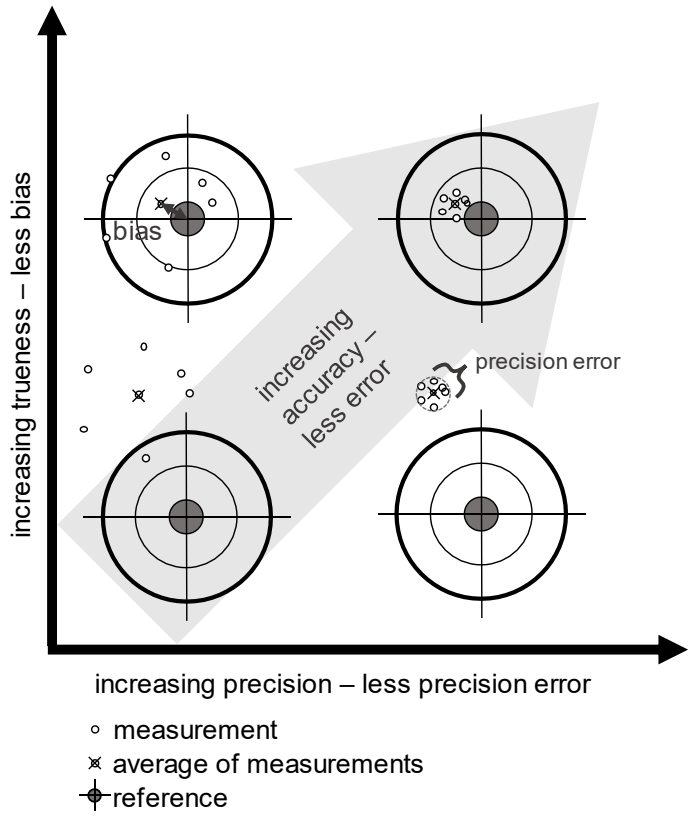

Figure B.1 — Error classes using four examples

Trueness and precision can be described by same statistical models. All sensor interfaces shall use the same error value calculation method and a classification of the error according to its sources. Each interface uses the same error model for its signals.

B.4.1.1 Measurements statistics

When measuring (i.e. historical values or blurred measurement), the user is interested in getting knowledge of a physical property. If a set of independent theoretical measurements of a specific physical property was performed with different or the same sensors, the sensor would not always obtain the same value for that property. Instead, the sensor would observe that the values are, in general, distributed around a certain value and may as well have an offset to its true (ground truth) value. Out of the measurements, which are denoted as $\{x_1, \dots, x_N\}$, a histogram can be built.

A histogram is a 2D plot in which the X-axis includes the values, or classes of values, representing the observed measurements. Its Y-axis includes the frequency each value or class of values was observed. If sensors are good and measure a well-defined magnitude, it is expected that many measurements appear close to a well-defined value or class. This behaviour is called central tendency. Since the sensor will not be perfect, the distance of the measurements to the well-defined value or class will be different from measurement to measurement. This behaviour is called dispersion.

The idea behind the construction of a histogram is to approximate, from the measurements, the theoretical population distribution corresponding to the process of measuring with that sensor. This population distribution would be useful in the computation of probabilities associated to some measurement values. The complete determination of the population distribution would be impossible in practice, since infinite measurements would be required. Typically, the population distribution of the measurements follows a normal distribution.

Copyright International Organization for Standardization
Provided by IHS Markit under license with ANSI
No reproduction or networking permitted without license from IHS
Order Number: W2233726
Sold to:APTIV [222021100001] - RUTH.M.MONTANO@APTIV.COM,
Not for Resale,2020-08-07 18:02:38 UTC

The next subclauses propose different methods in order to define the value of a signal and the corresponding measurement error value.

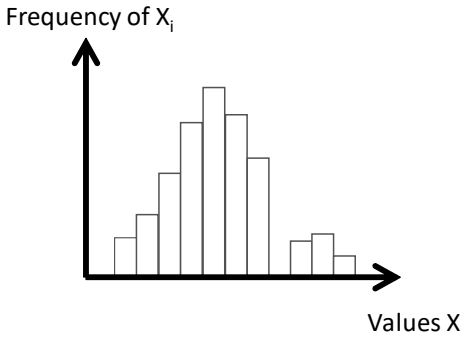

Figure B.2 — Histogram

B.4.1.2 Signal values and associated error value calculation method

In order to assess value of a signal and its associated error value from measured data, there are different possibilities to define statistical estimators for both quantities.

Depending on the definition of the mean average this statistical concept can be applied to precision statistics and as well to trueness statistics. For trueness statistics the reference for the mean value is the ground truth from a known reference system. Usually series vehicles are not equipped with additional equipment as reference system and therefore, the statistical mean can only refer to the mean of the acquired measurements. In that case the statistical model provides only precision statistics without information to the sensor trueness.

B.4.1.2.1 Signal value as sample mean, error value as sample standard deviation

If it is assumed that the measurement error is independent of the actual value of the measured physical property, then it makes sense to consider N different measurements $\{x_1, \dots, x_N\}$ and determine the signal value as the sample mean $\bar{x}$. Further, the signal error can be determined as the sample standard deviation s.

Table B.1 — Estimator names and formulas for the signal value and error

	Estimator name	Symbol and formula
Signal value	Sample mean	$\bar{x} = \frac{1}{N}\sum_{i=1}^{N} x_i$
Signal error	Sample standard deviation	$s = \sqrt{\frac{1}{N-1}\sum_{i=1}^{N}(x_i - \bar{x})^2}$

These estimators have the property of being what statisticians call the “maximum likelihood” estimators for, respectively, the mean and the standard deviation of the whole population distribution. This means that, according to a widely accepted criterion, these are the best estimators of these magnitudes. Moreover, the more samples are considered, the closer these estimators get to the corresponding values.

Some other remarkable properties of these estimators can be summarized as:

© ISO 2020 – All rights reserved

Copyright International Organization for Standardization
Provided by IHS Markit under license with ANSI
No reproduction or networking permitted without license from IHS
Order Number: W2233726
Sold to:APTIV [222021100001] - RUTH.M.MONTANO@APTIV.COM,
Not for Resale,2020-08-07 18:02:38 UTC

— The sample mean does not necessarily coincide with a measured value. It doesn't even need to be valid for a measurement.

— If the population distribution of the signal is assumed to be normal, the knowledge of $\bar{x}$ and s allows the computation of the probability of obtaining a measurement within the interval $[\bar{x} - ks, \bar{x} + ks]$, for some positive number k.

— The presence of outliers can affect the computation of $\bar{x}$ and s. The statistician might have to eliminate suspicious samples before proceeding to computations.

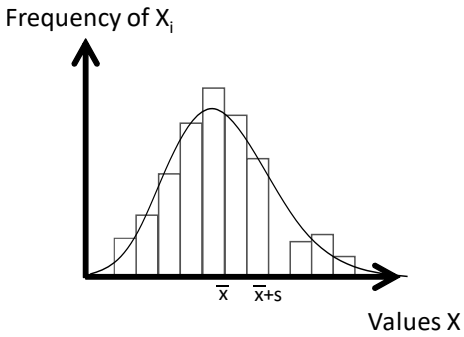

Figure B.3 — Median and standard deviation

B.4.1.2.2 Signal value as the sample median and error value as the interquartile range (IQR)

Another method to define the signal value would be to consider the sample median v of the N measurements $\{x_1, \dots, x_N\}$ as the signal value and let the interquartile range denote the signal error.

In order to determine the sample median, the measurements are firstly sorted in ascending order. If N is odd, the value x_j falling exactly in the middle of the sorted list is the median v. If is even, there are different rules to determine the median. The median is also known as the 0.5-quantile. This means that the median is a value of the sample so that it is greater than or equal exactly the half (i.e. 0.5) of the N sample values considered. Analogously, one can obtain the any q-quantile Q_q as e.g. $Q_q = x_{\lfloor qN+0,5 \rfloor}$.

In order to define the interquartile range IQR, the 0.25-quantile $Q_{0.25}$ and the 0.75-quantile $Q_{0.75}$ are determined using the same sorted list as before. The IQR is given by the formula $\mathrm{IQR} = Q_{0.75} - Q_{0.25}$.

Table B.2 — Estimator names and formulas for the signal value and error

	Estimator name	Symbol and formula
Signal value	Sample median	$v = Q_{0.5}$
Signal error	Sample interquartile range (IQR)	$\mathrm{IQR} = Q_{0.75} - Q_{0.25}$

The median exhibits some convenient properties:

© ISO 2020 – All rights reserved

Copyright International Organization for Standardization
Provided by IHS Markit under license with ANSI
No reproduction or networking permitted without license from IHS
Order Number: W2233726
Sold to:APTIV [222021100001] - RUTH.M.MONTANO@APTIV.COM,
Not for Resale,2020-08-07 18:02:38 UTC

— If the formulas are used (see Table B.2 — Estimator names and formulas for the signal value and error), then the median always corresponds to an observed value.

— If the population distribution of the signal is assumed normal, there will be a well-known relationship between the IQR and the probability of obtaining a measurement within an interval of width IQR centred on the median (i.e. $[Q_{0.5} - 0.5 \cdot \mathrm{IQR}, Q_{0.5} + 0.5 \cdot \mathrm{IQR}]$).

— Both $Q_{0.5}$ the IQR are not affected by isolated outliers.

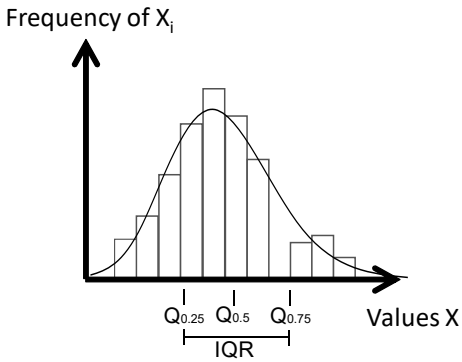

Figure B.4 — Quartiles and IQR

B.4.1.2.3 Customized error value calculation method

The error value calculation method shall be defined during the system design phase and it applies to all the sensor's interfaces.

B.4.1.3 Error value classification method

Error values can have different sources. If the error value can be divided into classes, the contribution of each class may be estimated. The signal with the error model defines the RL information for the error values. The RL for additional error values, e.g. correlated values or additional classes, of the error model will be defined in the following classification method.

B.4.1.3.1 Accuracy error value

The error value is not further subdivided. One error value calculation method for accuracy is used (see Figure B.1 — Error classes).

The signal's RL defines the requirements upon this error value.

B.4.1.3.2 Trueness and precision error values

For each signal-value there are two error values of different sources. One describes the precision error and the other describes the bias (see Figure B.1 — Error classes). Both error sources, each characterized by a class are calculated with the same error calculation method. Bias calculation method requires an association of measurements between different observations. In cases objects or features are classified this can be usually calculated.

The trueness bias value may be subdivided due to different sources, e.g. sensor error, calibration error, coordinate transformation error, etc. and the specific amount of the bias for each class is transferred by separated values.

 © ISO 2020 – All rights reserved

Copyright International Organization for Standardization
Provided by IHS Markit under license with ANSI
No reproduction or networking permitted without license from IHS
Order Number: W2233726
Sold to:APTIV [222021100001] - RUTH.M.MONTANO@APTIV.COM,
Not for Resale,2020-08-07 18:02:38 UTC

The signal's RL defines only the requirements for Accuracy error value (B.4.1.3.1). All error classes of this method are affected on the same way by the defined RL.

EXAMPLE A signal Position - error {x, y, z} has the RL {M, M, O}. A sensor with error model Trueness and precision error values (B.4.1.3.2) implements two error signals: Position – bias {x, y, z} with RL {M, M, O} and Position – precision error {x, y, z} with RL {M, M, O}.

B.4.1.3.3 Variant and covariant error values

Independent error values (i.e. independent of other signal values) are calculated and error values that are dependent upon other error values are calculated. For this purpose, variances for the independent error values and covariances for the dependent error values are used.

Fusion models (trackers) as e.g. Kalman filters also calculate covariances from observations (measurements). Therefore, covariances may be redundant information for the fusion. This statement is only valid for DLI.

The signal's RL defines only the requirements for Accuracy error value (B.4.1.3.1). The RL will define the requirements for the variances. Covariances are always optional.

EXAMPLE A signal Position - error {x, y, z} has the RL {M, M, O}. A sensor with error model Variant and covariant error values (B.4.1.3.3) implements one error signal: Position – error $\begin{Bmatrix} xx & xy & xz \\ yx & yy & yz \\ zx & zy & zz \end{Bmatrix}$ with RL $\begin{Bmatrix} \mathrm{M} & \mathrm{O} & \mathrm{O} \\ \mathrm{O} & \mathrm{M} & \mathrm{O} \\ \mathrm{O} & \mathrm{O} & \mathrm{O} \end{Bmatrix}$.

B.4.1.3.4 Customized error value classification method

The semantic partitioning of the error values shall be defined during the system design phase and it applies to all the sensor's interfaces.

The RL defines only the requirements for Accuracy error value (B.4.1.3.1). Customized error value classes are affected on a defined way. It is defined by the sensor manufacturer during the system design phase.

© ISO 2020 – All rights reserved

Copyright International Organization for Standardization
Provided by IHS Markit under license with ANSI
No reproduction or networking permitted without license from IHS

Order Number: W2233726
Sold to:APTIV [222021100001] - RUTH.M.MONTANO@APTIV.COM,
Not for Resale,2020-08-07 18:02:38 UTC

Bibliography

[1] ISO 6707-1:2017(en), *Buildings and civil engineering works — Vocabulary — Part 1: General terms*

[2] ISO 8855:2011(E), *Road vehicles — Vehicle dynamics and road-holding ability — Vocabulary*

[3] ISO/IEC 11179-3:2013(E), *Information technology — Metadata registries (MDR) — Part 3: Registry metamodel and basic attributes*

[4] ISO 11270:2014(E), *Intelligent transport systems — Lane keeping assistance systems (LKAS) — Performance requirements and test procedures*

[5] ISO/CIE 11664-4:2019(E), *Colorimetry – Part 4: CIE 1976 L*a*b* colour space*

[6] ISO 80000-1:2013(E), *Quantities and units — Part 1: General*

[7] ISO 80000-2:2013(E), *Quantities and units — Part 2: Mathematics*

[8] ISO 3864-1:2011(en), *Graphical symbols — Safety colours and safety signs — Part 1: Design principles for safety signs and safety markings*

[9] ISO/IEC Guide 99:2007(en), *International vocabulary of metrology — Basic and general concepts and associated terms (VIM)*

[10] ISO 5725-1:1994(en), *Accuracy (trueness and precision) of measurement methods and results — Part 1: General principles and definitions*

© ISO 2020 – All rights reserved

Copyright International Organization for Standardization
Provided by IHS Markit under license with ANSI
No reproduction or networking permitted without license from IHS

Order Number: W2233726
Sold to:APTIV [222021100001] - RUTH.M.MONTANO@APTIV.COM,
Not for Resale,2020-08-07 18:02:38 UTC