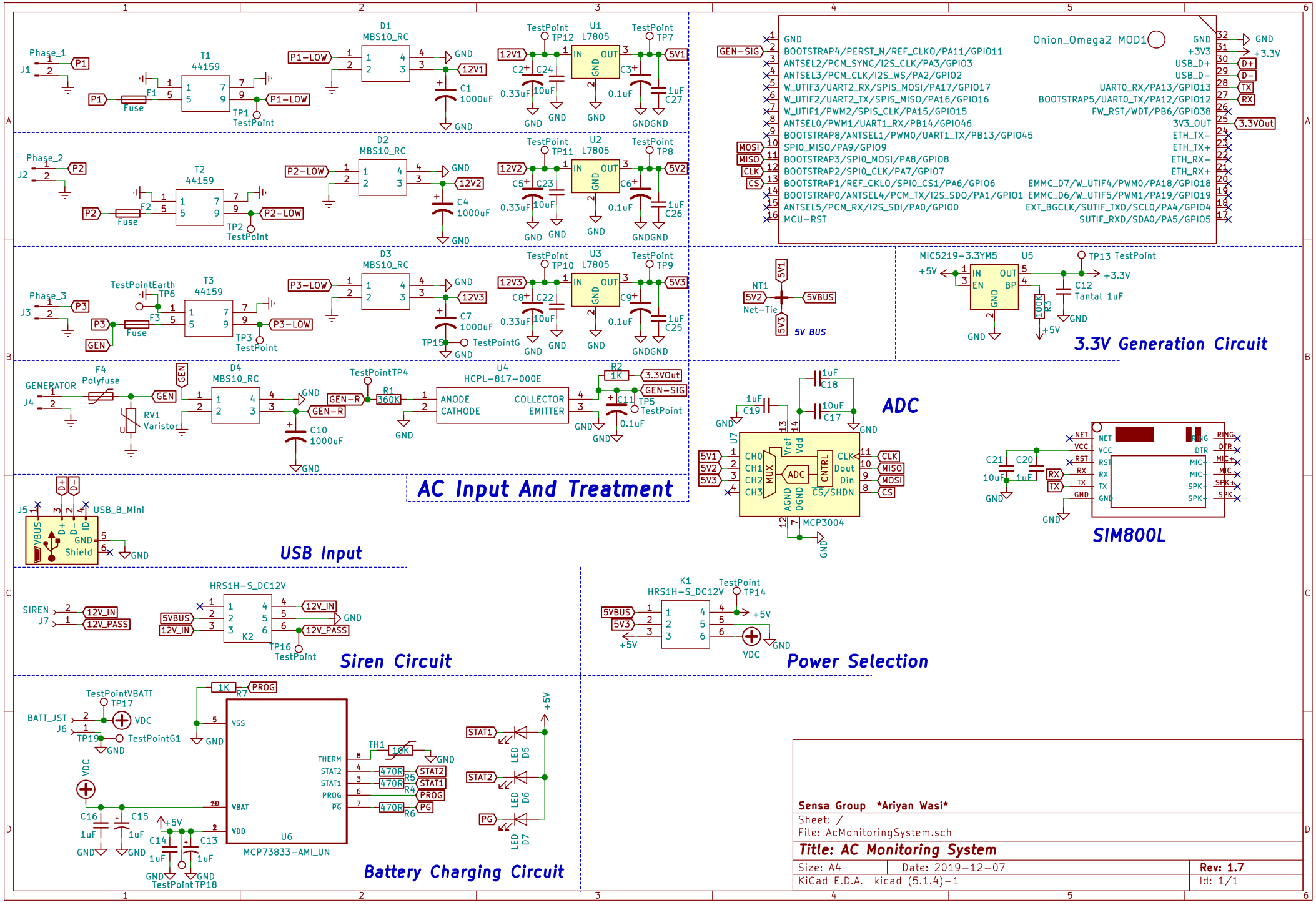
AC Input And Treatment
3.3V Generation Circuit
ADC
SIM800L
USB Input
Siren Circuit
Power Selection
Battery Charging Circuit
Phase_1
Phase_2
Phase_3
T1 44159
T2 44159
T3 44159
D1 MBS10_RC
D2 MBS10_RC
D3 MBS10_RC
D4 MBS10_RC
U1 L7805
U2 L7805
U3 L7805
U4 HCPL-817-000E
U5 MIC5219-3.3YM5
U7 MCP3004
Onion_Omega2 MOD1
5V BUS
Net-Tie
GENERATOR
F4 Polyfuse
RV1 Varistor
USB_B_Mini
HRS1H-S_DC12V
K1 HRS1H-S_DC12V
K2 HRS1H-S_DC12V
MCP73833-AMI_UN
U6
Sensa Group *Ariyan Wasi*
Sheet: /
File: AcMonitoringSystem.sch
Title: AC Monitoring System
Size: A4
Date: 2019-12-07
Rev: 1.7
KiCad E.D.A. kicad (5.1.4)-1
Id: 1/1