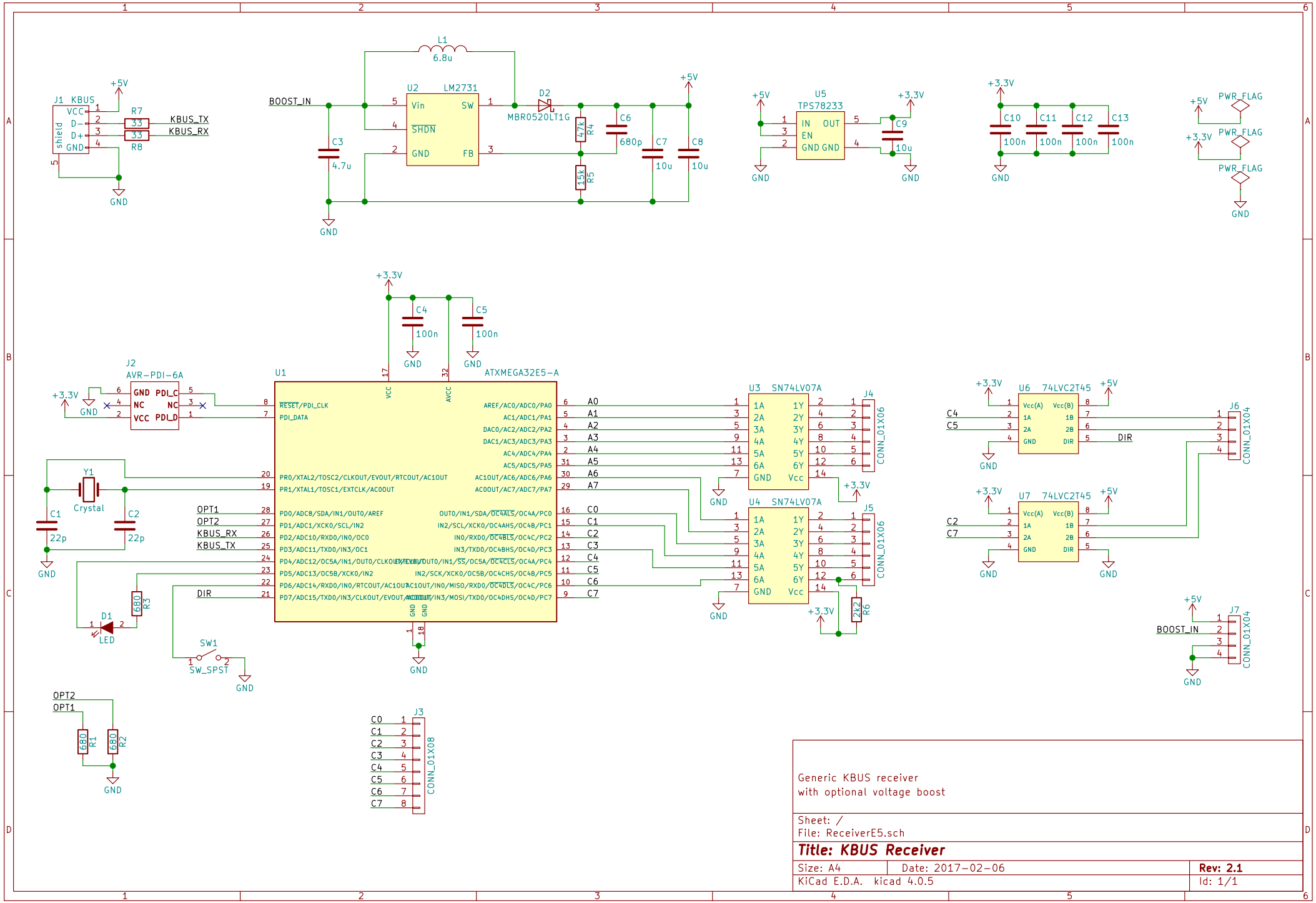

Generic KBUS receiver
with optional voltage boost

Sheet: /
File: ReceiverE5.sch

Title: KBUS Receiver

Size: A4	Date: 2017-02-06	Rev: 2.1
KiCad E.D.A. kicad 4.0.5		Id: 1/1