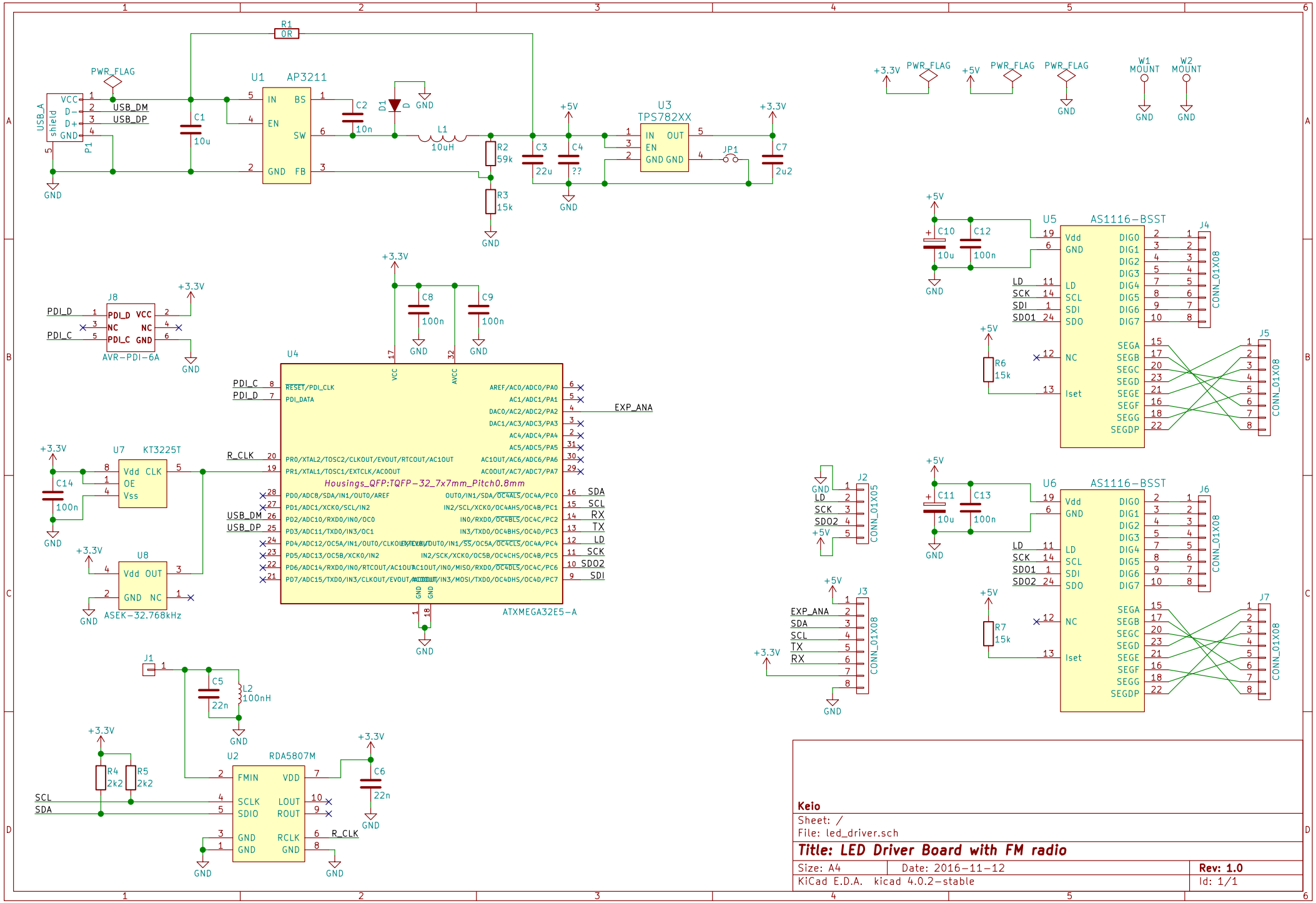

Keio

Sheet: /

File: led_driver.sch

Title: LED Driver Board with FM radio

Size: A4	Date: 2016-11-12	**Rev: 1.0**
KiCad E.D.A. kicad 4.0.2-stable		Id: 1/1