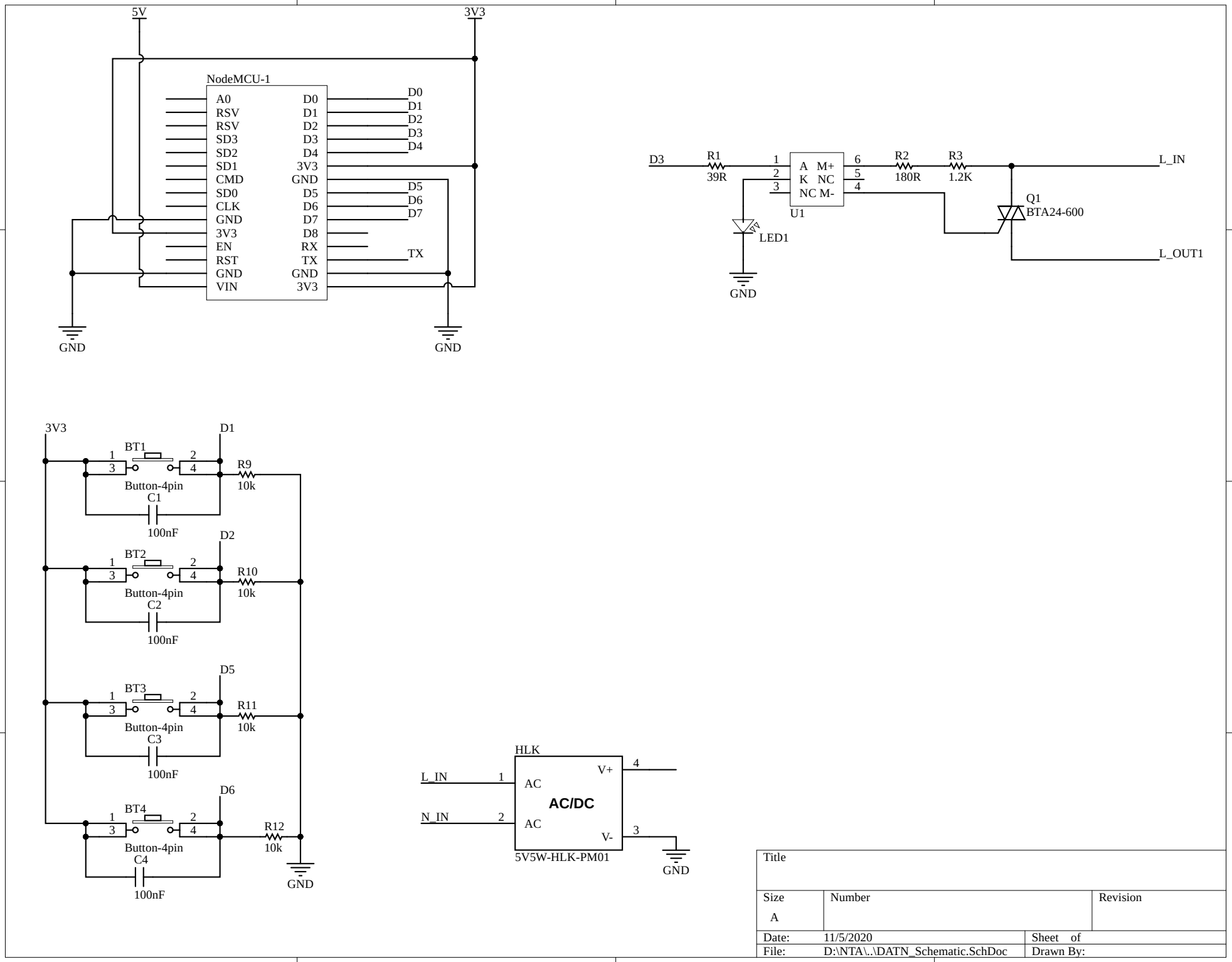

Title		
Size A	Number	Revision
Date: 11/5/2020		Sheet of
File: D:\NTA\..\DATN_Schematic.SchDoc		Drawn By: