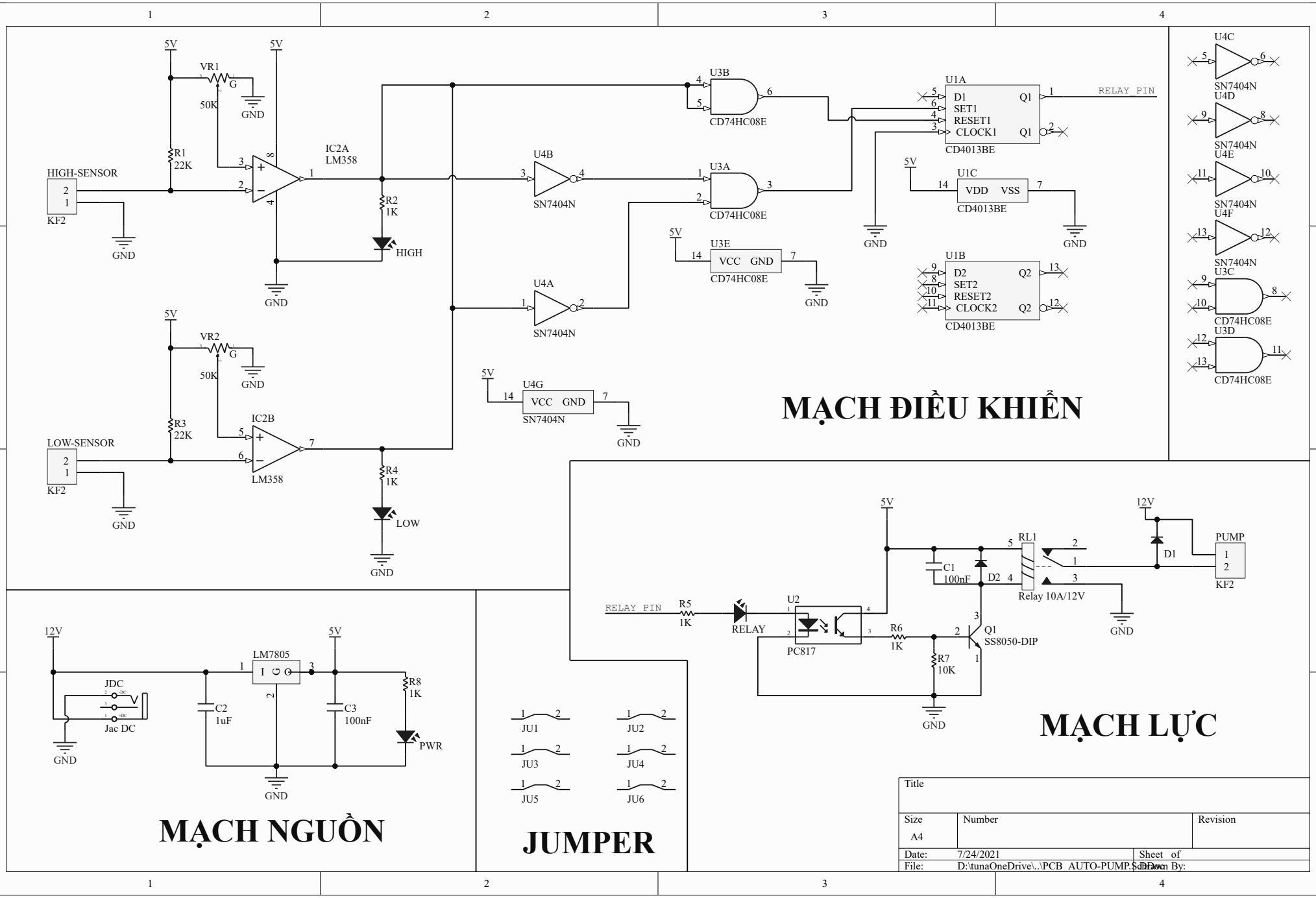
MẠCH ĐIỀU KHIỂN
MẠCH LỰC
MẠCH NGUỒN
JUMPER
HIGH-SENSOR
LOW-SENSOR
KF2
VR1
VR2
50K
R1
22K
R2
1K
R3
22K
R4
1K
IC2A
LM358
IC2B
LM358
HIGH
LOW
U3B
CD74HC08E
U3A
CD74HC08E
U3E
CD74HC08E
U4B
SN7404N
U4A
SN7404N
U4G
SN7404N
U1A
CD4013BE
U1B
CD4013BE
U1C
CD4013BE
RELAY_PIN
U4C
U4D
U4E
U4F
U3C
U3D
CD74HC08E
RL1
Relay 10A/12V
PUMP
D1
D2
C1
100nF
R5
1K
RELAY
U2
PC817
R6
1K
R7
10K
Q1
SS8050-DIP
LM7805
JDC
Jac DC
C2
1uF
C3
100nF
R8
1K
PWR
JU1
JU2
JU3
JU4
JU5
JU6
5V
12V
GND
Title
Size
A4
Number
Revision
Date: 7/24/2021
Sheet of
File: D:\tunaOneDrive\..\PCB_AUTO-PUMP.SchDoc
Drawn By: