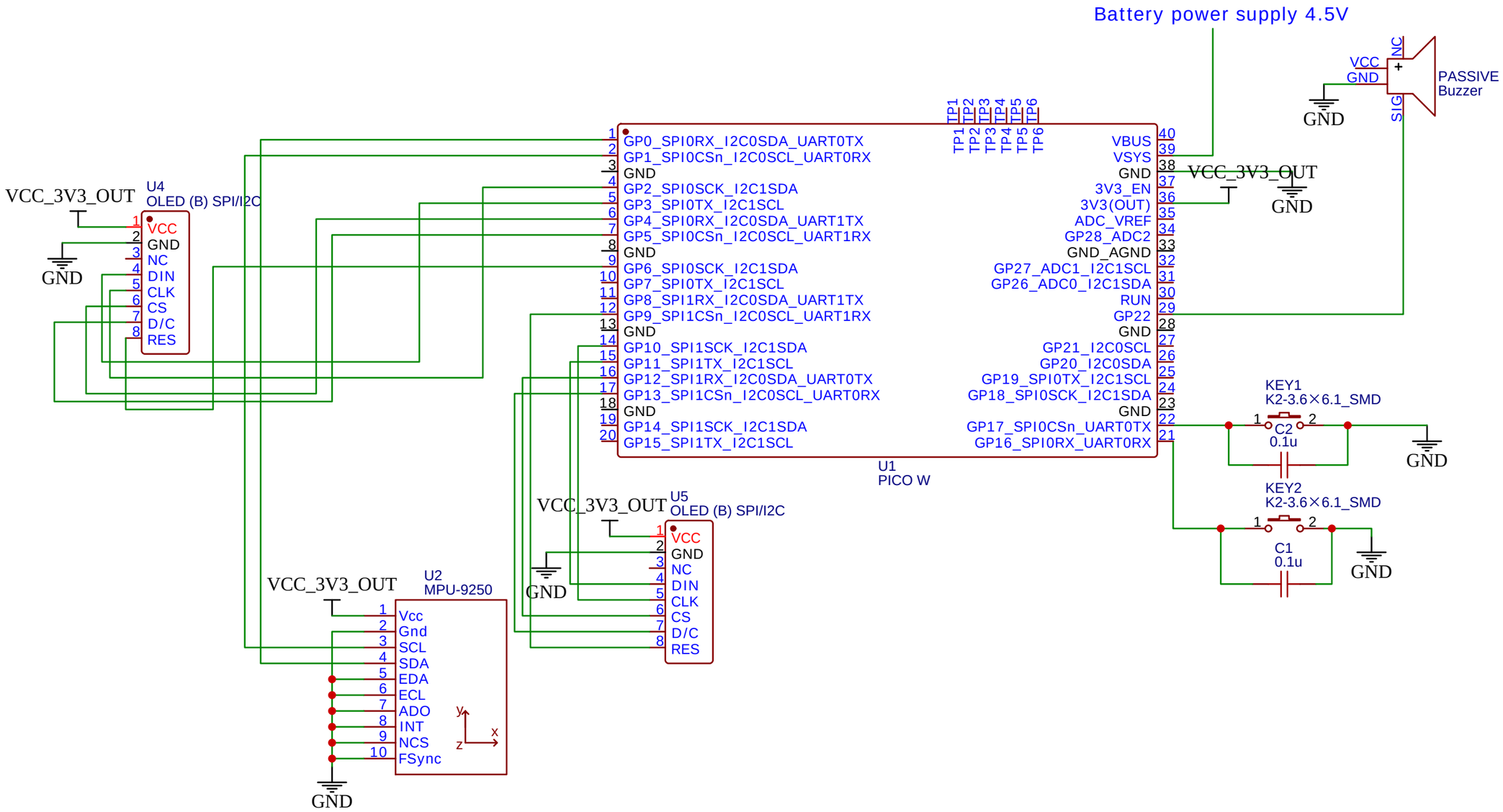

TITLE: HabCube	REV: 4.0
Company: Grupa 3	Sheet: 1/1
Date: 2025-10-14 Drawn By: pkurek	