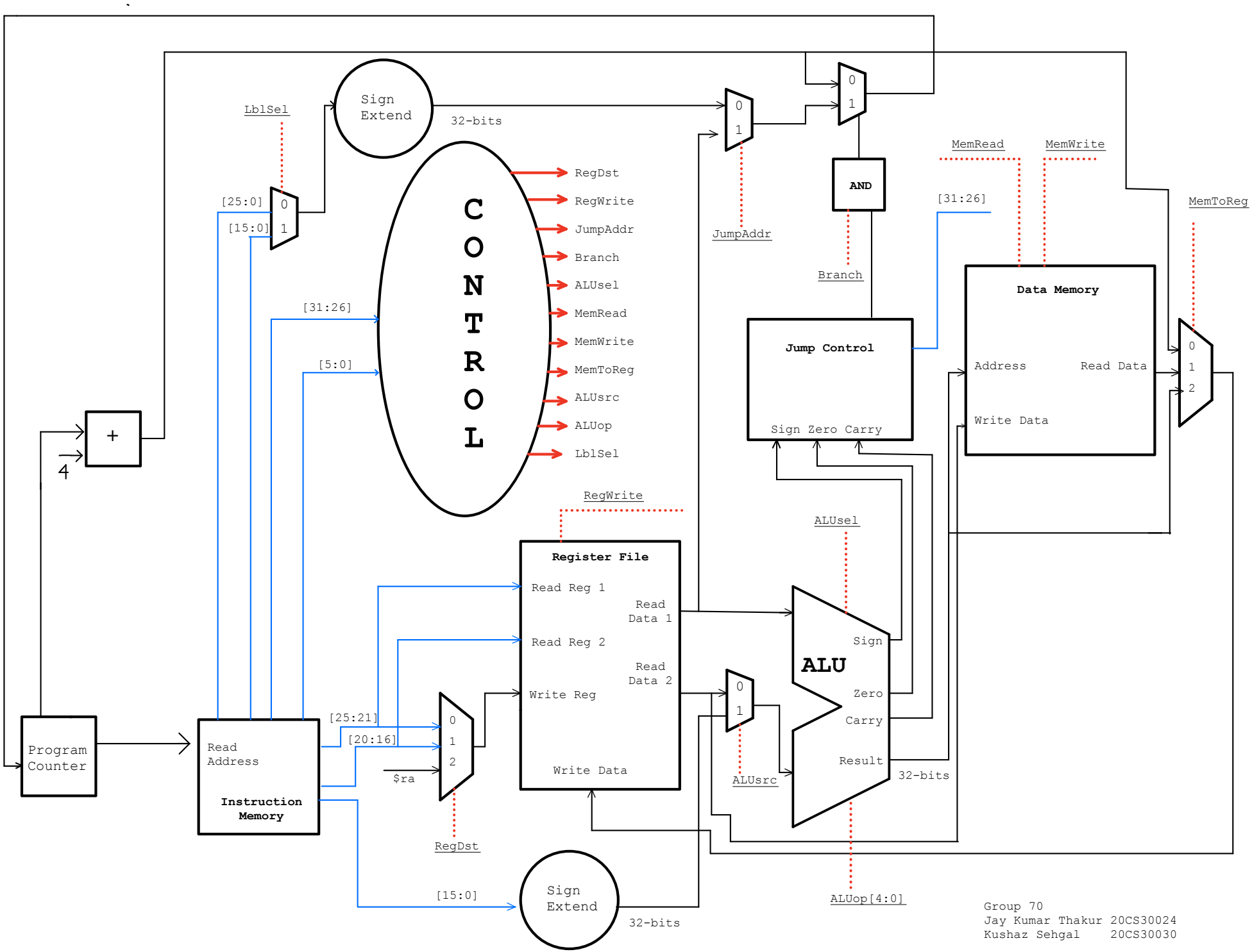

Group 70
Jay Kumar Thakur 20CS30024
Kushaz Sehgal 20CS30030