Bihar Engineering University, Patna

B.Tech 1st Semester Examination, 2025

Course: B.Tech
Code: 100104

Subject: Engineering Graphics and Design

Time: 03 Hours
Full Marks: 70

Instructions:-

(i) The marks are indicated in the right-hand margin.
*(ii) There are **NINE** questions in this paper.*
*(iii) Attempt **FIVE** questions in all.*
*(iv) Question No. **1** is compulsory.*

Q.1 ***Choose the correct answer the following (Any seven questions only):*** **[2 x 7 = 14]**

(a) Which one of the following is not a reducing size scale?
(i) 1:200 (iii) 1:1
(ii) 5/320 (iv) 5:6

(b) The actual length of drawing is 200 m the RF is given as 1:2500. Find the length of drawing.
(i) 20 mm (iii) 0.08 mm
(ii) 80 mm (iv) 160 mm

(c) The projections of a point coincide and both fall above XY. In which quadrant is the point located?
(i) Second quadrant (iii) First quadrant
(ii) Third quadrant (iv) Fourth quadrant

(d) The top view of a rectangular lamina parallel to the VP and perpendicular to the HP will appear as a
(i) square (iii) rectangle
(ii) point (iv) straight line

(e) The axis of a hexagonal prism is parallel to both the HP and the VP. The true shape of the hexagonal will appear in the
(i) top view (iii) front view
(ii) side view (iv) auxiliary view

(f) The section plane is represented in drawing as
(i) a continuous line (iii) a continuous dashed line
(ii) a thick line with dots (iv) a long, dashed, dotted, narrow line, the ends of which is marked thick

(g) For orthographic projections, the BIS recommends the following
(i) First angle projection (iii) Second angle projection
(ii) Third angle projection (iv) Fourth angle projection

(h) The projectors in isometric view are
(i) converging (iii) diverging
(ii) Parallel to plane of projection (iv) perpendicular to plane of projection

(i) Which method of development is employed in case of circle?
(i) Approximation development (iii) Radial line development
(ii) Parallel line development (iv) Triangulation development

(j) Which command is used to extend an object to meet another objects boundary
(i) OFFSET command (iii) EXTEND command
(ii) TRIM command (iv) CHAMFER command

HIGHLY CONFIDENTIAL DOCUMENT - 141 - Government Engineering College, Nawada @ 27/01/2026 01:49 PM

Q.2 (a) Construct a regular pentagon of 25mm side using inscribe circle method. **[7]**

(b) The distance of the focus from the directrix is 50 mm. Trace the path of a point which moves such that its distance from the focus is equal to its distance from the directrix. Also draw a tangent and normal to the curve. **[7]**

Q.3 (a) A point 'P' is 25 mm above H.P. and is in first quadrant. its shortest distance from the XY line is 50 mm. Draw its plan and elevation. **[5]**

(b) A map 160 cm× 100 cm, represents an area of 8000 km^2. Construct a scale to measure kilometres, hectometres and decametres. Find its R.F. and indicate on this scale a distance of 6 kilometres, 5 hectometres and 7decametres. **[9]**

Q.4 The projectors of the ends of a line AB are 50 mm apart. The end A is 20 mm above H.P. and 30 mm in front of the V.P. The end B is 10 mm below H.P. and 40 mm behind V.P. Determine the true length of AB and its inclination with H.P.Also draw traces of line. **[14]**

Q.5 A regular pentagonal plate PQRST of 30 mm sides, has its corner P on the V.P. the plate is inclined at 30^0 to the V.P. such that the side RS is parallel to both the reference planes. Draw the projection of plate. **[14]**

Q.6 Draw the projections of a cube of 40 mm edge resting on the H.P. on one of its corners with solid diagonal vertical. **[14]**

Q.7 A hexagonal pyramid side 30 mm and altitude 60 mm is resting on H.P. on its base with two of the base sides perpendicular to V.P. It is cut by a section plane perpendicular to V.P. and inclined at 45^0 to HP and bisecting the axis. Draw front view and development of lateral surfaces of the pyramid. **[14]**

Q.8 Isometric view an object is given in Fig 1.Draw its orthographic projection by first angle projection method. **[14]**

Q.9 Write a series command steps required to reproduce the geometry in AutoCAD with the help of Line command as shown in Fig 2. Use the absolute coordinate system. **[14]**

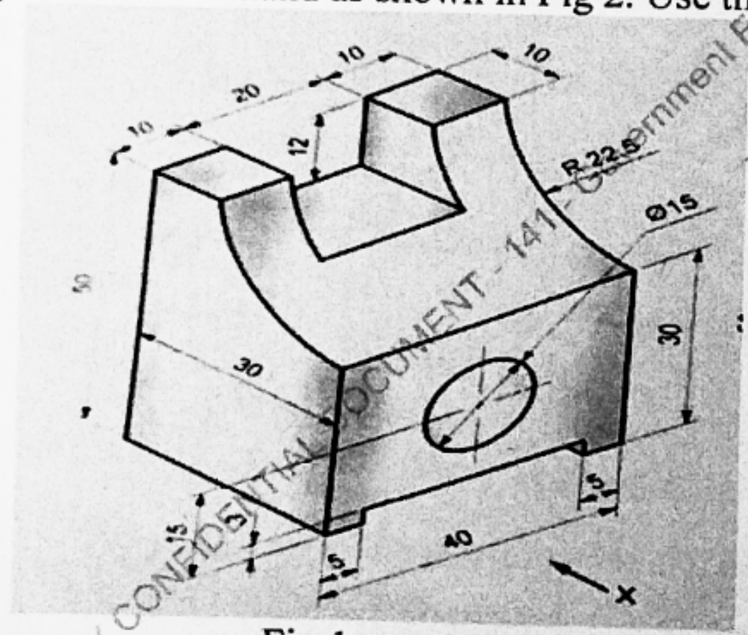

Fig-1

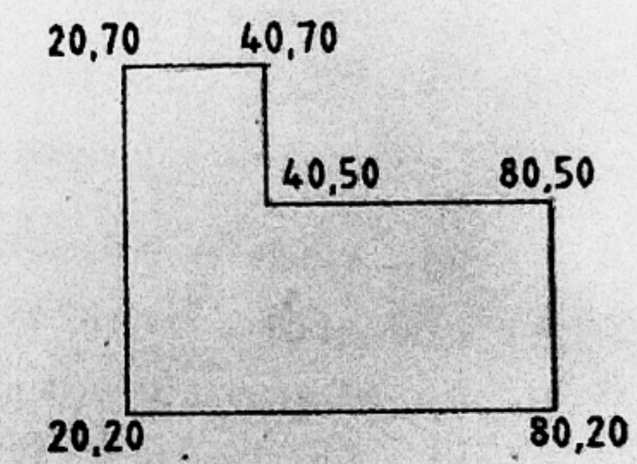

Fig-2

HIGHLY CONFIDENTIAL DOCUMENT - 141 - Government Engineering College, Nawada (2026) 01.43 PM