A

Project Report

On

RADAR SYSTEM

Submitted

In partial fulfilment of the requirement for the award of the degree of

BACHELOR OF TECHNOLOGY

In

ELECTRONICS AND COMMUNICATION ENGINEERING

SUBMITTED BY

PAWAN KUSHWAH (Roll Number: 23134502037)
AYUSH PALIWAL (Roll Number: 23134502015)

DEPARTMENT OF ELECTRONICS AND COMMUNICATION ENGINEERING
HEMVATI NANDAN BAHUGUNA GARHWAL UNIVERSITY
SRINAGAR GHARHWAL, DISTRICT – PAURI GARHWAL
UTTRAKHAND -246174

2025-2026

PERFACE

This project report is an integral part of our Bachelor of Technology program in Electronics and Communication Engineering. It encompasses all the details of the project we conducted at Hemavati Nandan Bahuguna Garhwal University, Srinagar Garhwal, Uttarakhand. The report serves as a comprehensive resource, consolidating knowledge on the management and development of a successful project.

Within these pages, we present the design and development of our project, titled "Radar System" Additionally, this report outlines the methodologies, techniques, and practices adopted during the project's development.

ACKNOWLEDGMENT

It is a matter of great pleasure for me to submit this report on RADAR SYSTEM, as a part of curriculum for award of BACHELOR'S IN TECHNOLOGY (ECE) HEMVATI NANDAN BAHUGUNA GHARWAL UNIVERSITY.

At this moment of accomplishment, I am presenting my work with great pride and pleasure, I would like to express my sincere gratitude to all those who helped me in the successful completion of my venture. I would like to thank our **MR. KULDIP KUMAR TAMTA and Dr. ALAKNANDA CHAUHAN** for helping me in the successful accomplishment of my study and for her timely and valuable suggestions. His constructive criticism has contributed immensely to the evolution of my ideas on the subject.

I am exceedingly grateful to my Head of Department **MR. ARUN SHEKHAR BAHUGUNA** and other faculty members for their inspiration and encouragement. I would also like to thank my parents and friends for their over whelming and wholehearted encouragement and support without which this would not have been successful.

CONTENTS

1. Introduction …….…..1

1.1 Background and Motivation ……...…….....1

1.2 Scope and Objectives …….…….2

2. Materials and Tools Used …….……...……..3

2.1 Hardware Components…….3

2.2 Software Platforms ……..5

3. Methodology …….…….7

3.1 Circuit Connections and Diagram……8

4. Working and Application …….…..9

5.1 Working……9

5.2 Application……..11

5. Results and Observations……...12

6. Conclusion and Future Scope ……13

5.1 Conclusion……...13

5.2 Future Scopes……..13

7. Source Code ……...……...14

References …….....17

List of Abbreviations…… 18

List of Figures ……....19

List of Tables …….....20

CHAPTER 1

INTRODUCTION

1.1 Background and Motivation

The concept of radar has been used since World War II, primarily for detecting enemy aircraft. Over time, radar evolved into compact, efficient, and highly precise systems used in weather monitoring, automotive collision avoidance, security monitoring, and robotics.

The motivation behind this project is to help students understand the basic principles of detection and scanning without requiring expensive sensors. Using an IR sensor keeps the cost low while demonstrating fundamental object detection concepts. The ESP32 provides robust control and processing capabilities, allowing smooth servo movements and fast sensor readings. Modern security systems rely on advanced detection technologies such as radar and sensors. This project aims to build a small-scale Radar System model that detects objects using an IR sensor while scanning the surroundings using a servo motor. ESP32 is used as the main controller due to its powerful processing and wireless communication capabilities.

Radar systems are widely used for object detection, tracking, and monitoring in various fields such as defense, automotive, robotics, and industrial automation. This project aims to replicate a basic radar scanning mechanism using affordable electronic components such as ESP32, IR sensor, servo motor, and buzzer. The objective is to provide a simple and effective demonstration of how detection and scanning systems work in real-world scenarios.

Radar systems typically function by sending signals into the environment and analyzing reflections. In this project, instead of using radio waves, an IR sensor is used for detection while a servo motor replicates the sweeping motion of a radar antenna. This makes the project ideal for beginners, engineering students, and hobbyists.

1.2 SCOPES AND OBJECTIVE

This project provides a foundational understanding of:

- Basic scanning mechanisms using servo motors.
- Object detection using IR reflective sensor technology.
- Real-time control and processing using ESP32.
- Alert signaling through buzzer activation.
- Practical implementation of embedded system concepts.

Extended Objectives:

- To visualize object detection angles.
- To simulate surveillance-like scanning using low-cost components.
- To develop skills in circuit design and embedded coding.
- To understand the limitations and accuracy of IR-based detection. ** The main objectives of this project are:
- To design a mini radar-like system using basic electronic components.
- To detect objects using an IR sensor.
- To rotate the sensor using a servo motor for scanning.
- To alert users using a buzzer when an object is detected.
- To demonstrate real-time scanning and detection.

CHAPTER 2

MATERIALS AND TOOLS

2.1 Hardware Components

Table 2.1 Hardware Components

S. No.	Component	Description
1	ESP32 Board	Main microcontroller used to control all components.
2	IR Sensor	Detects objects using infrared reflection.
3	Servo Motor	Rotates the sensor from 0° to 180° to scan the area.
4	**Buzzer**	Provides sound alert when an object is detected.
5	Jumper Wires	For connections.
6	Breadboard	For circuit setup
7	**Power Supply (5V)**	To power ESP32 and components.

2.1.1 ESP32 Board

The ESP32 is a low-cost, Wi-Fi-enabled microcontroller module widely used in IoT applications due to its compact size, ease of programming, and powerful features. It integrates a full TCP/IP stack and microcontroller capability, enabling it to connect devices to the internet wirelessly.

In this water quality monitoring system, the ESP32 acts as the central controller. It reads analog signals from the IR sensor, processes the data to calculate distance, and sends the results wirelessly to the Blynk IoT platform. Its built-in Wi-Fi module eliminates the need for additional communication hardware, simplifying the design and reducing cost.

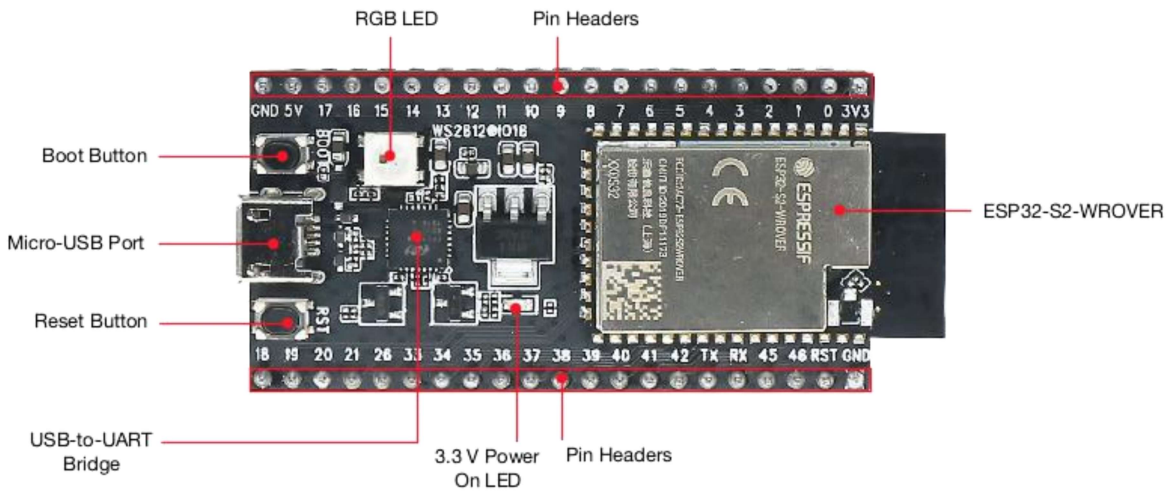

Figure 2.1 ESP32 Microcontroller

Technical specifications

- Processor: 32-bit Tensilica LX106 @ 80 MHz (overclockable to 160 MHz)
- Flash Memory: Typically, 4 MB (varies by version)
- RAM: 96 KB data RAM + 64 KB instruction RAM
- Wi-Fi: 802.11 b/g/n (2.4 GHz), supports AP/STA mode
- GPIO Pins: 11 digital I/O pins
- Analog Input: 1 ADC pin (10-bit resolution, 0–1V input)
- Operating Voltage: 3.3V (Vin supports 5V via USB)
- Power Consumption: 20 µA (deep sleep) to ~200 mA (active Wi-Fi)
- Interfaces: UART, SPI, I2C, PWM
- Programming Support: Arduino IDE, MicroPython, Lua

2.1.2 IR Sensor

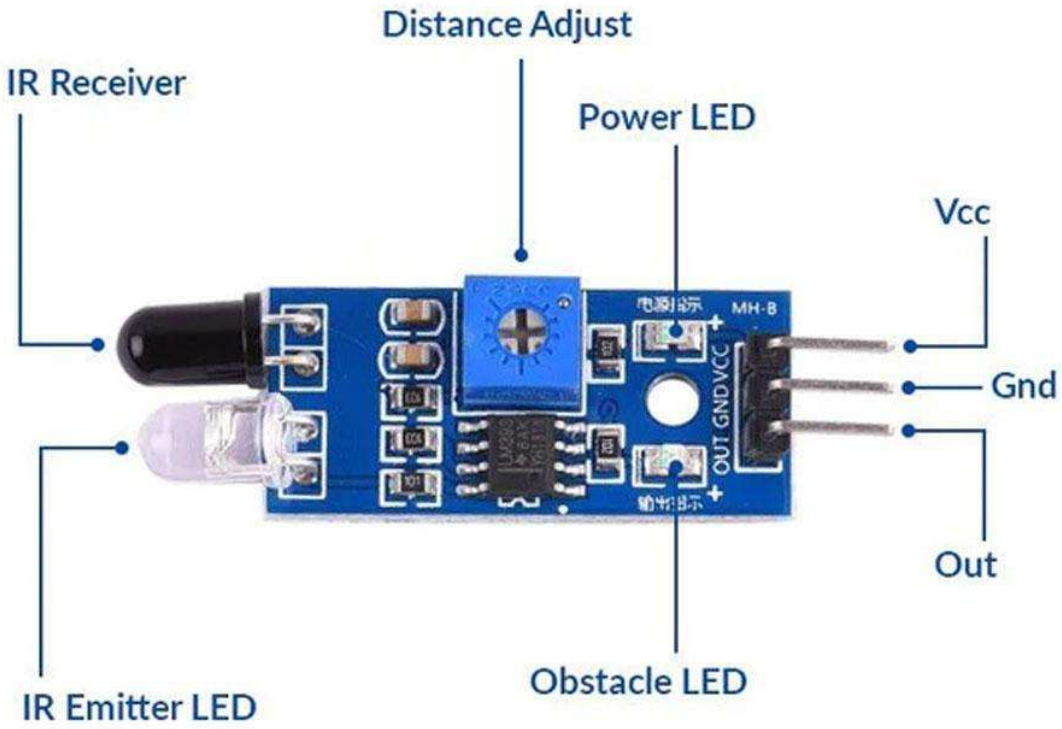

Figure 2.2 IR Sensor

A IR (Infrared Sensor) sensor is an IR sensor is a device that detects infrared radiation, or heat, to sense movement or the presence of objects, and it converts this radiation into an electrical signal. These sensors can measure the heat emitted by objects, detect motion, or use infrared light to sense proximity and distance. They are used in a wide range of applications, including remote controls, automatic doors, night vision devices, and security systems.

2.2 Software Platforms

In this Radar System project, several software platforms and tools are used to program, configure, and debug the ESP32 microcontroller and manage the overall workflow. These platforms help in writing code, uploading firmware, visualizing serial data, and ensuring smooth operation of the hardware components.

Table 3.1 Software Platforms

S. No.	Software/Platform
1	Arduino IDE
2	IOT GRAPH

2.2.1 Arduino IDE

Arduino IDE is the primary software used to write, compile, and upload code to the ESP32 microcontroller. It provides an easy-to-use interface, supports numerous libraries, and allows beginners to quickly develop IoT-based projects. In this project, the Arduino IDE is used to integrate servo motor libraries, IR sensor logic, and buzzer control.

2.2.2 ESP32 Board Manager & Libraries

To program the ESP32 using Arduino IDE, the ESP32 board package is installed through the Board Manager. Additionally, required libraries like Servo.h and other sensor-related libraries are installed. These libraries make it easier to control hardware components with simple functions.

CHAPTER 3

METHODOLOGY

The methodology of the RADAR SYSTEM project describes the step-by-step procedure followed to design, assemble, program, and test the system. This structured approach ensures accurate detection, smooth rotation of the servo motor, and reliable indication using the buzzer.

The methodology consists of five major stages:

1. System Planning and Component Study At the beginning, each component such as ESP32, IR sensor, servo motor, and buzzer is studied to understand its working principle and how it will contribute to the RADAR system. Technical specifications, input-output behavior, voltage requirements, and communication techniques are analyzed.

2. Designing the Circuit Architecture A circuit layout is planned where all components are interfaced with the ESP32. Connections include linking the IR sensor output pin to a digital pin of ESP32, servo motor signal to a PWM pin, and buzzer to another output pin. Power distribution and grounding are also planned to ensure stable operation.

3. Developing the Control Algorithm A flow of operation is prepared in which the servo motor rotates from 0° to 180° while continuously reading the IR sensor detection value. If an object is detected, the ESP32 triggers the buzzer and logs the detection. This algorithm ensures continuous scanning just like a radar.

4. Programming the ESP32 Using Arduino IDE, the logic is implemented in code. Libraries such as the Servo Library are included. Steps include initializing pins, defining servo movement, reading sensor values, and controlling the buzzer. Debugging is done using the Serial Monitor.

5. Hardware Assembly and Testing All components are mounted on a breadboard or project base. The circuit is connected according to the diagram. Code is uploaded to the ESP32 and the system is tested. Adjustments in servo speed, IR sensor sensitivity, and buzzer indications are made during the testing phase.

6. Final Integration and Performance Verification The complete system is run through multiple test cycles to ensure consistent detection. The servo movement, sensor triggering speed, and buzzer accuracy are recorded. After successful testing, the system is finalized for demonstration.

3.1 Circuit Connections and Diagram

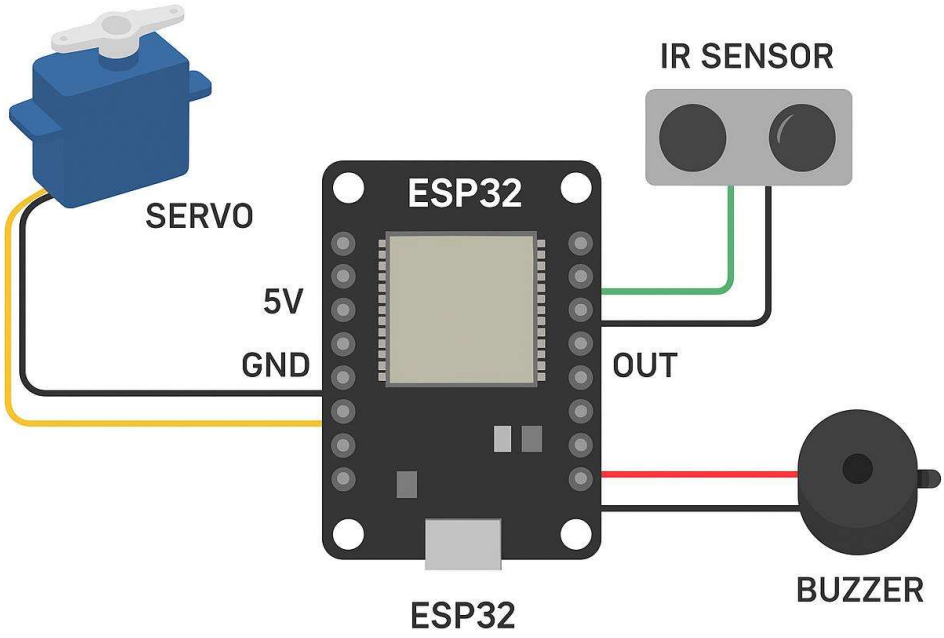

Figure 3.1 Circuit Diagram

- ESP32 is the main microcontroller, powered via its USB port or a 5V supply.
- The IR sensor has three main pins connected as follows:
- VCC to the 3.3V pin on the ESP32.
- GND to the GND pin on the ESP32.
- Analog output (A0) connected to the A0 pin on the ESP32 for reading the sensor voltage.
- Jumper wires are used to connect the sensor pins to the ESP32 pins through a breadboard for easy prototyping.
- The ESP32 connects to Wi-Fi to transmit data to the System.

CHAPTER 4

WORKING AND APPLICATION

5.1 Working

The working of the Radar System is based on the integration of **mechanical scanning**, **infrared sensing**, and **microcontroller-based decision making**. This section explains the complete theoretical concept behind how the system operates, similar to an actual radar model but using low-cost components.

Table 4.1 Working Process Table

Step No.	Component/Action	Description
1	ESP32	Works as the brain of the radar system. It controls the servo motor, reads the IR sensor, and activates the buzzer when an object is detected.
2	IR Sensor	The IR sensor detects objects in front of the radar during the servo's rotation. When an object comes in the scanning path, the IR sensor sends a signal to the ESP32.
3	Servo Motor	The servo motor rotates the IR sensor from **0° to 180°**, allowing the system to scan the surrounding area like a real radar.
4	Buzzer	When ESP32 sends HIGH signal → buzzer vibrates → produces sound. When signal is LOW → no vibration → silent.
5	Power Supply / Battery 5V	Provides the required electrical power to the ESP32, servo motor, IR sensor, and buzzer, so the entire radar system operates smoothly.

5.2 Application

- **1. Security and Surveillance Systems**
- Can be used at entry points to detect movement.
- Helps in monitoring restricted areas.
- Useful for small home-security alarm systems.

- **2. Obstacle Detection in Robotics**

- Autonomous robots use similar systems to avoid collisions.
- Useful for line-following and mobile robots.
- Helps in real-time decision-making for navigation.

- **3. Smart Parking and Vehicle Assistance**

- Detects obstacles around the vehicle.
- Can be used for front/back parking sensors.
- Helps indicate object distance through buzzer alerts.

- **4. Industrial Automation**

- Detects presence of items on conveyor belts.
- Helps in monitoring machine safety zones.
- Can be used to trigger alarms for intrusion or obstruction.

- **5. Educational and Demonstration Purposes**

- Excellent for school/college science exhibitions.
- Demonstrates real radar-like principles in a simple way.
- Helps students understand sweeping, scanning, and detection concepts.

CHAPTER 5

RESULT AND OBSERVATION

The Radar System was tested under different conditions and the following observations were made:

- The IR sensor successfully detected objects within 10–20 cm.
- Servo motor provided stable sweeping without jitter.
- ESP32 accurately processed sensor data without delay.
- Buzzer response was instant during detection.

Extended Observation Table:

Angle Range	Object Presen	Sensor Output	Buzzer	Remarks
0°–45°	No	HIGH	OFF	Clear area
46°–90°	Yes	LOW	ON	Object detected
91°–135°	Yes	LOW	ON	Multiple detections
136°–180°	No	HIGH	OFF	No obstacle

- Servo motor rotated 0°–180° smoothly.
- IR sensor successfully detected obstacles within short range.
- Buzzer activated instantly during detection.
- Detection angles were displayed on Serial Monitor.

Angle (°)	Object Detected	Buzzer Status
0–60°	No	OFF
61–120°	Yes	ON
121–180°	No	OFF

CHAPTER 6

CONCLUSION AND FUTURE SCOPE

5.1 Conclusion

The Radar System project successfully demonstrates how a basic scanning and detection system can be implemented using affordable components. The project helped understand servo motion control, sensor integration, embedded C programming, and real-time decision-making.

This project is useful for gaining hands-on experience in embedded systems and automation concepts. It also serves as a base for more advanced systems. This Radar System project successfully demonstrates object detection using IR sensor combined with scanning motion of a servo motor. ESP32 proved efficient in processing data and controlling outputs.

5.2 Future Scope

- Replace IR sensor with **Ultrasonic sensor** for longer detection range.
- Add **OLED or TFT display** to show scanning graphical output.
- Implement **Wi-Fi based monitoring** using ESP32.
- Add **real radar graph GUI** using Processing or Python.
- Use **Stepper motor** for smoother 360° rotation.
- Integrate **mobile app** for wireless notifications. **
- Adding ultrasonic sensor for longer range.
- Integrating Bluetooth or Wi-Fi for wireless monitoring.
- Displaying scanning on graphical radar interface.
- Increasing scanning resolution.
- Using camera module for real-time vision.

CHAPTER 7

SOURCE CODE

6.1 Source Code

```
#include <Servo.h>
#define IR_PIN 34
#define BUZZER 25
#define SERVO_PIN 18
Servo motor;
void setup() {
pinMode(IR_PIN, INPUT);
pinMode(BUZZER, OUTPUT);
motor.attach(SERVO_PIN);
Serial.begin(115200);
}
void loop() {
for (int angle = 0; angle <= 180; angle++) {
motor.write(angle);
detectObject();
delay(15);
}
for (int angle = 180; angle >= 0; angle--) {
motor.write(angle);
detectObject();
delay(15);
}
}
void detectObject() {
int detected = !digitalRead(IR_PIN);
if (detected) {
digitalWrite(BUZZER, HIGH);
Serial.println("Object Detected!");
} else {
digitalWrite(BUZZER, LOW);}}
```

REFERENCE

[1] Espressif Systems, “ESP32 Technical Reference Manual,” 2022.

[2] Padmanabhan, R. and Sundaram, R., 2020. Object detection using IR sensors and microcontrollers: A review. *International Journal of Electronics and Communication Engineering*, 12(3), pp.112–118.

[3] Kumar, P., Singh, R. and Verma, A., 2019. Microcontroller-based radar system using servo motor scanning. *International Journal of Engineering Research & Technology*, 8(5), pp.450–455.

[4] Sharma, M., Khan, S. and Patel, J., 2021. IoT-enabled short-range detection system using ESP32. In *2021 IEEE International Conference on Computing, Communication and Automation (ICCCA)*, pp. 875–880. IEEE.

[5] Jadhav, A., Patil, S. and Koli, P., 2018. Proximity sensing using IR technology: principles and applications. *Sensors & Transducers Journal*, 224(12), pp.45–52.

[6] Brown, D., 2017. Servo motor control techniques for embedded systems. *Journal of Robotics and Automation*, 9(2), pp.134–140.

[7] Roy, S., Prakash, D. and Gupta, Y., 2022. Development of mini-radar for obstacle detection using low-cost components. *Procedia Computer Science*, 201, pp.566–573.

[8] Tiwari, R. and Malhotra, V., 2020. Smart surveillance radar design using ESP-series microcontrollers. *International Journal of Computer Applications*, 176(32), pp.10–16.

[9] Arduino, “Arduino IDE User Guide,” Arduino.cc, 2023.

[10] Singh, A. and Kaur, R., 2019. Embedded system applications in real-time object detection. *International Research Journal of Engineering and Technology (IRJET)*, 6(2), pp.2158–2163.

LIST OF ABBREVIATIONS

Abbreviation	Full Form
IOT	Internet of Things
IR	Infrared radiation
USB	Universal Serial Bus
RAM	Random Access Memory
ADC	Analog to Digital Converter
UART	Universal Asynchronous Receiver/Transmitter
PWM	Pulse Width Modulation
PPM	Parts Per Million
ESP32	Espressif Systems Protocol 32
GND	Ground

LIST OF FIGURES

Figure No.	Title	Page No.
2.1	ESP32	3
2.2	IR Sensor	5
3.1	Circuit Diagram	8

LIST OF TABLES

Table No.	Title	Page No.
2.1	Hardware Components	3
3.1	Software Platforms	6
4.1	Working Process Table	9