Recap:

① Text classification $\begin{cases} NB \\ LR \end{cases}$

NB: $C_{MAP} := \arg\max_{c \in C} P(d|c) \cdot P(c)$

$$\approx \arg\max_{c \in C} \sum_{v_i \in V} \log \hat{P}(v_i|c) + \log \hat{P}(c)$$

LR: Max: $P_\theta(y|x) = \hat{y}^y (1-\hat{y})^{1-y}$ $\quad \hat{y} = \sigma(w^T x + b)$

$$\Rightarrow \min_\theta -[y \log \hat{y} + (1-y) \log(1-\hat{y})]$$

$$\Rightarrow \min_\theta \ell(\theta) := \frac{1}{N} \sum_{i=1}^{N} f_i(\theta; x^{(i)}, y^{(i)})$$

② TF-IDF, PPMI

$$W_{t,d} = TF_{t,d} \cdot IDF_t$$

$$PPMI(w_1, w_2) = \max\left(\log_2 \frac{P_{ij}}{P_{i*} P_{j*}}, 0\right)$$

③. Static embedding (word2vec)

$$\max \prod_{w \in Text} \left[\prod_{c \in C(w)} P(c|w; \theta) \right].$$

$$\Rightarrow \min \sum_i L_i = -[\log \sigma(w^T \cdot c_{pos}) + \sum_{i=1}^{k} \log \sigma(-w^T \cdot c_{neg_i})]$$

NPLM:

$$\hat{p}(w_t \mid w_{t-1} \cdots w_{t-N+1}) = \frac{e^{y_{w_t}}}{\sum_i e^{y_i}}$$

$$y = b + Wx + U \cdot \tanh(d + Hx)$$

$$\theta = (b, d, W, U, H, C)$$

$$x = (C(w_{t-1}), C(w_{t-2}), \cdots C(w_{t-N+1})) \in \mathbb{R}^{(n-1)\times m}$$

$b \in \mathbb{R}^{|V|}$

$d \in \mathbb{R}^{h}$: hidden units bias (h)

$U \in \mathbb{R}^{|V|\times h}$

$C \in \mathbb{R}^{|V|\times m}$

$W \in \mathbb{R}^{|V|\times(n-1)\times m}$

$H \in \mathbb{R}^{h\times(n-1)\times m}$

$y \in$

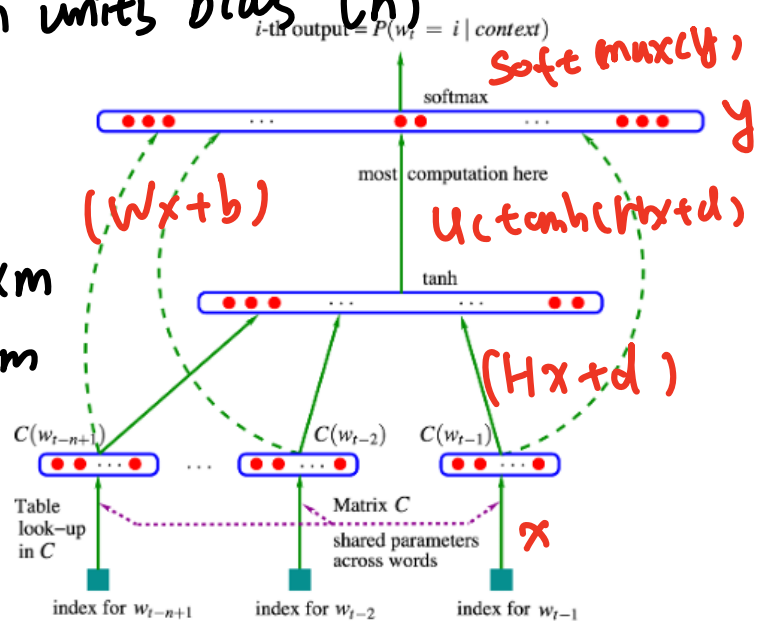

Figure 1: Neural architecture: $f(i, w_{t-1}, \cdots, w_{t-n+1}) = g(i, C(w_{t-1}), \cdots, C(w_{t-n+1}))$ where g is the neural network and $C(i)$ is the i-th word feature vector.

parameters:

$$|V| + h + |V| \times h + |V| \times m$$

$$+ |V| \times (n-1) \times m + h \times (n-1) \times m$$

$$= |V|(1 + h + n \cdot m) + h + h \cdot (n-1) \cdot m$$

#: $O(|V| \cdot n \cdot m)$

N-gram: $O(|V|^n)$.

Vanilla RNN:

$\Rightarrow$

$$\begin{cases} h_t \triangleq \phi_h(W_{xh}^T \cdot X_t + W_{hh}^T \cdot h_{t-1} + b_h) \\ \quad \phi_h: \tanh,\ \text{ReLU} \\ O_t \triangleq h_t \cdot W_{yh} + b_y \\ \hat{y}_t \triangleq \text{softmax}(O_t) = \phi_o(O_t) \\ \quad \phi_o: \text{softmax} \end{cases}$$

(LM).

$$\begin{cases} W_{xh}: \text{input weights} \\ W_{hh}: \text{recurrent weights (memory unit)} \\ W_{yh}: \text{output weights.} \end{cases}$$

$$L(\hat{y}, y) = -\sum_{t=1}^{T} y_t \log[\phi_o(O_t)] = -\sum_{t=1}^{T} L_t(\hat{y}_t, y_t)$$

Unrolling: $t = 1, 2, \cdots, T$

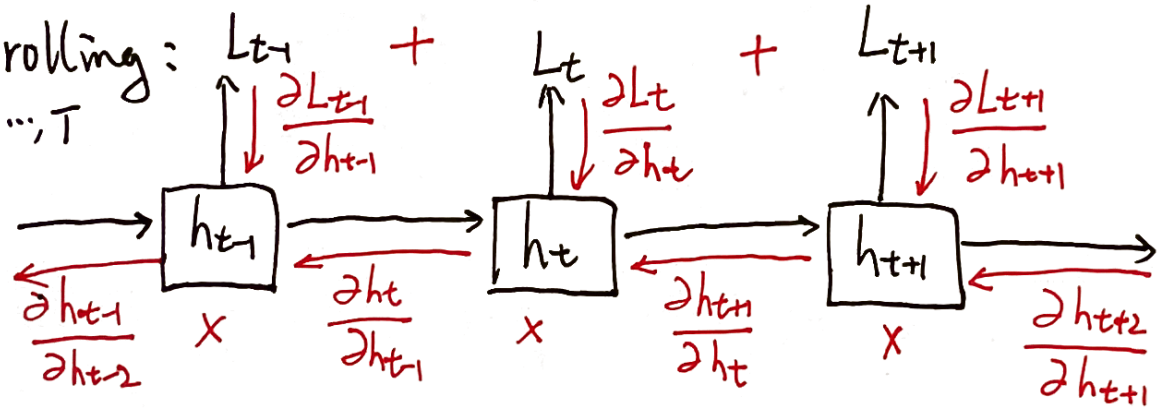

Training: BPTT. We aim at updating W_{xh}, W_{hh}, W_{yh}

Let us draw computational graph:

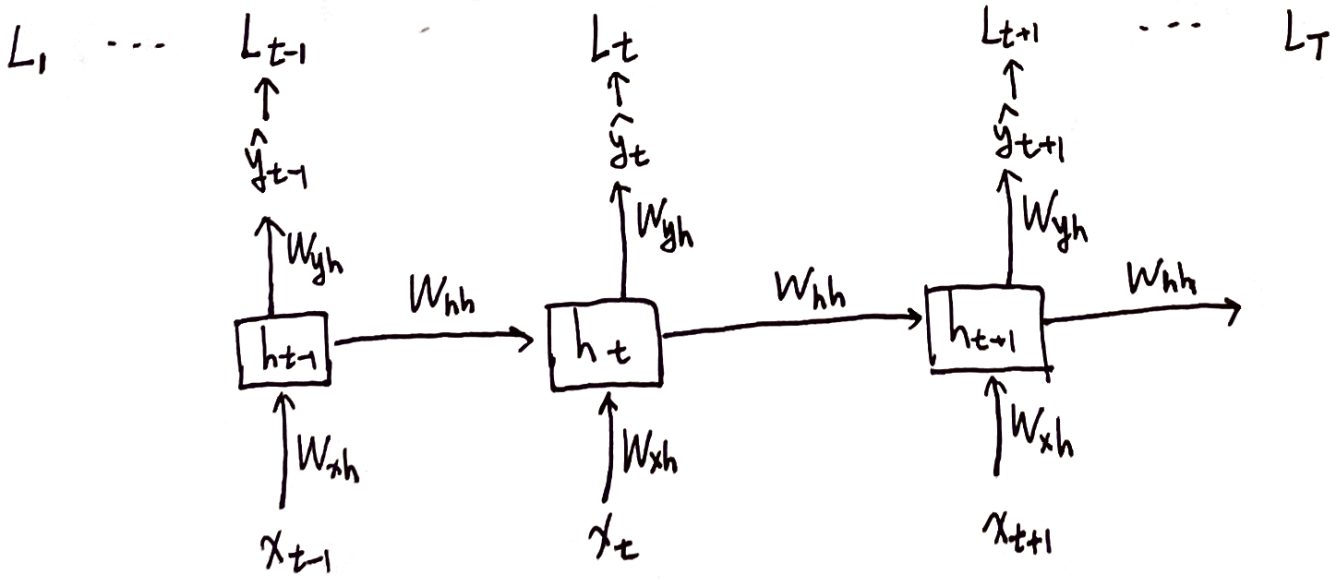

For $\frac{\partial L}{\partial W_{yh}}$, just summing over all possible data streaming:

All data path: $\xrightarrow{W_{yh}} \cdots \to L_1$, $\xrightarrow{W_{yh}} \cdots \to L_2$, $\cdots$, $\xrightarrow{W_{yh}} \cdots \to L_T$

Each of them is like: $W_{yh} \to O_t \to \hat{y}_t \to L_t$

$$\frac{\partial L}{\partial W_{yh}} = \sum_{t=1}^{T} \frac{\partial L_t}{\partial \hat{y}_t} \cdot \frac{\partial \hat{y}_t}{\partial O_t} \cdot \frac{\partial O_t}{\partial W_{yh}}.$$

For $\frac{\partial L}{\partial W_{hh}}$, Similarity counting all streaming path $W_{hh} \to L_t$.

$t=1$: $h_0 \xrightarrow{W_{hh}} h_1 \to O_1 \to \hat{y}_1 \to L_1$

$t=2$: $h_0 \xrightarrow{W_{hh}} h_1 \xrightarrow{W_{hh}} h_2 \to O_2 \to \hat{y}_2 \to L_2$

$t=3$: $h_0 \xrightarrow{W_{hh}} h_1 \xrightarrow{W_{hh}} h_2 \xrightarrow{W_{hh}} h_3 \to O_3 \to \hat{y}_3 \to L_3$

$\vdots$

$t=T$: $h_0 \xrightarrow{W_{hh}} h_1 \xrightarrow{W_{hh}} h_2 \xrightarrow{\cdots} h_{T-1} \xrightarrow{W_{hh}} h_T \to O_T \to \hat{y}_T \to L_T$

When $t=1$, $\frac{\partial L_1}{\partial W_{hh}} = \frac{\partial L_1}{\partial \hat{y}_1} \cdot \frac{\partial \hat{y}_1}{\partial h_1} \cdot \left[\frac{\partial h_1}{\partial W_{hh}}\right]$ ← directly get from formula

When $t=2$, $\frac{\partial L_2}{\partial W_{hh}} = \frac{\partial L_2}{\partial \hat{y}_2} \cdot \frac{\partial \hat{y}_2}{\partial h_2} \cdot \left[\frac{\partial^{+} h_2}{\partial W_{hh}}\right]$: ordered derivative

$h_2 := \phi_h(W_{hh}, h_1(W_{hh}))$

Recall $f(x(\tau), y(\tau))$, $\frac{\partial f}{\partial \tau} = \frac{\partial f}{\partial x} \cdot \frac{\partial x}{\partial \tau} + \frac{\partial f}{\partial y} \cdot \frac{\partial y}{\partial \tau}$.

Let $\tau = W_{hh}$, $x(\tau) = W_{hh}$, $y(\tau) = h_1(W_{hh})$. $f(x,y) = h_2$.

$$\Rightarrow \frac{\partial^{+} h_2}{\partial W_{hh}} = \frac{\partial h_2}{\partial W_{hh}} \cdot 1 + \frac{\partial h_2}{\partial h_1} \cdot \frac{\partial h_1}{\partial W_{hh}}$$

For any t, we have

$t=3.$ $\frac{\partial h_3}{\partial W_{hh}} = \frac{\partial h_3}{\partial W_{hh}} + \frac{\partial h_3}{\partial h_2} \cdot \frac{\partial h_2}{\partial W_{hh}}$

$$\frac{\partial h_t}{\partial W_{hh}} = \sum_{k=1}^{t} \frac{\partial L_t}{\partial \hat{y}_t} \cdot \frac{\partial \hat{y}_t}{\partial h_t} \cdot \frac{\partial h_t}{\partial h_k} \cdot \frac{\partial h_k}{\partial W_{hh}}$$

Summing over all T paths, we get:

$$\frac{\partial L}{\partial W_{hh}} = \sum_{t=1}^{T} \frac{\partial L_t}{\partial W_{hh}} = \sum_{t=1}^{T} \sum_{k=1}^{t} \frac{\partial L_t}{\partial \hat{y}_t} \cdot \frac{\partial \hat{y}_t}{\partial h_t} \cdot \left[\frac{\partial h_t}{\partial h_k}\right] \cdot \frac{\partial h_k}{\partial W_{hh}}.$$

$$\frac{\partial h_t}{\partial h_k} = \prod_{j=k}^{t-1} \frac{\partial h_{j+1}}{\partial h_j}.$$

For $\frac{\partial L}{\partial W_{xh}}$, we also have T data paths. $\xrightarrow{W_{xh}} h_t \xrightarrow{W_{xh}} h_{t+1} \to \cdots \to L_{t+k}$

$$\frac{\partial L}{\partial W_{xh}} = \sum_{t=1}^{T} \sum_{k=1}^{t} \frac{\partial L_t}{\partial \hat{y}_t} \cdot \frac{\partial \hat{y}_t}{\partial h_t} \cdot \frac{\partial h_t}{\partial h_k} \cdot \frac{\partial h_k}{\partial W_{xh}}.$$

Remark: ①. BPTT is foundamental sequential style!

②. We cannot parallel comp. $\prod_{j=k}^{t} \frac{\partial h_{j+1}}{\partial h_j}$.

③. "Memory info" are in $\frac{\partial h_t}{\partial h_k}$.

Some facts from matrix calculus:

$$\frac{\partial \vec{y}}{\partial \vec{x}} = \begin{bmatrix} \frac{\partial y_1}{\partial x_1} & \frac{\partial y_2}{\partial x_1} & \cdots & \frac{\partial y_m}{\partial x_1} \\ \frac{\partial y_1}{\partial x_2} & \frac{\partial y_2}{\partial x_2} & \cdots & \frac{\partial y_m}{\partial x_2} \\ \vdots & \vdots & & \vdots \\ \frac{\partial y_1}{\partial x_n} & \frac{\partial y_2}{\partial x_n} & \cdots & \frac{\partial y_m}{\partial x_n} \end{bmatrix}, \quad \frac{\partial y}{\partial X} = \begin{bmatrix} \frac{\partial y}{\partial x_{11}} & \frac{\partial y}{\partial x_{12}} & \cdots & \frac{\partial y}{\partial x_{1q}} \\ \frac{\partial y}{\partial x_{21}} & \frac{\partial y}{\partial x_{22}} & \cdots & \frac{\partial y}{\partial x_{2q}} \\ \vdots & \vdots & & \vdots \\ \frac{\partial y}{\partial x_{p1}} & \frac{\partial y}{\partial x_{p2}} & \cdots & \frac{\partial y}{\partial x_{pq}} \end{bmatrix},$$

where $\vec{y} \in \mathbb{R}^m$, $\vec{x} \in \mathbb{R}^n$.

where $y \in \mathbb{R}$, $X \in \mathbb{R}^{p \times q}$

Partial derivative of $\frac{\partial h_t}{\partial h_{t-1}}$. Recall $h_t = \phi_h(W_{hh}^T h_{t-1} + W_{xh}^T x_t + b_h)$

$$\frac{\partial h_t}{\partial h_{t-1}} = \begin{bmatrix} \frac{\partial h_t(1)}{\partial h_{t-1}(1)} & \frac{\partial h_t(2)}{\partial h_{t-1}(1)} & \cdots & \frac{\partial h_t(d)}{\partial h_{t-1}(1)} \\ \frac{\partial h_t(1)}{\partial h_{t-1}(2)} & \frac{\partial h_t(2)}{\partial h_{t-1}(2)} & \cdots & \frac{\partial h_t(d)}{\partial h_{t-1}(2)} \\ \vdots & \vdots & & \vdots \\ \frac{\partial h_t(1)}{\partial h_{t-1}(d)} & \frac{\partial h_t(2)}{\partial h_{t-1}(d)} & \cdots & \frac{\partial h_t(d)}{\partial h_{t-1}(d)} \end{bmatrix}, \quad h_t = \begin{bmatrix} \phi_h(W_{hh}^T(1)\, h_{t-1} \cdots) \\ \phi_h(W_{hh}^T(2)\, h_{t-1} \cdots) \\ \vdots \\ \phi_h(W_{hh}^T(d)\, h_{t-1} \cdots) \end{bmatrix}$$

$$h_t(i) = \phi_h(W_{hh}^T(i) \cdot h_{t-1} + W_{xh}^T(i) \cdot x_t + b_h(i))$$

$$\frac{\partial h_t(i)}{\partial h_{t-1}(j)} = \phi_h'(W_{hh}^T(i) \cdot h_{t-1} + W_{xh}^T(i) \cdot x_t + b_h(i)) \cdot W_{hh}(i,j)$$

Let $\mathrm{Diag}(\phi_h'(W \cdots)) = [\cdots, \quad]$.

then, $\frac{\partial h_t}{\partial h_{t-1}} = \mathrm{Diag}(\phi_h') \cdot W_{hh}$.

Vanishing Gradient and Exploding Gradients.

Consider magnitudes $\frac{\partial h_t}{\partial h_{t-1}}$

$$\left\| \frac{\partial h_t}{\partial h_{t-1}} \right\| \le \|W_{hh}\| \cdot \|\mathrm{Diag}(\phi_h')\|. \qquad (|a \cdot b| \le |a| \cdot |b|).$$

$\phi_h = \mathrm{Tanh}$:

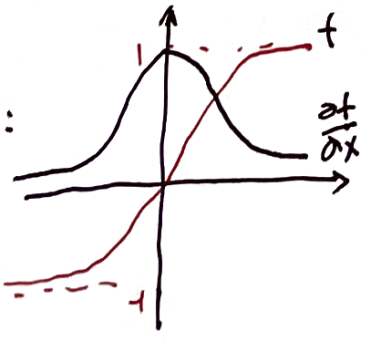

$\phi_h'(x) \le 1$.

$\phi_h = \mathrm{Sigmoid}$:

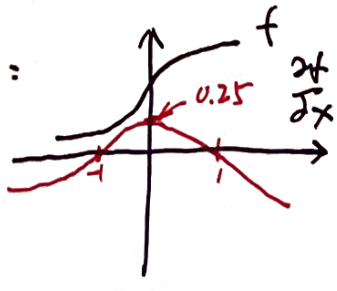

$\| \mathrm{Diag}(\phi'_h) \| \le \gamma_h, \quad \gamma_h < 1.$

$\| W_{hh} \| \le \gamma_w. \qquad \gamma_w$

$$\left\| \frac{\partial h_t}{\partial h_k} \right\| = \left\| \frac{\partial h_t}{\partial h_{t-1}} \cdots \frac{\partial h_{k+1}}{\partial h_k} \right\| \le \prod_{i=k}^{t-1} \left\| \frac{\partial h_{i+1}}{\partial h_i} \right\|$$

$$\le \left(\| \mathrm{Diag}(\phi'_h) \| \cdot \| W_{hh} \| \right)^{t-k}$$

$$\le (\gamma_h \cdot \gamma_w)^{t-k}.$$

① When $\gamma_h \cdot \gamma_w < 1$, $\rightarrow (\gamma_h \cdot \gamma_w)^{t-k} \rightarrow 0$. vanishing gradients!

② $\gamma_h \le 1$, $\gamma_w > 1$. $\rightarrow (\gamma_h \cdot \gamma_w)^{t-k} \rightarrow 0$, Exploding gradients!

How to fix it?

①. If $\|\vec{g}\| \ge$ threshold, $\vec{g} \leftarrow \frac{\text{threshold}}{\|\vec{g}\|} \cdot \vec{g}$.

②. Leaky Integration Units:

$$h_{t,i} = \alpha_i \cdot h_{t-1,i} + (1-\alpha_i) f_w(h_{t-1}, x_t) \qquad i \in S.$$

sub set of states change slowly. $\alpha_i \sim (0.02, 0.2)$

③. Vanishing Gradient Regularization.

LSTM:

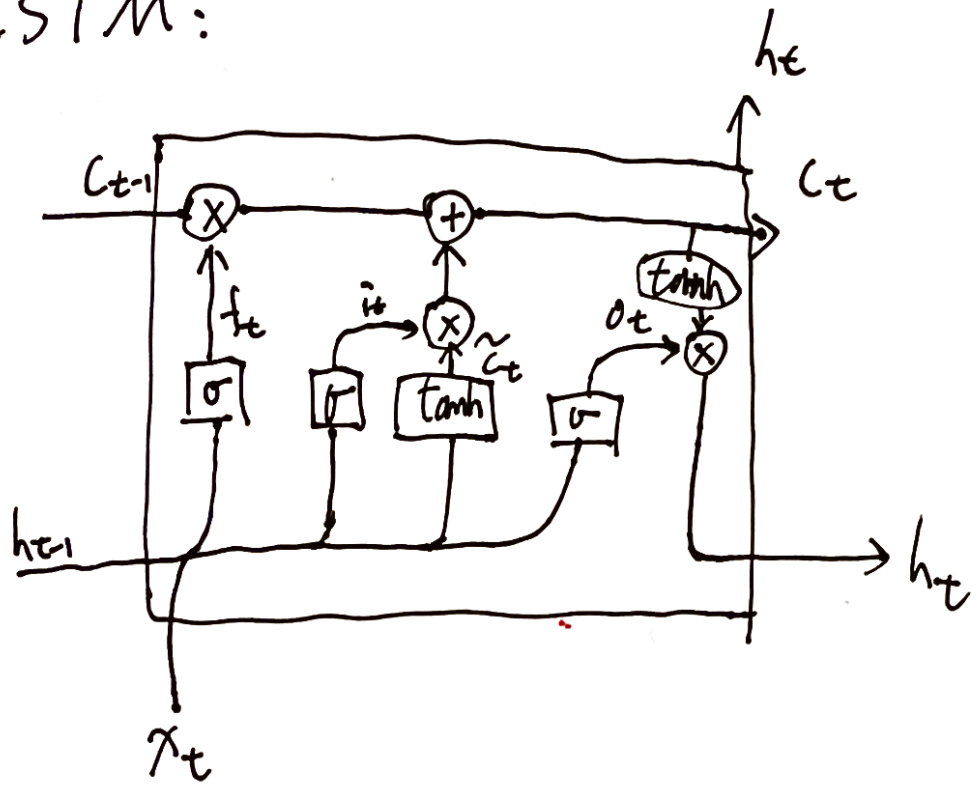

① Cell state $C_t = f_t \cdot C_{t-1} + i_t \cdot \tilde{C}_t$

② forget some info: $f_t = \sigma(W_f \cdot [h_{t-1}, x_t] + b_f)$.

↓

③ store new info: $\begin{cases} \text{input gate layer: which values will be updated.} \\ \text{tanh layer: } \tilde{C}_t \text{ could be added into } C_t \end{cases}$

↓

↳ replace the old ones we forget:

$$i_t = \sigma(W_i \cdot [h_{t-1}, x_t] + b_i)$$

$$\tilde{C}_t = \tanh(W_c \cdot [h_{t-1}, x_t] + b_c).$$

↓

cell state update: $C_t = f_t \cdot C_{t-1} + i_t \cdot \tilde{C}_t$.

④. Output gate: $\underbrace{\text{filtered cell states}}_{\sigma(h_{t-1})}$ and older info.

$$o_t = \sigma(W_o \cdot [h_{t-1}, x_t] + b_o)$$

$$h_t = o_t \cdot \tanh(C_t)$$