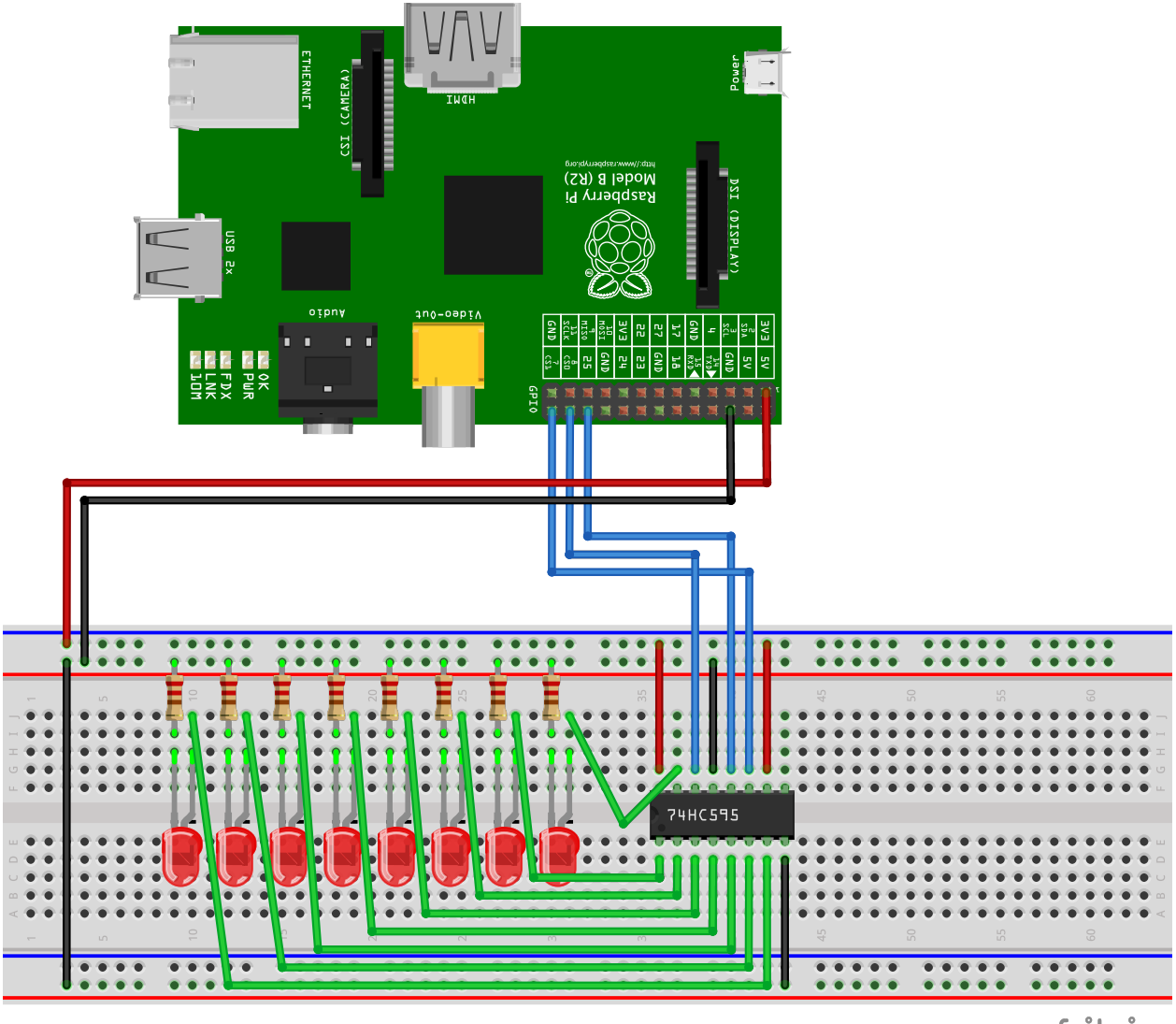
ETHERNET
CSI (CAMERA)
HDMI
Power
DSI (DISPLAY)
Raspberry Pi
Model B (R2)
http://www.raspberrypi.org
USB 2x
Audio
Video-out
GPIO
OK
PWR
FDX
LNK
100
74HC595

fritzing