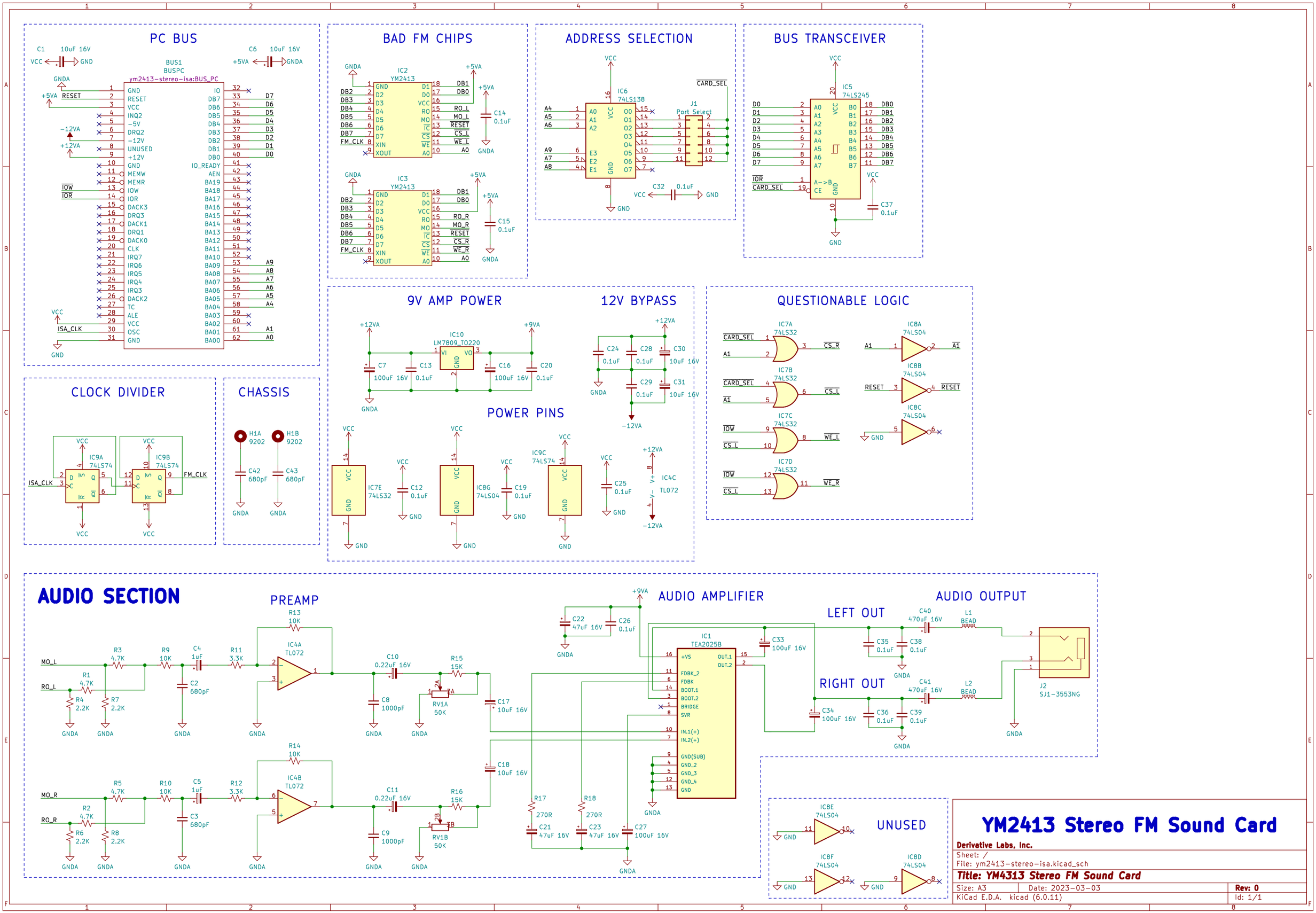
PC BUS
BUS1
BUSPC
ym2413-stereo-isa:BUS_PC
C1 10uF 16V
C6 10uF 16V
BAD FM CHIPS
IC2
YM2413
IC3
YM2413
C14 0.1uF
C15 0.1uF
ADDRESS SELECTION
IC6
74LS138
J1
Port Select
C32 0.1uF
BUS TRANSCEIVER
IC5
74LS245
C37 0.1uF
9V AMP POWER
IC10
LM7809_TO220
12V BYPASS
POWER PINS
IC7E
74LS32
IC8G
74LS04
IC9C
74LS74
IC4C
TL072
QUESTIONABLE LOGIC
IC7A
74LS32
IC7B
74LS32
IC7C
74LS32
IC7D
74LS32
IC8A
74LS04
IC8B
74LS04
IC8C
74LS04
CLOCK DIVIDER
IC9A
74LS74
IC9B
74LS74
CHASSIS
H1A
9202
H1B
9202
C42 680pF
C43 680pF
AUDIO SECTION
PREAMP
IC4A
TL072
IC4B
TL072
AUDIO AMPLIFIER
IC1
TEA2025B
AUDIO OUTPUT
LEFT OUT
RIGHT OUT
J2
SJ1-3553NG
UNUSED
IC8E
74LS04
IC8F
74LS04
IC8D
74LS04
YM2413 Stereo FM Sound Card
Derivative Labs, Inc.
Sheet: /
File: ym2413-stereo-isa.kicad_sch
Title: YM4313 Stereo FM Sound Card
Size: A3
Date: 2023-03-03
Rev: 0
KiCad E.D.A. kicad (6.0.11)
Id: 1/1