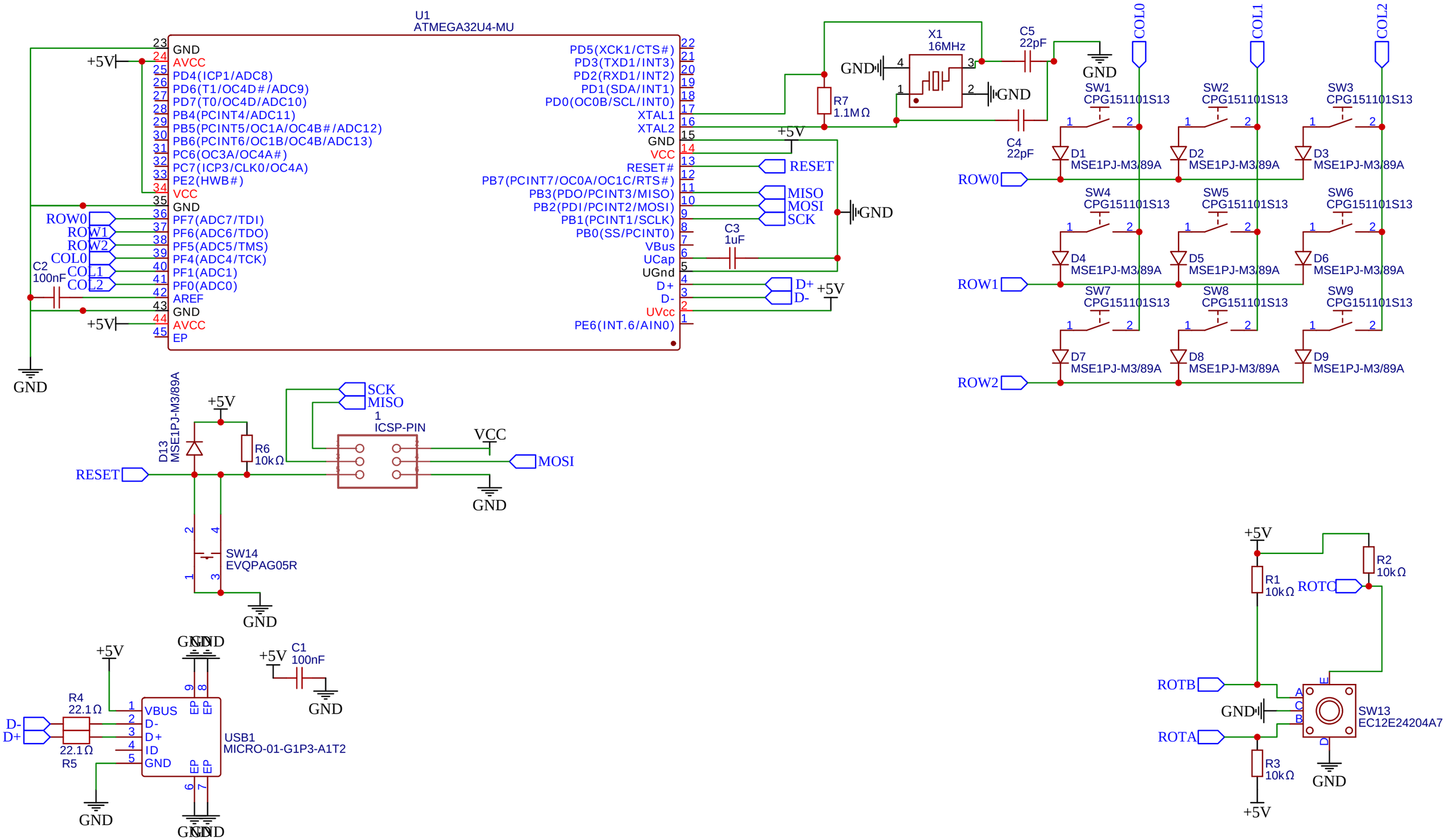

TITLE: Sheet_1	REV: 1.0
Company: Your Company	Sheet: 1/1
Date: 2023-10-29 Drawn By: rowanfoxx	