FPC connector

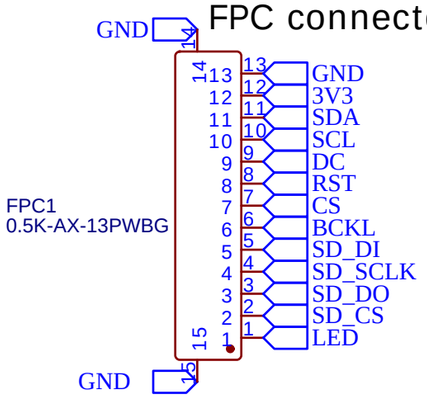

Connector for unit- features both TFT and SD card slot pins, plus a status LED.
13 pin 0.5mm pitch connector.
If same-sided cable is used, swap pins.

ST7735S TFT

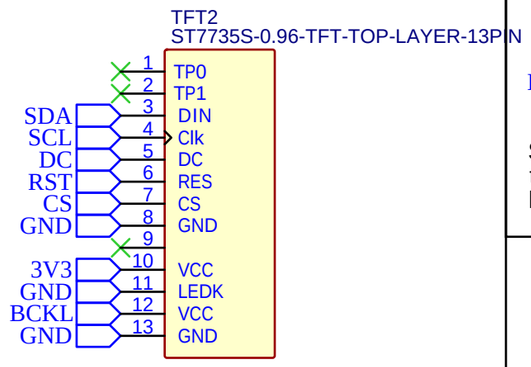

ST7735S 0.96" 13 pin "weld style" tft.
Dedicated SPI bus.
Backlight pin has N/C resistor jumper.

LED

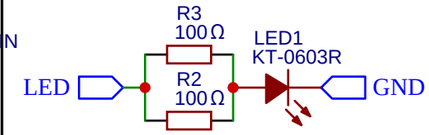

Status LED with resistor divider
to obtain ~50 ohms;
led current=~26ma

Pin header

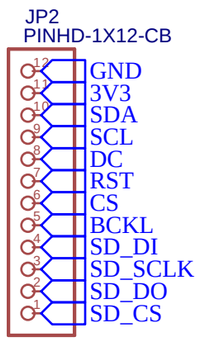

Normal 1x12 2.54mm pin headers.
Can be used either in breadboard or to wires not attached by default.

MicroSD card slot

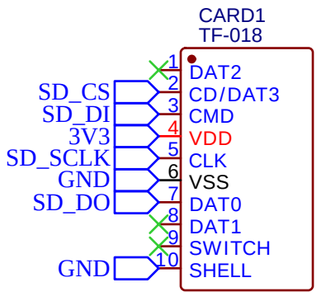

Standard MicroSD slot, on the shorter side.
Dedicated SPI pins, could be connected to TFT's SPI bus by MCU.

TITLE: Sheet_1		REV: 1.0
	Company: Your Company	Sheet: 1/1
	Date: 2023-02-19 Drawn By: RaspberryPiDude314	