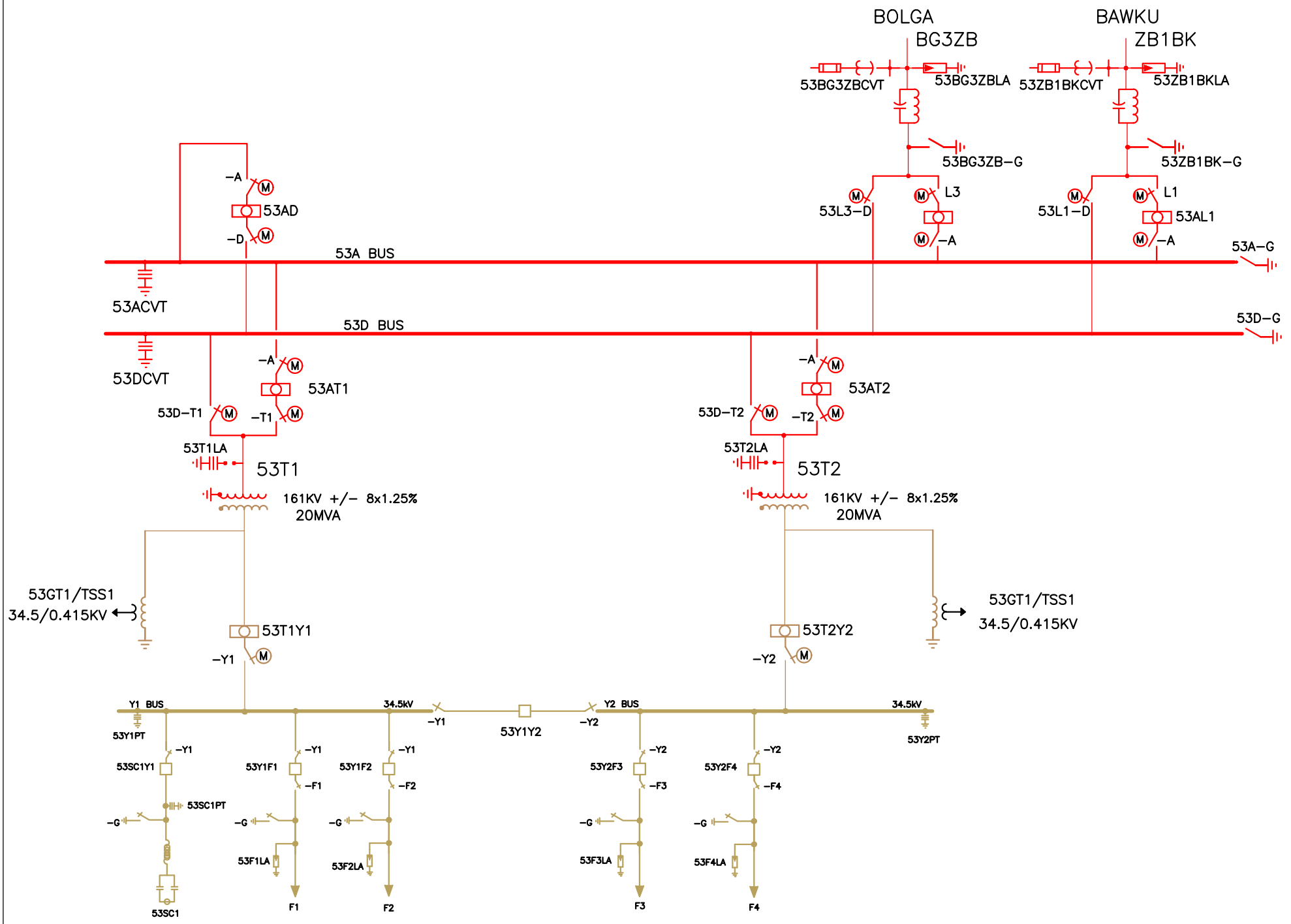

ZB53	SINGLE LINE OPERATING DRAWING FOR: ZEBILLA SUBSTATION	GRIDCo GHANA GRID COMPANY		DRAWN BY:	CHECKED BY:	APPROVED BY:
			NAME	AAA	AA	FAO
			DATE	FEBRUARY 2022	FEBRUARY 2022	FEBRUARY 2022
			SCALE	NONE		