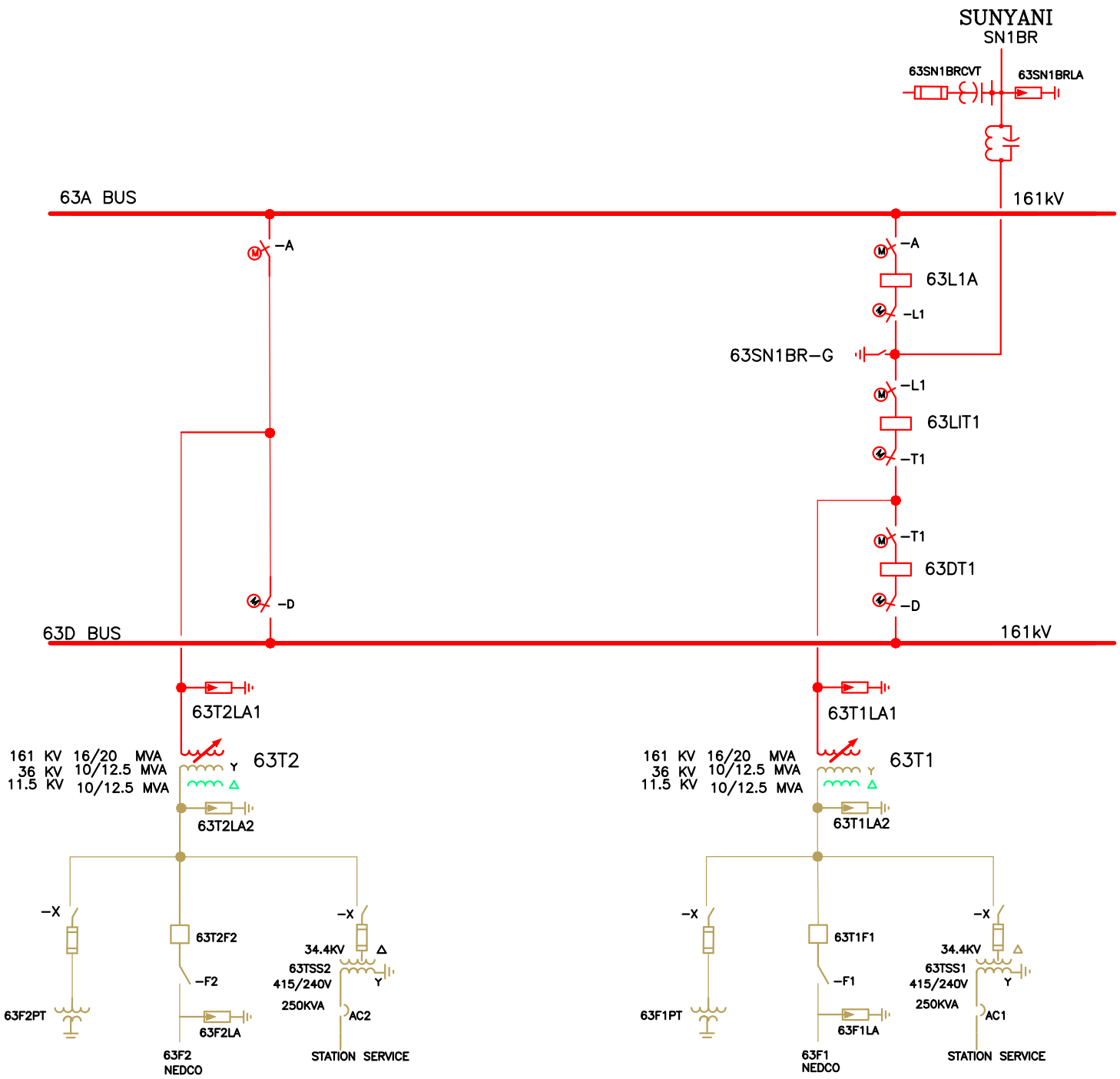

BR63	SINGLE LINE OPERATING DIAGRAM FOR: BREKUM SUBSTATION	GRIDCo GHANA GRID COMPANY		DRAWN BY:	CHECKED BY:	APPROVED BY:
			NAME	DFT	SKD	FAO
			DATE	FEBRUARY 2015	FEBRUARY 2015	FEBRUARY 2015
			SCALE	NONE		