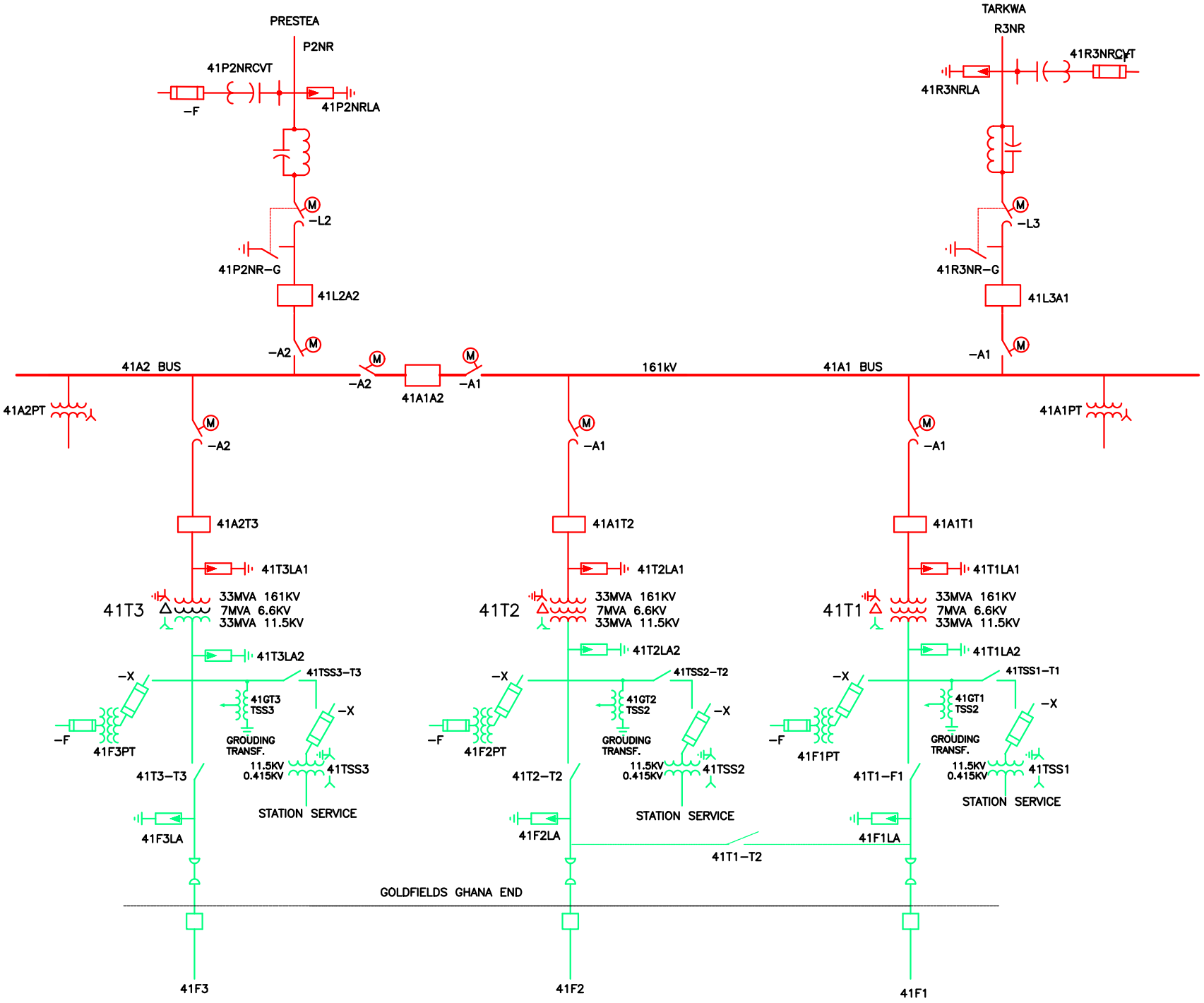

NR41	SINGLE LINE OPERATING DRAWING FOR: NEW TARKWA SUBSTATION	GRIDCo GHANA GRID COMPANY		DRAWN BY:	CHECKED BY:	APPROVED BY:
			NAME	DFT	SKD	FAO
			DATE	OCTOBER 2014	OCTOBER 2014	OCTOBER 2014
			SCALE	NONE		