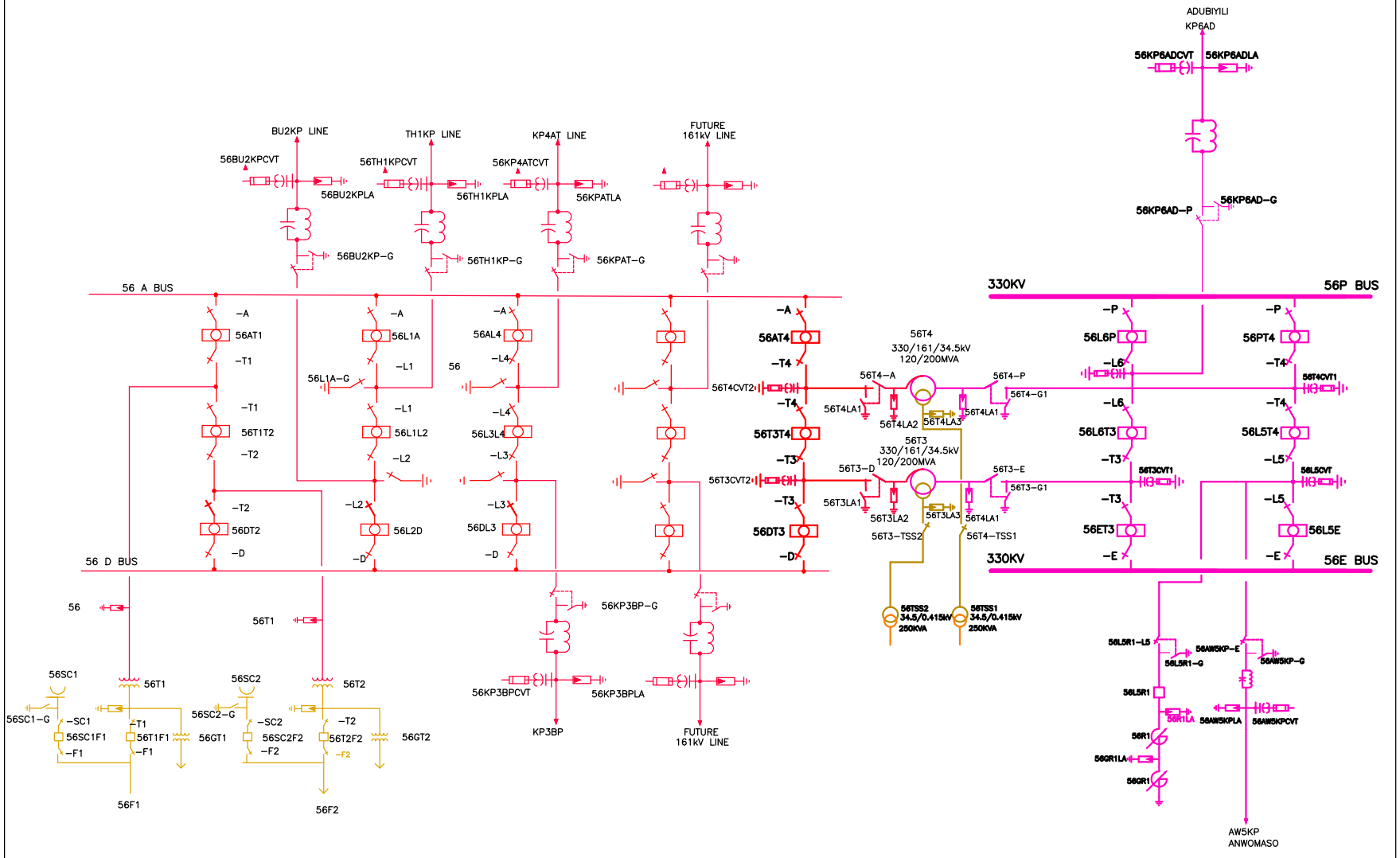

KP56

SINGLE LINE OPERATING DRAWING FOR:

KINTAMPO SUBSTATION

GRIDCo
GHANA GRID COMPANY

	DRAWN BY:	CHECKED BY:	APPROVED BY:
NAME	AAA	GC	FAO
DATE	NOVEMBER 2017	NOVEMBER 2017	NOVEMBER 2017
SCALE	NONE		