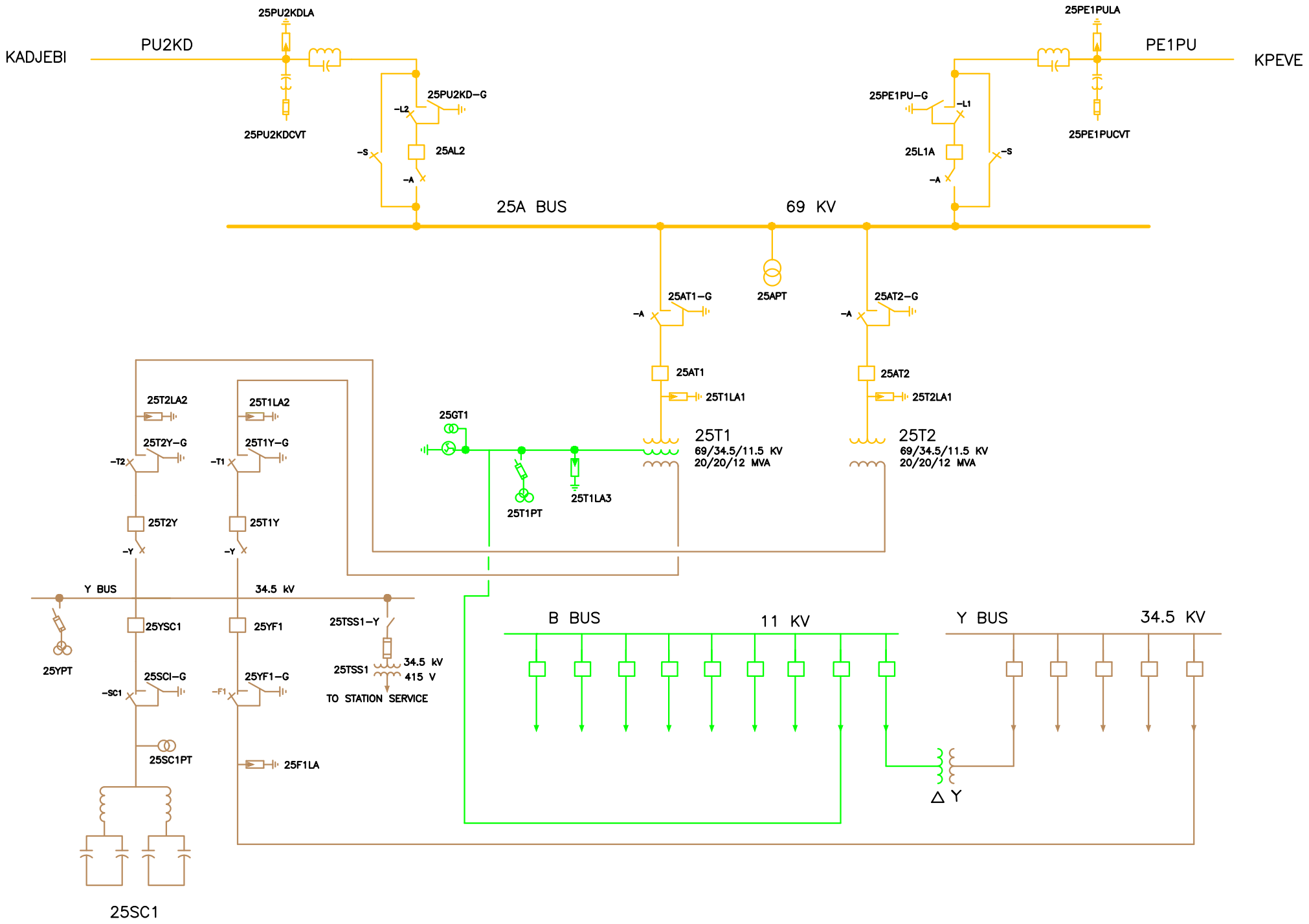

PU25	SINGLE LINE OPERATING DRAWING FOR: KPANDU SUBSTATION	GRIDCo GHANA GRID COMPANY		UPDATED BY:	CHECKED BY:	APPROVED BY:
			NAME	ALHASSAN A. AHMED	GEORGE COLEMAN	FRANK A. OTCHERE
			DATE	OCTOBER 2014	OCTOBER 2014	OCTOBER 2014
			SCALE	NONE		