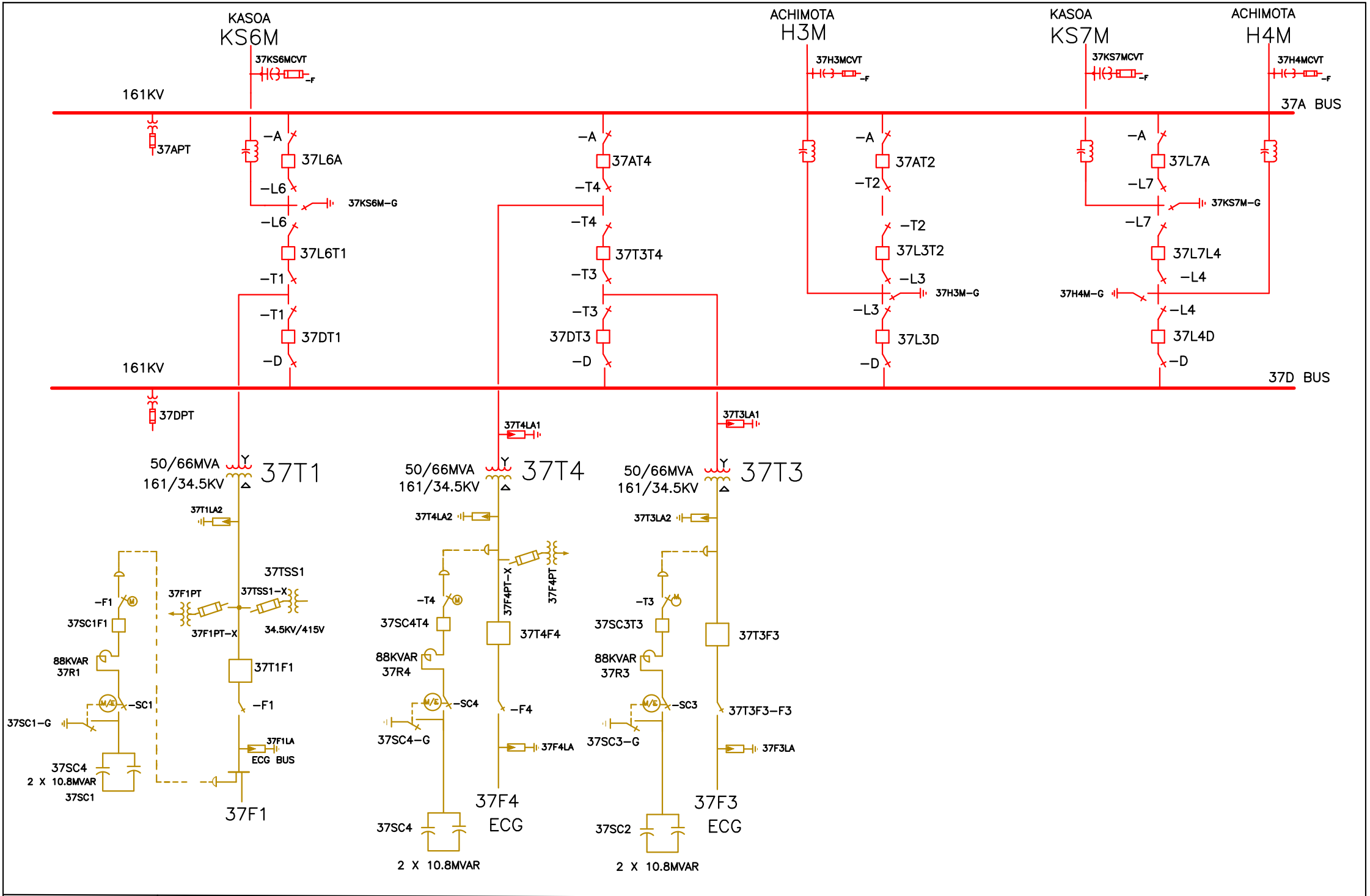

M37

SINGLE LINE OPERATING DIAGRAM FOR:

MALLAM SUBSTATION

GRIDCo
GHANA GRID COMPANY

	DRAWN BY:	CHECKED BY:	APPROVED BY:
NAME	AAA	AA	FAO
DATE	JAN 2021	JAN 2021	JAN 2021
SCALE	NONE		