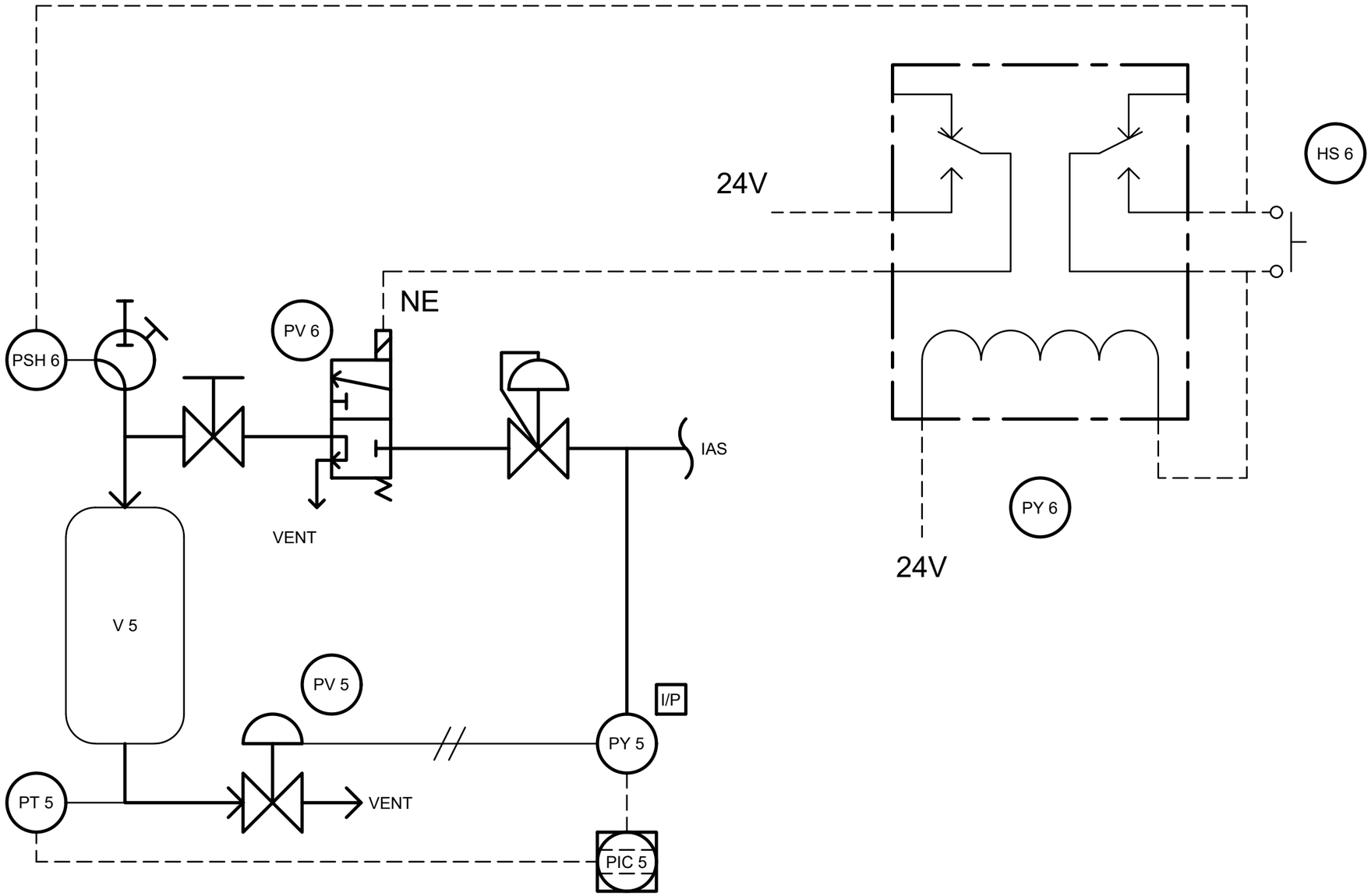

BELLINGHAM TECHNICAL COLLEGE		TITLE: RED IC263.2 PID	DWG NO:	
SCALE:	DATE: 14Jun2019	DR BY: KYLE MORRIS	SIZE: A	SHEET:1 OF 1