Lab

Analytical measurement loop: *Questions 91 and 92*, **completed objectives due by the end of day 5, section 3**

Exam

Day 6 of section 3

Capstone Assessment takes the place of a mastery exam (see question 93)

Specific objectives for the optional "mastery" exam (worth +5% on the proportional exam score if passed the very first time):

- Electricity Review: Design a simple circuit to achieve a stated objective
- Balancing a chemical reaction
- Explain the operating principle of a specified analyzer type
- Calculate temperatures or voltages in thermocouple and RTD circuits given access to thermocouple and RTD tables
- Solve for a specified variable in an algebraic formula (may contain exponents or logarithms)
- Determine the possibility of suggested faults in a 4-20 mA loop circuit given measured values (voltage, current), a schematic diagram, and reported symptoms
- Motor/relay/3phase/PLC Review: Determine status of PLC output given input conditions and RLL program
- INST252 Review: Identify cause of poor loop performance from a trend graph
- INST262 Review: Use decibels to calculate power gains and losses

---

Recommended daily schedule

Day 1

Theory session topic: Chemical concepts, terms, and symbols

Questions 1 through 20; answer questions 1-9 in preparation for discussion (remainder for practice)

Discuss the upcoming Capstone Assessment due by the end of the course (*Question 93*)

Day 2

Theory session topic: The Periodic Table, electron shells, and spectroscopy

Questions 21 through 40; answer questions 21-28 in preparation for discussion (remainder for practice)

Day 3

Theory session topic: Molecular quantities

Questions 41 through 60; answer questions 41-49 in preparation for discussion (remainder for practice)

Day 4

Theory session topic: Stoichiometry and energy in chemical reactions

Questions 61 through 80; answer questions 61-69 in preparation for discussion (remainder for practice)

Feedback questions *(81 through 90)* are optional and may be submitted for review at the end of the day

How To . . .

Access the worksheets and textbook: go to the *Socratic Instrumentation* website located at `http://www.ibiblio.org/kuphaldt/socratic/sinst` to find worksheets for every 2nd-year course section organized by quarter, as well as both the latest "stable" and "development" versions of the *Lessons In Industrial Instrumentation* textbook. Download and save these documents to your computer.

Maximize your learning: complete all homework *before* class starts, ready to be assessed as described in the "Inverted Session Formats" pages. Use every minute of class and lab time productively. Follow all the tips outlined in "Question 0" as well as your instructor's advice. Do not take constructive criticism personally. Make every reasonable effort to solve problems on your own before seeking help.

Identify upcoming assignments and deadlines: read the first page of each course worksheet.

Relate course days to calendar dates: reference the calendar spreadsheet file (`calendar.xlsx`), found on the BTC campus `Y:` network drive. A printed copy is posted in the Instrumentation classroom.

Locate industry documents assigned for reading: use the Instrumentation Reference provided by your instructor (on CD-ROM and on the BTC campus `Y:` network drive). There you will find a file named `00_index_OPEN_THIS_FILE.html` readable with any internet browser. Click on the "Quick-Start Links" to access assigned reading documents, organized per course, in the order they are assigned.

Study for the exams: Mastery exams assess specific skills critically important to your success, listed near the top of the front page of each course worksheet for your review. Familiarize yourself with this list and pay close attention when those topics appear in homework and practice problems. Proportional exams feature problems you haven't seen before that are solvable using general principles learned throughout the current and previous courses, for which the only adequate preparation is independent problem-solving practice every day. Answer the "feedback questions" (practice exams) in each course section to hone your problem-solving skills, as these are similar in scope and complexity to proportional exams. Answer these feedback independently (i.e. no help from classmates) in order to most accurately assess your readiness.

Calculate course grades: download the "Course Grading Spreadsheet" (`grades_template.xlsx`) from the Socratic Instrumentation website, or from the BTC campus `Y:` network drive. Enter your quiz scores, test scores, lab scores, and attendance data into this Excel spreadsheet and it will calculate your course grade. You may compare your calculated grades against your instructors' records at any time.

Identify courses to register for: read the "Sequence" page found in each worksheet.

Receive extra instructor help: ask during lab time, or during class time, or by appointment. Tony may be reached by email at `tony.kuphaldt@btc.edu` or by telephone at 360-752-8477.

Identify job openings: regularly monitor job-search websites. Set up informational interviews at workplaces you are interested in. Participate in jobshadows and internships. Apply to jobs long before graduation, as some employers take *months* to respond! Check your BTC email account daily for alerts.

Impress employers: sign the FERPA release form granting your instructors permission to share academic records, then make sure your performance is worth sharing. Document your project and problem-solving experiences for reference during interviews. Honor all your commitments.

Begin your career: participate in jobshadows and internships while in school to gain experience and references. Take the first Instrumentation job that pays the bills, and give that employer at least two years of good work to pay them back for the investment they have made in you. Employers look at delayed employment, as well as short employment spans, very negatively. Failure to pass a drug test is an immediate disqualifier, as is falsifying any information. Criminal records may also be a problem.

file `howto`

General Values, Expectations, and Standards

Success in this career requires professional integrity, resourcefulness, persistence, close attention to detail, and intellectual curiosity. If you are ever in doubt as to the values you should embody, just ask yourself what kind of a person you would prefer to hire for your own enterprise. Those same values will be upheld within this program.

Learning is the top priority in this program. Every circumstance, every incident, every day will be treated as a learning opportunity, every mistake as a "teachable moment". Every form of positive growth, not just academic ability, will be regarded as real learning.

Responsibility means *ensuring* the desired outcome, not just *trying* to achieve the outcome. If your efforts do not yield the expected results, only you can make it right.

Integrity means being honest and forthright in all your words and actions, doing your very best every time and never taking credit for the achievement of another.

Safety means doing every job correctly and ensuring others are not endangered. Lab safety standards include wearing closed-toed shoes and safety glasses in the lab room during lab hours, wearing ear protection around loud sounds, using ladders to reach high places, using proper lock-out/tag-out procedures, no energized electrical work above 30 volts without an instructor present in the lab room, and no power tool use without an instructor present in the lab room.

Diligence means exercising self-discipline and persistence in your studies, realizing that hard work is a necessary condition for success. This means, among other things, investing the necessary time and effort in studying, reading instructions, paying attention to details, utilizing the skills and tools you already possess, and avoiding shortcuts.

Mastery means the job is not done until it is done *correctly*: all objectives achieved, all problems solved, all documentation complete, and no errors remaining.

Self-management means allocating your resources (time, equipment, labor) wisely, and not just focusing on the nearest deadline.

Communication means clearly conveying your thoughts and paying attention to what others convey. Remember that no one can read your mind, and so it is incumbent upon you to communicate any and all important information.

Teamwork means working constructively with your classmates so as to maximize their learning as well as your own.

Initiative means recognizing needs and taking action to meet those needs without encouragement or direction from others.

Representation means your actions are a reflection of this program and not just of yourself. Doors of opportunity for all BTC graduates may be opened or closed by your own conduct. Unprofessional behavior during tours, jobshadows, internships, and/or jobs reflects poorly on the program and will negatively bias employers.

Trustworthiness is the result of consistently exercising these values: people will recognize you as someone they can rely on to get the job done, and therefore someone they would want to hire.

Respect means acknowledging the intrinsic value, capabilities, and responsibilities of those around you. Respect may be gained by consistent demonstration of valued behaviors, and it may be lost through betrayal of trust.

Punctuality and Attendance: late arrivals are penalized at a rate of 1% grade deduction per incident. Absence is penalized at a rate of 1% per hour (rounded to the nearest hour) except when employment-related, school-related, weather-related, or required by law (e.g. court summons). Absences may be made up by directing the instructor to apply "sick hours" (12 hours of sick time available per quarter). Classmates may donate their unused sick hours. Sick hours may not be applied to unannounced absences, so be sure to alert your instructor and teammates as soon as you know you will be absent or late. Absence on an exam day will result in a zero score for that exam, unless due to a documented emergency.

Mastery: any assignment or objective labeled as "mastery" must be completed with 100% competence (with multiple opportunities to re-try). Failure to complete by the deadline date caps your grade at a C−. Failure to complete by the end of the *next* school day results in a failing (F) grade for that course.

Time Management: Use all available time wisely and productively. Work on other useful tasks (e.g. homework, feedback questions, job searching) while waiting for other activities or assessments to begin. Trips to the cafeteria for food or coffee, smoke breaks, etc. must not interfere with team participation.

Orderliness: Keep your work area clean and orderly, discarding trash, returning tools at the end of every lab session, and participating in all scheduled lab clean-up sessions. Project wiring, especially in shared areas such as junction boxes, must not be left in disarray at the end of a lab shift. Label any failed equipment with a detailed description of its symptoms.

Independent Study: the "inverted" instructional model used in this program requires independent reading and problem-solving, where every student must demonstrate their learning at the start of the class session. Question 0 of every worksheet lists practical study tips. The "Inverted Session Formats" pages found in every worksheet outline the format and grading standards for inverted class sessions.

Independent Problem-Solving: make an honest effort to solve every problem before seeking help. When working in the lab, help will not be given to you unless and until you run your own diagnostic tests.

Teamwork: inform your teammates if you need to leave the work area for any reason. Any student regularly compromising team performance through absence, tardiness, disrespect, or other disruptive behavior(s) will be removed from the team and required to complete all labwork individually. The same is true for students found inappropriately relying on teammates.

Communication: check your email account daily for important messages from your instructor. Ask the instructor to clarify any assignment or exam question you find confusing, and express your work clearly and compellingly.

Academic Progress: your instructor will record your academic achievement, as well as comments on any negative behavior, and will share all these records with employers provided you have signed the FERPA release form. You are welcome to see these records at any time, and are encouraged to track your own academic progress using the grade spreadsheet template.

Office Hours: your instructor's office hours are by appointment, except in cases of emergency. Email is the preferred method for setting up an appointment with your instructor to discuss something in private.

Grounds for Failure: a failing (F) grade will be earned in any course if any mastery objectives are past deadline by more than one school day, or if any of the following behaviors are demonstrated: false testimony (lying) to your instructor, cheating on any assignment or assessment, plagiarism (presenting another's work as your own), willful violation of a safety policy, theft, harassment, intoxication, or destruction of property. Such behaviors are grounds for immediate termination in this career, and as such will not be tolerated here.

file `expectations`

Program Outcomes for Instrumentation and Control Technology (BTC)

#1 Communication

Communicate and express concepts and ideas across a variety of media (verbal, written, graphical) using industry-standard terms.

#2 Time management

Arrives on time and prepared to work; Budgets time and meets deadlines when performing tasks and projects.

#3 Safety

Complies with national, state, local, and college safety regulations when designing and performing work on systems.

#4 Analysis and Diagnosis

Analyze, evaluate, and diagnose systems related to instrumentation and control including electrical and electronic circuits, fluid power and signaling systems, computer networks, and mechanisms; Select and apply correct mathematical techniques to these analytical and diagnostic problems; Select and correctly use appropriate test equipment to collect data.

#5 Design and Commissioning

Select, design, construct, configure, and install components necessary for the proper function of systems related to instrumentation and control, applying industry standards and verifying correct system operation when complete.

#6 System optimization

Improve technical system functions by collecting data and evaluating performance; Implement strategies to optimize the function of these systems.

#7 Calibration

Assess instrument accuracy and correct inaccuracies using appropriate calibration procedures and test equipment; Select and apply correct mathematical techniques to these calibration tasks.

#8 Documentation

Interpret and create technical documents (e.g. electronic schematics, loop diagrams, functional diagrams, P&IDs, graphs, narratives) according to industry standards.

#9 Independent learning

Select and research information sources to learn new principles, technologies, and techniques.

#10 Job searching

Develop a professional resume and research job openings in the field of industrial instrumentation.

file `outcomes_program`

INST 242 Course Outcomes

Each and every outcome in this course is assessed at a mastery level (i.e. 100% competence)

- Demonstrate proper use of safety equipment and application of safe procedures while using power tools, and working on live systems. [Ref: Program Learning Outcome #3]
- Communicate effectively with teammates to plan work, arrange for absences, and share responsibilities in completing all labwork. [Ref: Program Learning Outcomes #1 and #2]
- Construct and commission a working analytical loop consisting of a chemical analyzer, signal wiring, and indicator. [Ref: Program Learning Outcome #5]
- Generate an accurate loop diagram compliant with ISA standards documenting your team's analytical measurement system. [Ref: Program Learning Outcome #8]
- Calibrate analyzer to specified accuracy using industry-standard calibration equipment. [Ref: Program Learning Outcome #7]
- Design and build a circuit to fulfill a function randomly selected by the instructor (voltage divider, passive filter, capacitive time-delay, or phase shift network) and demonstrate its proper operation using a signal generator and oscilloscope. [Ref: Program Learning Outcome #5]
- Diagnose a random fault placed in another team's analytical measurement system by the instructor within a limited time using no test equipment except a multimeter, logically justifying your steps in the instructor's direct presence. [Ref: Program Learning Outcome #4]
- Construct a working control loop consisting of a pre-made process unit with transmitter and final control element, properly connected to a controller, within a limited time. Both the process and the controller are randomly selected by the instructor, with measurement range values specified by the instructor. [Ref: Program Learning Outcomes #5 and #9]

file `outcomes_INST242`

Sequence of second-year Instrumentation courses

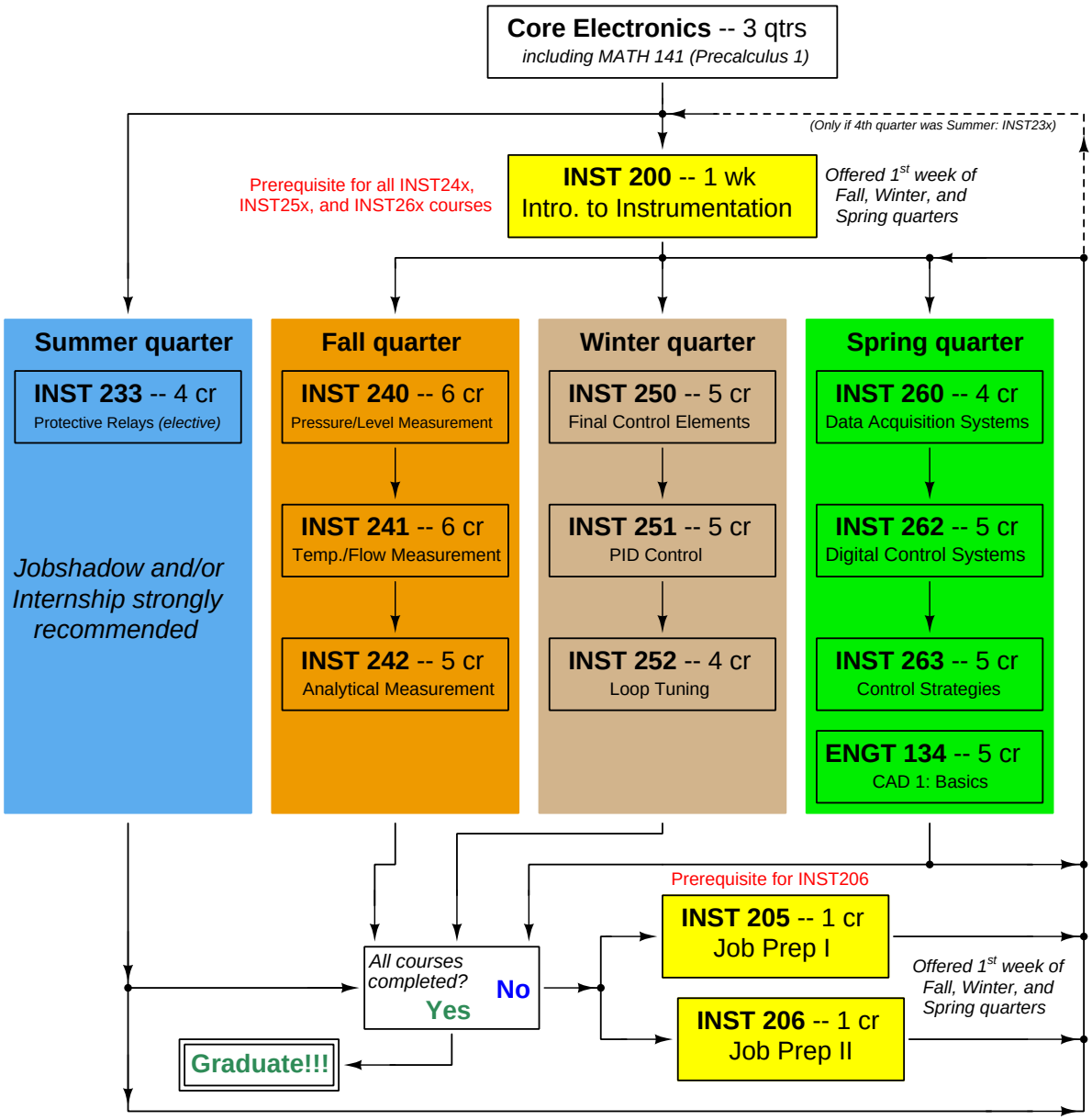

The particular sequence of courses you take during the second year depends on when you complete all first-year courses and enter the second year. Since students enter the second year of Instrumentation at four different times (beginnings of Summer, Fall, Winter, and Spring quarters), the particular course sequence for any student will likely be different from the course sequence of classmates.

Some second-year courses are only offered in particular quarters with those quarters not having to be in sequence, while others are offered three out of the four quarters and must be taken in sequence. The following layout shows four typical course sequences for second-year Instrumentation students, depending on when they first enter the second year of the program:

file sequence

General tool and supply list

Wrenches

- Combination (box- and open-end) wrench set, 1/4" to 3/4" – *the most important wrench sizes are 7/16", 1/2", 9/16", and 5/8"; get these immediately!*
- Adjustable wrench, 6" handle (sometimes called "Crescent" wrench)
- Hex wrench ("Allen" wrench) set, fractional – 1/16" to 3/8"
- *Optional:* Hex wrench ("Allen" wrench) set, metric – 1.5 mm to 10 mm
- *Optional:* Miniature combination wrench set, 3/32" to 1/4" (sometimes called an "ignition wrench" set)

Note: *always maximize surface engagement on a fastener's head to reduce stress on that fastener. (e.g. Using box-end wrenches instead of adjustable wrenches; using the proper size and type of screwdriver; never using any tool that mars the fastener such as pliers or vise-grips unless absolutely necessary.)*

Pliers

- Needle-nose pliers
- Diagonal wire cutters (sometimes called "dikes")

Screwdrivers

- Slotted, 1/8" and 1/4" shaft
- Phillips, #1 and #2
- Jeweler's screwdriver set
- *Optional:* Magnetic multi-bit screwdriver (e.g. Klein Tools model 70035)

Electrical

- Multimeter, Fluke model 87-IV or better
- Assortment of alligator-clip style jumper wires
- Soldering iron (10 to 40 watt) and rosin-core solder
- Resistor, potentiometer, diode assortments (from first-year lab kits)
- Package of insulated compression-style fork terminals (14 to 18 AWG wire size, #10 stud size)
- Wire strippers/terminal crimpers for 10 AWG to 18 AWG wire and insulated terminals
- *Optional:* ratcheting terminal crimp tool (e.g. Paladin 1305, Ferrules Direct FDT10011, or equivalent)

Safety

- Safety glasses or goggles (available at BTC bookstore)
- Earplugs (available at BTC bookstore)

Miscellaneous

- Simple scientific calculator (non-programmable, non-graphing, no conversions), TI-30Xa or TI-30XIIS recommended. Required for some exams!
- Portable personal computer capable of wired Ethernet connectivity, Wi-Fi connectivity, displaying PDF documents, creating text documents, creating and viewing spreadsheets, running PLC programming software (MS Windows only), and executing command-line utilities such as `ping`.
- Masking tape (for making temporary labels)
- Permanent marker pen
- Teflon pipe tape
- Utility knife
- Tape measure, 12 feet minimum
- Flashlight

file `tools`

Methods of instruction

This course develops self-instructional and diagnostic skills by placing students in situations where they are required to research and think independently. In all portions of the curriculum, the goal is to avoid a passive learning environment, favoring instead *active engagement* of the learner through reading, reflection, problem-solving, and experimental activities. The curriculum may be roughly divided into two portions: *theory* and *practical*. All "theory" sessions follow the *inverted* format and contain virtually no lecture.

Inverted theory sessions

The basic concept of an "inverted" learning environment is that the traditional allocations of student time are reversed: instead of students attending an instructor-led session to receive new information and then practicing the application of that information outside of the classroom in the form of homework, students in an inverted class encounter new information outside of the classroom via homework and apply that information in the classroom session under the instructor's tutelage.

A natural question for instructors, then, is what their precise role is in an inverted classroom and how to organize that time well. Here I will list alternate formats suitable for an inverted classroom session, each of them tested and proven to work.

Small sessions

Students meet with instructors in small groups for short time periods. Groups of 4 students meeting for 30 minutes works very well, but groups as large as 8 students apiece may be used if time is limited. Each of these sessions begins with a 5 to 10 minute graded inspection of homework with individual questioning, to keep students accountable for doing the homework. The remainder of the session is a dialogue focusing on the topics of the day, the instructor challenging each student on the subject matter in Socratic fashion, and also answering students' questions. A second grade measures each student's comprehension of the subject matter by the end of the session.

This format also works via teleconferencing, for students unable to attend a face-to-face session on campus.

Large sessions

Students meet with instructors in a standard classroom (normal class size and period length). Each of these sessions begins with a 10 minute graded quiz (closed-book) on the homework topic(s), to keep students accountable for doing the homework. Students may leave the session as soon as they "check off" with the instructor in a Socratic dialogue as described above (instructor challenging each student to assess their comprehension, answering questions, and grading the responses). Students sign up for check-off on the whiteboard when they are ready, typically in groups of no more than 4. Alternatively, the bulk of the class session may be spent answering student questions in small groups, followed by another graded quiz at the end.

Correspondence

This format works for students unable to attend a "face-to-face" session, and who must correspond with the instructor via email or other asynchronous medium. Each student submits a thorough presentation of their completed homework, which the instructor grades for completeness and accuracy. The instructor then replies back to the student with challenge questions, and also answers questions the student may have. As with the previous formats, the student receives another grade assessing their comprehension of the subject matter by the close of the correspondence dialogue.

In all formats, students are held accountable for completion of their homework, "completion" being defined as successfully interpreting the given information from source material (e.g. accurate outlines of reading or video assignments) and constructive effort to solve given problems. It must be understood in an inverted learning environment that students *will* have legitimate questions following a homework assignment, and that it is therefore unreasonable to expect mastery of the assigned subject matter. What is reasonable to expect from each and every student is a basic outline of the source material (reading or video assignments) complete with major terms defined and major concepts identified, plus a good-faith effort to solve every problem. Question 0 (contained in every worksheet) lists multiple strategies for effective study and problem-solving.

Sample rubric for pre-assessments

- **No credit** = Any homework question unattempted (i.e. no effort shown on one or more questions); incomprehensible writing; failure to follow clear instruction(s)
- **Half credit** = Misconception(s) on any major topic explained in the assigned reading; answers shown with no supporting work; verbatim copying of text rather than written in your own words; outline missing important topic(s); unable to explain the outline or solution methods represented in written work
- **Full credit** = Every homework question answered, with any points of confusion clearly articulated; all important concepts from reading assignments accurately expressed in the outline and clearly articulated when called upon by the instructor to explain

The minimum expectation at the start of every student-instructor session is that all students have made a good-faith effort to complete 100% of their assigned homework. This does not necessarily mean all answers will be correct, or that all concepts are fully understood, because one of the purposes of the meeting between students and instructor is to correct remaining misconceptions and answer students' questions. However, experience has shown that without accountability for the homework, a substantial number of students will not put forth their best effort and that this compromises the whole learning process. Full credit is reserved for good-faith effort, where each student thoughtfully applies the study and problem-solving recommendations given to them (see Question 0).

Sample rubric for post-assessments

- **No credit** = Failure to comprehend one or more key concepts; failure to apply logical reasoning to the solution of problem(s); no contribution to the dialogue
- **Half credit** = Some misconceptions persist by the close of the session; problem-solving is inconsistent; limited contribution to the dialogue
- **Full credit** = Socratic queries answered thoughtfully; effective reasoning applied to problems; ideas communicated clearly and accurately; responds intelligently to questions and statements made by others in the session; adds new ideas and perspectives

The minimum expectation is that each and every student engages with the instructor and with fellow students during the Socratic session: posing intelligent questions of their own, explaining their reasoning when challenged, and otherwise positively contributing to the discussion. Passive observation and listening is not an option here – every student must be an active participant, contributing something original to every dialogue. If a student is confused about any concept or solution, it is their responsibility to ask questions and seek resolution.

If a student happens to be absent for a scheduled class session and is therefore unable to be assessed on that day's study, they may schedule a time with the instructor to demonstrate their comprehension at some later date (before the end of the quarter when grades must be submitted). These same standards of performance apply equally make-up assessments: either inspection of homework or a closed-book quiz for the pre-assessment, and either a Socratic dialogue with the instructor or another closed-book quiz for the post-assessment.

Lab sessions

In the lab portion of each course, students work in teams to install, configure, document, calibrate, and troubleshoot working instrument loop systems. Each lab exercise focuses on a different type of instrument, with a limited time period typically for completion. An ordinary lab session might look like this:

(1) Start of practical (lab) session: announcements and planning
  (a) The instructor makes general announcements to all students
  (b) The instructor works with team to plan that day's goals, making sure each team member has a clear idea of what they should accomplish
(2) Teams work on lab unit completion according to recommended schedule:
  (First day) Select and bench-test instrument(s), complete prototype sketch of project
  (One day) Connect instrument(s) into a complete loop
  (One day) Each team member drafts their own loop documentation, inspection done as a team (with instructor)
  (One or two days) Each team member calibrates/configures the instrument(s)
  (Remaining days, up to last) Each team member troubleshoots the instrument loop
(3) End of practical (lab) session: debriefing where each team reports on their work to the whole class

Troubleshooting assessments must meet the following guidelines:

- Troubleshooting must be performed *on a system the student did not build themselves.* This forces students to rely on another team's documentation rather than their own memory of how the system was built.
- Each student must individually demonstrate proper troubleshooting technique.
- Simply finding the fault is not good enough. Each student must consistently demonstrate sound reasoning while troubleshooting.
- If a student fails to properly diagnose the system fault, they must attempt (as many times as necessary) with different scenarios until they do, reviewing any mistakes with the instructor after each failed attempt.

Distance delivery methods

Sometimes the demands of life prevent students from attending college 6 hours per day. In such cases, there exist alternatives to the normal 8:00 AM to 3:00 PM class/lab schedule, allowing students to complete coursework in non-traditional ways, at a "distance" from the college campus proper.

For such "distance" students, the same worksheets, lab activities, exams, and academic standards still apply. Instead of working in small groups and in teams to complete theory and lab sections, though, students participating in an alternative fashion must do all the work themselves. Participation via teleconferencing, video- or audio-recorded small-group sessions, and such is encouraged and supported.

There is no recording of hours attended or tardiness for students participating in this manner. The pace of the course is likewise determined by the "distance" student. Experience has shown that it is a benefit for "distance" students to maintain the same pace as their on-campus classmates whenever possible.

In lieu of small-group activities and class discussions, comprehension of the theory portion of each course will be ensured by completing and submitting detailed answers for *all* worksheet questions, not just passing daily quizzes as is the standard for conventional students. The instructor will discuss any incomplete and/or incorrect worksheet answers with the student, and ask that those questions be re-answered by the student to correct any misunderstandings before moving on.

Labwork is perhaps the most difficult portion of the curriculum for a "distance" student to complete, since the equipment used in Instrumentation is typically too large and expensive to leave the school lab facility. "Distance" students must find a way to complete the required lab activities, either by arranging time in the school lab facility and/or completing activities on equivalent equipment outside of school (e.g. at their place of employment, if applicable). Labwork completed outside of school must be validated by a supervisor and/or documented via photograph or videorecording.

Conventional students may opt to switch to "distance" mode at any time. This has proven to be a benefit to students whose lives are disrupted by catastrophic events. Likewise, "distance" students may switch back to conventional mode if and when their schedules permit. Although the existence of alternative modes of student participation is a great benefit for students with challenging schedules, it requires a greater investment of time and a greater level of self-discipline than the traditional mode where the student attends school for 6 hours every day. No student should consider the "distance" mode of learning a way to have more free time to themselves, because they will actually spend more time engaged in the coursework than if they attend school on a regular schedule. It exists merely for the sake of those who cannot attend during regular school hours, as an alternative to course withdrawal.

file `distance`

Metric prefixes and conversion constants

- **Metric prefixes**
- Yotta = 10^{24} Symbol: Y
- Zeta = 10^{21} Symbol: Z
- Exa = 10^{18} Symbol: E
- Peta = 10^{15} Symbol: P
- Tera = 10^{12} Symbol: T
- Giga = 10^{9} Symbol: G
- Mega = 10^{6} Symbol: M
- Kilo = 10^{3} Symbol: k
- Hecto = 10^{2} Symbol: h
- Deca = 10^{1} Symbol: da
- Deci = 10^{-1} Symbol: d
- Centi = 10^{-2} Symbol: c
- Milli = 10^{-3} Symbol: m
- Micro = 10^{-6} Symbol: μ
- Nano = 10^{-9} Symbol: n
- Pico = 10^{-12} Symbol: p
- Femto = 10^{-15} Symbol: f
- Atto = 10^{-18} Symbol: a
- Zepto = 10^{-21} Symbol: z
- Yocto = 10^{-24} Symbol: y

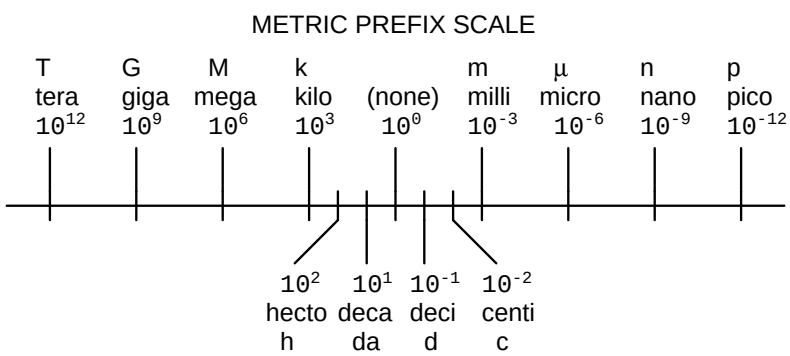

- **Conversion formulae for temperature**
- ^{o}F = (^{o}C)(9/5) + 32
- ^{o}C = (^{o}F - 32)(5/9)
- ^{o}R = ^{o}F + 459.67
- K = ^{o}C + 273.15

Conversion equivalencies for distance

1 inch (in) = 2.540000 centimeter (cm)

1 foot (ft) = 12 inches (in)

1 yard (yd) = 3 feet (ft)

1 mile (mi) = 5280 feet (ft)

Conversion equivalencies for volume

1 gallon (gal) = 231.0 cubic inches (in^3) = 4 quarts (qt) = 8 pints (pt) = 128 fluid ounces (fl. oz.) = 3.7854 liters (l)

1 milliliter (ml) = 1 cubic centimeter (cm^3)

Conversion equivalencies for velocity

1 mile per hour (mi/h) = 88 feet per minute (ft/m) = 1.46667 feet per second (ft/s) = 1.60934 kilometer per hour (km/h) = 0.44704 meter per second (m/s) = 0.868976 knot (knot – international)

Conversion equivalencies for mass

1 pound (lbm) = 0.45359 kilogram (kg) = 0.031081 slugs

Conversion equivalencies for force

1 pound-force (lbf) = 4.44822 newton (N)

Conversion equivalencies for area

1 acre = 43560 square feet (ft^2) = 4840 square yards (yd^2) = 4046.86 square meters (m^2)

Conversion equivalencies for common pressure units (either all gauge or all absolute)

1 pound per square inch (PSI) = 2.03602 inches of mercury (in. Hg) = 27.6799 inches of water (in. W.C.) = 6.894757 kilo-pascals (kPa) = 0.06894757 bar

1 bar = 100 kilo-pascals (kPa) = 14.504 pounds per square inch (PSI)

Conversion equivalencies for absolute pressure units (only)

1 atmosphere (Atm) = 14.7 pounds per square inch absolute (PSIA) = 101.325 kilo-pascals absolute (kPaA) = 1.01325 bar (bar) = 760 millimeters of mercury absolute (mmHgA) = 760 torr (torr)

Conversion equivalencies for energy or work

1 british thermal unit (Btu – "International Table") = 251.996 calories (cal – "International Table") = 1055.06 joules (J) = 1055.06 watt-seconds (W-s) = 0.293071 watt-hour (W-hr) = 1.05506×10^{10} ergs (erg) = 778.169 foot-pound-force (ft-lbf)

Conversion equivalencies for power

1 horsepower (hp – 550 ft-lbf/s) = 745.7 watts (W) = 2544.43 british thermal units per hour (Btu/hr) = 0.0760181 boiler horsepower (hp – boiler)

Acceleration of gravity (free fall), Earth standard

9.806650 meters per second per second (m/s^2) = 32.1740 feet per second per second (ft/s^2)

Physical constants

Speed of light in a vacuum (c) = 2.9979×10^8 meters per second (m/s) = 186,281 miles per second (mi/s)

Avogadro's number (N_A) = 6.022×10^{23} per mole (mol^{-1})

Electronic charge (e) = 1.602×10^{-19} Coulomb (C)

Boltzmann's constant (k) = 1.38×10^{-23} Joules per Kelvin (J/K)

Stefan-Boltzmann constant (σ) = 5.67×10^{-8} Watts per square meter-Kelvin^4 ($\text{W/m}^2\cdot\text{K}^4$)

Molar gas constant (R) = 8.314 Joules per mole-Kelvin (J/mol-K)

Properties of Water

Freezing point at sea level = 32^oF = 0^oC

Boiling point at sea level = 212^oF = 100^oC

Density of water at 4^oC = 1000 kg/m^3 = 1 g/cm^3 = 1 kg/liter = 62.428 lb/ft^3 = 1.94 slugs/ft^3

Specific heat of water at 14^oC = 1.00002 calories/g·^{o}C = 1 BTU/lb·^{o}F = 4.1869 Joules/g·^{o}C

Specific heat of ice $\approx$ 0.5 calories/g·^{o}C

Specific heat of steam $\approx$ 0.48 calories/g·^{o}C

Absolute viscosity of water at 20^oC = 1.0019 centipoise (cp) = 0.0010019 Pascal-seconds (Pa·s)

Surface tension of water (in contact with air) at 18^oC = 73.05 dynes/cm

pH of pure water at 25° C = 7.0 (*pH scale = 0 to 14*)

Properties of Dry Air at sea level

Density of dry air at 20^oC and 760 torr = 1.204 mg/cm^3 = 1.204 kg/m^3 = 0.075 lb/ft^3 = 0.00235 slugs/ft^3

Absolute viscosity of dry air at 20^oC and 760 torr = 0.018 centipoise (cp) = 1.8×10^{-5} Pascal-seconds (Pa·s)

file `conversion_constants`

Question 0

How to get the most out of academic reading:

- Articulate your thoughts as you read (i.e. "have a conversation" with the author). This will develop *metacognition*: active supervision of your own thoughts. Write your thoughts as you read, noting points of agreement, disagreement, confusion, epiphanies, and connections between different concepts or applications. These notes should also document important math formulae, explaining in your own words what each formula means and the proper units of measurement used.
- Outline, don't highlight! Writing your own summary or outline is a far more effective way to comprehend a text than simply underlining and highlighting key words. A suggested ratio is one sentence of your own thoughts per paragraph of text read. Note points of disagreement or confusion to explore later.
- Work through all mathematical exercises shown within the text, to ensure you understand all the steps.
- Imagine explaining concepts you've just learned to someone else. Teaching forces you to distill concepts to their essence, thereby clarifying those concepts, revealing assumptions, and exposing misconceptions. Your goal is to create the simplest explanation that is still technically accurate.
- Write your own questions based on what you read, as though you are a teacher preparing to test students' comprehension of the subject matter.

How to effectively problem-solve and troubleshoot:

- Rely on principles, not procedures. Don't be satisfied with memorizing steps – learn *why* those steps work. Each one should make logical sense and have real-world meaning to you.
- Sketch a diagram to help visualize the problem. Sketch a graph showing how variables relate. When building a real system, always prototype it on paper and analyze its function *before* constructing it.
- Identify what it is you need to solve, identify all relevant data, identify all units of measurement, identify any general principles or formulae linking the given information to the solution, and then identify any "missing pieces" to a solution. Annotate all diagrams with this data.
- Perform "thought experiments" to explore the effects of different conditions for theoretical problems. When troubleshooting, perform *diagnostic tests* rather than just visually inspect for faults.
- Simplify the problem and solve that simplified problem to identify strategies applicable to the original problem (e.g. change quantitative to qualitative, or visa-versa; substitute easier numerical values; eliminate confusing details; add details to eliminate unknowns; consider simple limiting cases; apply an analogy). Often you can add or remove components in a malfunctioning system to simplify it as well and better identify the nature and location of the problem.
- Work "backward" from a hypothetical solution to a new set of given conditions.

How to manage your time:

- Avoid procrastination. Work now and play later, or else you will create trouble for yourself. Schedule your work appropriate to the *place* you're in as well: e.g. don't waste lab time doing things that could be done anywhere else, when there is work to be done that requires the lab.
- Eliminate distractions. Kill your television and video games. Study in places where you can concentrate.
- Use your "in between" time productively. Don't leave campus for lunch. Arrive to school early. If you finish your assigned work early, begin working on the next assignment.

Above all, cultivate persistence. Persistent effort is necessary to master anything non-trivial. The keys to persistence are (1) having the desire to achieve that mastery, and (2) realizing challenges are normal and not an indication of something gone wrong. A common error is to equate *easy* with *effective*: students often believe learning should be easy if everything is done right. The truth is that mastery never comes easy!

file `question0`

Creative Commons License

This worksheet is licensed under the **Creative Commons Attribution 4.0 International Public License**. To view a copy of this license, visit `http://creativecommons.org/licenses/by/4.0/` or send a letter to Creative Commons, 171 Second Street, Suite 300, San Francisco, California 94105, USA. The terms and conditions of this license allow for free copying, distribution, and/or modification of all licensed works by the general public.

Simple explanation of Attribution License:

The licensor (Tony Kuphaldt) permits others to copy, distribute, display, and otherwise use this work. In return, licensees must give the original author(s) credit. For the full license text, please visit `http://creativecommons.org/licenses/by/4.0/` on the internet.

More detailed explanation of Attribution License:

Under the terms and conditions of the Creative Commons Attribution License, you may make freely use, make copies, and even modify these worksheets (and the individual "source" files comprising them) without having to ask me (the author and licensor) for permission. The one thing you must do is properly credit my original authorship. Basically, this protects my efforts against plagiarism without hindering the end-user as would normally be the case under full copyright protection. This gives educators a great deal of freedom in how they might adapt my learning materials to their unique needs, removing all financial and legal barriers which would normally hinder if not prevent creative use.

Nothing in the License prohibits the sale of original or adapted materials by others. You are free to copy what I have created, modify them if you please (or not), and then sell them at any price. Once again, the only catch is that you must give proper credit to myself as the original author and licensor. Given that these worksheets will be continually made available on the internet for free download, though, few people will pay for what you are selling unless you have somehow added value.

Nothing in the License prohibits the application of a more restrictive license (or no license at all) to derivative works. This means you can add your own content to that which I have made, and then exercise full copyright restriction over the new (derivative) work, choosing not to release your additions under the same free and open terms. An example of where you might wish to do this is if you are a teacher who desires to add a detailed "answer key" for your own benefit but *not* to make this answer key available to anyone else (e.g. students).

Note: the text on this page is not a license. It is simply a handy reference for understanding the Legal Code (the full license) - it is a human-readable expression of some of its key terms. Think of it as the user-friendly interface to the Legal Code beneath. This simple explanation itself has no legal value, and its contents do not appear in the actual license.

file `license`

Question 1

Read and outline the introduction to the "Chemistry" chapter in your *Lessons In Industrial Instrumentation* textbook.

The purpose of your outline is to foster close reading of the text, to facilitate quick referencing of specific points within the text, to record questions of your own, and to practice clear writing. Your outline must meet the following standards for full credit: *every major idea contained in the text represented in your outline, entirely in your own words (i.e. no copying of text), written in a legible and comprehensible manner, of sufficient quality that others would find it informative.* Incomplete, illegible, cryptic, and/or plagiarized outlines will not receive full credit. A suggestion is one sentence of your own per paragraph of source text. A well-written outline contains the following:

- Questions of your own and requests for clarification after reading the text
- Page numbers from the source text for quick reference during discussion
- Images copied from the text (or sketched by you) to illustrate concepts
- Acknowledgement of previously learned concepts
- Descriptions of problem-solving strategies applied by the author

file i04090

Question 2

Read and outline the "Atomic Theory and Chemical Symbols" section of the "Chemistry" chapter in your *Lessons In Industrial Instrumentation* textbook.

The purpose of your outline is to foster close reading of the text, to facilitate quick referencing of specific points within the text, to record questions of your own, and to practice clear writing. Your outline must meet the following standards for full credit: *every major idea contained in the text represented in your outline, entirely in your own words (i.e. no copying of text), written in a legible and comprehensible manner, of sufficient quality that others would find it informative.* Incomplete, illegible, cryptic, and/or plagiarized outlines will not receive full credit. A suggestion is one sentence of your own per paragraph of source text. A well-written outline contains the following:

- Questions of your own and requests for clarification after reading the text
- Page numbers from the source text for quick reference during discussion
- Images copied from the text (or sketched by you) to illustrate concepts
- Acknowledgement of previously learned concepts
- Descriptions of problem-solving strategies applied by the author

file i04091

Question 3

Bring the following materials to class to perform an experiment demonstrating the *electrolysis* (division of molecules into their atoms by electricity) of water. You may partner with one or two classmates to bring these materials, and perform the experiment together. You are also free to perform the experiment before class to get an advance-start on understanding the principles involved:

- Two paper clips
- Small drinking cup (to fill with water)
- At least two "alligator clip" jumper wires
- One or more 9-volt batteries

Bend the paperclips so they form two electrodes which will dip into water you put in the cup. Fill the cup with water, and connect the paper-clip electrodes to the 9 volt battery using the "alligator clip" jumper wires. You may use multiple 9-volt batteries connected in series for more voltage (to make the experiment more dramatic).

Closely observe the two energized electrodes. You should see small bubbles begin to form on their surfaces. Which electrode generates more bubbles (it should be approximately a 2:1 ratio)? Which electrode collects hydrogen atoms and which electrode collects negative atoms, based on your knowledge of water being H_2O and the process of electrolysis splitting water molecules into hydrogen and oxygen atoms?

Identify the transfer of energy in the process of electrolyzing water: is energy being released from the water molecules as they split into hydrogen and oxygen gas, or is energy being absorbed in the process? To phrase the question differently, is the energy state of a whole water molecule greater than or less than the energy states of the hydrogen and oxygen atoms separated? Explain your reasoning!

Finally, explain how we could re-combine the hydrogen and oxygen gases to become water once more. Would this process release energy or absorb energy? Explain your reasoning!

Suggestions for Socratic discussion

- Hydrogen gas is highly flammable, and so is a potential fuel for a combustion engine such as that found in an automobile. Does it make practical sense to produce hydrogen gas with an electrolysis process to generate fuel to power an automobile? Why or why not?
- Given the fact that hydrogen gas is flammable, and oxygen accelerates combustion of anything that is flammable, why isn't *water* a flammable substance? After all, it's got the fuel and the oxidant built right into each and every H_2O molecule!
- Is the hydrogen production rate for an electrolytic cell such as this a function of *voltage* or a function of *current*? Devise an experiment where you could determine which electrical measure best corresponds with hydrogen production rate.

file i04093

Question 4

When an internal combustion engine starts up cold, *water* may be seen coming out of the exhaust pipe, at least until the exhaust pipes become hot enough to vaporize the water so you can't see it anymore. Explain why water is a byproduct of any hydrocarbon fuel (e.g. gasoline or diesel) combustion, based on principles of chemistry.

When coal is partially combusted (i.e. burned in a low-oxygen environment), one of the byproduct gases is the flammable and toxic gas *carbon monoxide* (CO). This is also one of the major products of *biomass gasification*, where carbon-containing biomass fuels are heated in low-oxygen environments. Explain why an engine running on carbon monoxide gas as a fuel will *not* produce water as a byproduct of combustion.

Suggestions for Socratic discussion

- Is it possible to eliminate water from the exhaust gases of a car's engine operating on gasoline?
- Identify how we may identify fuels producing water vapor when burned, strictly by examining their chemical formulae.
- Identify how we may identify fuels which inherently produce no water vapor when burned, strictly by examining their chemical formulae.

file i03001

Question 5

A common concern in industrial maintenance work is *confined spaces*. Research the definition of a "confined space" and explain the potential hazards of working in confined spaces, particularly from the perspective of chemistry.

Next, visit the website of a company selling *personal safety gas monitors* used by workers in confined spaces and other industrial sites where certain toxic gases may be present. Identify some of the common chemical compounds measured by these portable instruments, and also the relative costs of the sensors for each compound.

file i00580

Question 6

Read the "Carbon dioxide" entry in the *NIOSH Pocket Guide To Chemical Hazards* (DHHS publication number 2005-149) and answer the following questions:

Write the chemical formula for carbon dioxide gas, and identify its constituent elements.

Determine whether or not carbon dioxide is flammable.

Determine whether carbon dioxide gas is *lighter* than air or *denser* than air, based on the relative density (RGasD) figure provided in the NIOSH guide.

Identify some of the symptoms of excessive carbon dioxide exposure, and the "target organs" of the body it affects.

Identify the type(s) of respirator equipment necessary for protection against high carbon dioxide concentrations.

Suggestions for Socratic discussion

- Identify what "LEL" and "UEL" refer to, and how these parameters are useful for identifying a compound's flammability.
- Sketch a *displayed formula* for carbon dioxide.
- Explain the specific hazards carbon dioxide might pose to people working in a *confined space* where ventilation is limited.
- Identify common sources of carbon dioxide gas in the home or workplace.
- Describe a general principle for determining proper respirator equipment: specifically whether *filtration* is sufficient or *supplied air* is necessary.

file i04095

Question 7

Read the "Carbon monoxide" entry in the *NIOSH Pocket Guide To Chemical Hazards* (DHHS publication number 2005-149) and answer the following questions:

Write the chemical formula for carbon monoxide gas, and identify its constituent elements.

Determine whether or not carbon monoxide is flammable.

Identify the relative density (RGasD) of carbon monoxide, then determine whether this is *lighter* than air or *heavier* than air.

Identify some of the symptoms of excessive carbon monoxide exposure, and the "target organs" of the body it affects.

Identify the type(s) of respirator equipment necessary for protection against high carbon monoxide concentrations.

Identify how similar carbon *monoxide* is to carbon *dioxide* in its physical properties and effects on the human body.

Suggestions for Socratic discussion

- Identify what "LEL" and "UEL" refer to, and how these parameters are useful for identifying a compound's flammability.
- Sketch a *displayed formula* for carbon monoxide.
- Carbon monoxide molecules are similar to carbon dioxide molecules in their composition, but have very different chemical and physical properties. Identify one property in which carbon monoxide differs substantially from carbon dioxide, and try to explain why this is based on the differences in atoms contained within the two molecules.
- Identify some of the specific hazards carbon monoxide might pose to people working in a *confined space* where ventilation is limited.
- Identify common sources of carbon monoxide gas in the home or workplace.
- When carbon monoxide gas combusts (burns) with oxygen, what type of molecule is produced as a result of that combustion?
- Describe a general principle for determining proper respirator equipment: specifically whether *filtration* is sufficient or *supplied air* is necessary.

file i04096

Question 8

Read the "Hydrogen sulfide" entry in the *NIOSH Pocket Guide To Chemical Hazards* (DHHS publication number 2005-149) and answer the following questions:

Write the chemical formula for hydrogen sulfide gas, and identify its constituent elements.

Hydrogen sulfide is a byproduct of petroleum oil refining, and also of anaerobic bacterial decomposition of organic matter (e.g. municipal wastewater and wood pulp production). Identify the NIOSH recommended exposure limit (REL) and the OSHA Permissible Exposure Limit (PEL) values for this gas.

Determine whether hydrogen sulfide gas is *lighter* than air or *denser* than air, based on the relative density (RGasD) figure provided in the NIOSH guide.

Identify the type(s) of respirator equipment necessary for protection against high hydrogen sulfide concentrations.

Suggestions for Socratic discussion

- Identify what "LEL" and "UEL" refer to, and how these parameters are useful for identifying a compound's flammability.
- Sketch a *displayed formula* for hydrogen sulfide.
- Explain the specific hazards hydrogen sulfide might pose to people working in a *confined space* where ventilation is limited.
- Identify common sources of hydrogen sulfide gas in the home or workplace.
- When hydrogen sulfide gas combusts (burns) with oxygen, what types of molecules are produced as a result of that combustion?
- Describe a general principle for determining proper respirator equipment: specifically whether *filtration* is sufficient or *supplied air* is necessary.
- A common unit of measurement for airborne chemical concentration of substances such as hydrogen sulfide is "parts per million" or *ppm*. Explain in your own words what "ppm" means.

file i04094

Question 9

An important type of document used in industry is *Safety Data Sheet* or *SDS*. Various SDS databases are available on the internet, although many of them are not free. Locate and list some of the URL's for SDS databases.

Next, identify the type of information provided by a typical SDS, and how this information compares with that found in the *NIOSH Pocket Guide to Chemical Hazards*.

file i00581

Question 10

Classify the following substances as *particle*, *atom*, *element*, *molecule*, *compound*, and/or *mixture*. Note that some of these substances might be properly described by more than one classification:

- One gram of perfectly pure water
- A proton
- Oxygen
- Carbon dioxide (CO_2)
- A quark
- Gasoline
- Air
- Plutonium

Suggestions for Socratic discussion

- Why do we care about these labels? What practical importance is there, for example, in knowing whether carbon dioxide is an element or a compound?

  file i00551

Question 11

The three "elementary" constituent particles of atoms are called *protons*, *neutrons*, and *electrons*. Classify these three particle types according to their locations within an atom, their electrical charge, and their relative masses.

Furthermore, describe the effects that the number of protons, neutrons, and electrons have on the characteristics of an atom.

file i00552

Question 12

How many electrons, protons, and neutrons does a single atom of Carbon-12 (^{12}C) contain? (Assume an electrically balanced atom.)

How many electrons, protons, and neutrons does the average atom of gold (Au) contain? (Assume an electrically balanced atom.)

file i00553

Question 13

Hundreds of years ago, people known by the title of *alchemists* attempted to convert one type of element into another, most notably *lead* (Pb) into *gold* (Au). Their efforts failed miserably. Explain why!

What, specifically, *would* be necessary to convert an atom of lead into an atom of gold?

file i00554

Question 14

What is the difference between these two notations: H_2 and ^2H?

file i00555

Question 15

In 1808, an English schoolteacher named John Dalton published several postulates regarding substances, representing the state-of-the-art of atomic theory at that time:

- An element is composed of extremely small indivisible particles called atoms.
- All atoms of a given element have identical properties, which differ from those of other elements.
- Atoms cannot be created, destroyed, or transformed into atoms of another element.
- Compounds are formed when atoms of different elements combine with each other in small whole-number ratios.
- The relative numbers and kinds of atoms are constant in a given compound.

Determine whether or not these postulates are still in agreement with modern atomic theory, and state the nature of any deviations you discern.

file i00556

Question 16

Define the following chemical terms: *solution*, *solute*, and *solvent*.

file i00557

Question 17

Suppose you see this label on a chemical storage container:

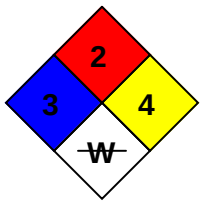

This is a standardized label (National Fire Protection Association – NFPA) identifying certain hazards of the chemical stored in the container. Identify what all the markings on this label mean.

file i00585

Question 18

Suppose you see this label on a chemical storage container:

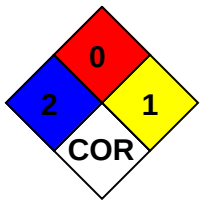

This is a standardized label (National Fire Protection Association – NFPA) identifying certain hazards of the chemical stored in the container. Identify what all the markings on this label mean.

file i00589

Question 19

Using an SDS reference, determine the flash point of pure (200 proof) ethyl alcohol (ethanol).

file i00582

Question 20

Question 21

Read and outline the "Periodic Table of the Elements" section of the "Chemistry" chapter in your *Lessons In Industrial Instrumentation* textbook.

The purpose of your outline is to foster close reading of the text, to facilitate quick referencing of specific points within the text, to record questions of your own, and to practice clear writing. Your outline must meet the following standards for full credit: *every major idea contained in the text represented in your outline, entirely in your own words (i.e. no copying of text), written in a legible and comprehensible manner, of sufficient quality that others would find it informative.* Incomplete, illegible, cryptic, and/or plagiarized outlines will not receive full credit. A suggestion is one sentence of your own per paragraph of source text. A well-written outline contains the following:

- Questions of your own and requests for clarification after reading the text
- Page numbers from the source text for quick reference during discussion
- Images copied from the text (or sketched by you) to illustrate concepts
- Acknowledgement of previously learned concepts
- Descriptions of problem-solving strategies applied by the author

file i04097

Question 22

One of the elements created in the detonation of a nuclear weapon is strontium-90 (^{90}Sr), a highly radioactive substance. Another radioactive substance – formerly used as an energy source for illuminated watch dials – is radium-226 (^{226}Ra). Both of these elements are quite dangerous because they tend to collect in the *bones* of people and animals unfortunate enough to ingest them.

Examine the Periodic Table of the Elements to find both strontium and radium, then determine why these two elements tend to collect in the bones of people and animals.

file i04104

Question 23

Silicon is the most common element used in the manufacture of semiconductor electronic devices, due to its *valence* and its tendency to form tetrahedral crystals. Examine the Periodic Table of the Elements to identify other elements that might similarly serve as substrate materials for electronic semiconductors.

Suggestions for Socratic discussion

- *Germanium* used to be used extensively in the early (1950's) electronics industry, but was displaced by silicon as the element of choice because silicon has better high-temperature characteristics. In fact, this trend of operating temperature versus placement in the periodic table holds true for all the semiconductor-capable elements. From this trend, qualitatively determine the operating temperature ranges for all the semiconductor-capable elements.

file i04105

Question 24

Read and outline the "Electronic Structure" section of the "Chemistry" chapter in your *Lessons In Industrial Instrumentation* textbook.

The purpose of your outline is to foster close reading of the text, to facilitate quick referencing of specific points within the text, to record questions of your own, and to practice clear writing. Your outline must meet the following standards for full credit: *every major idea contained in the text represented in your outline, entirely in your own words (i.e. no copying of text), written in a legible and comprehensible manner, of sufficient quality that others would find it informative.* Incomplete, illegible, cryptic, and/or plagiarized outlines will not receive full credit. A suggestion is one sentence of your own per paragraph of source text. A well-written outline contains the following:

- Questions of your own and requests for clarification after reading the text
- Page numbers from the source text for quick reference during discussion
- Images copied from the text (or sketched by you) to illustrate concepts
- Acknowledgement of previously learned concepts
- Descriptions of problem-solving strategies applied by the author

file i04099

Question 25

An interesting way to denote the spectroscopic electron shell structure of elements is shown here:

Element	Electron configuration
Hydrogen	$1s^1$
Helium	$1s^2$
Lithium	$[He]2s^1$
Beryllium	$[He]2s^2$
Boron	$[He]2s^22p^1$
Carbon	$[He]2s^22p^2$
Nitrogen	$[He]2s^22p^3$
Oxygen	$[He]2s^22p^4$
Fluorine	$[He]2s^22p^5$
Neon	$[He]2s^22p^6$
Sodium	$[Ne]3s^1$
Magnesium	$[Ne]3s^2$
Aluminum	$[Ne]3s^23p^1$
Silicon	$[Ne]3s^23p^2$
Phosphorus	$[Ne]3s^23p^3$
Sulfur	$[Ne]3s^23p^4$
Chlorine	$[Ne]3s^23p^5$
Argon	$[Ne]3s^23p^6$
Potassium	$[Ar]4s^1$

Explain how this notation condenses what is otherwise a very lengthy and unwieldy format (showing *all* shells in each atom), without omitting any crucial information.

Suggestions for Socratic discussion

- The bracketed element name is sometimes referred to as an "electron core" in spectroscopic notation. Explain why this label makes sense.
- Examine this table of electron notations, and identify the "periods" (intervals) comprising each row in a periodic table.
- Identify elements in this table which are the easiest to positively ionize (i.e. remove one electron from).
- Identify elements in this table which are the easiest to negatively ionize (i.e. add one electron to).

file i00562

Question 26

Read and outline the "Spectroscopy" section of the "Chemistry" chapter in your *Lessons In Industrial Instrumentation* textbook.

The purpose of your outline is to foster close reading of the text, to facilitate quick referencing of specific points within the text, to record questions of your own, and to practice clear writing. Your outline must meet the following standards for full credit: *every major idea contained in the text represented in your outline, entirely in your own words (i.e. no copying of text), written in a legible and comprehensible manner, of sufficient quality that others would find it informative.* Incomplete, illegible, cryptic, and/or plagiarized outlines will not receive full credit. A suggestion is one sentence of your own per paragraph of source text. A well-written outline contains the following:

- Questions of your own and requests for clarification after reading the text
- Page numbers from the source text for quick reference during discussion
- Images copied from the text (or sketched by you) to illustrate concepts
- Acknowledgement of previously learned concepts
- Descriptions of problem-solving strategies applied by the author

file i04101

Question 27

Bring a Compact Disk (CD) or a Digital Video Disk (DVD) to class and use the reflective surface as a *reflection grating* to display the spectrum of visible light sources (point-sources such as small light bulbs work best!). You may have to experiment with the angles you hold the disk in order to easily see different spectra, but with practice you should be able to quickly locate the spectrum from any point-source of light. *Safety note: DO NOT ATTEMPT TO VIEW SUNLIGHT OR LASER LIGHT IN THIS WAY, AS YOU MAY EASILY HURT YOUR EYES!*

View the spectrum from several different point-light sources and note how those spectra are similar and how they are different from each other:

- Incandescent light bulb
- Compact fluorescent light bulb
- "White" LED (light emitting diode)
- Colored LED (light emitting diode)
- Neon lamp

Identify which of these spectra appears to be the most "continuous" through all the colors, and which appear the most "broken." Explain what each spectrum reveals about the chemical nature of each light source.

Suggestions for Socratic discussion

- Astronomers use this basic principle (not actually using *CDs*, of course!) to analyze the chemical composition of stars. Explain how this would work – what exactly would an astronomer look for in the spectrum of light received from a star?

  file i04102

Question 28

One of the concerns surrounding depletion of Earth's ozone layer in the upper atmosphere is its effect on ultraviolet light from the sun. Ozone is a triple-oxygen molecule (O_3) with some unique chemical characteristics different from regular molecular oxygen (O_2). The more the ozone layer depletes, the more ultraviolet light reaches us on the ground.

Based on your knowledge of spectroscopy, would you classify this relationship between the ozone layer and "UV" light as an example of optical *emission* or optical *absorption*?

Suggestions for Socratic discussion

- Explain why ozone molecules (O_3) exhibit this interaction with ultraviolet light, but regular oxygen molecules (O_2) do not.
- Describe how an ozone-sensing instrument might be constructed based on this principle of UV light absorption. Identify ways in which such an instrument might be "fooled" into giving false readings of ozone gas where none is present.
- Suppose a glass tube containing ozone gas were electrically stimulated by the application of high voltage between two electrodes within that tube. What sort of light might be emitted by that tube when the electricity is applied?

file i04103

Question 29

Determine the number of protons and neutrons in the nucleus of one atom for each of the following elements:

- ^{195}Pt (Platinum-195) – Protons = ____ ; Neutrons = ____
- ^{75}As (Arsenic-75) – Protons = ____ ; Neutrons = ____
- ^{235}U (Uranium-235) – Protons = ____ ; Neutrons = ____
- ^{40}Ca (Calcium-40) – Protons = ____ ; Neutrons = ____

Suggestions for Socratic discussion

- Which of these particle quantities *defines* the element?
- What would be required to *transmute* one element into another, say lead into gold?
- Breaking and creating new chemical bonds involves far lower energy levels than transmutating one element into another. Explain what this fact tells us about the binding force of electrons to the nucleus of an atom versus the binding force between protons and neutrons within the nucleus of an atom.
- Explain what an *isotope* is, and how isotope identities relate to these particle numbers in an atomic nucleus.

file i04098

Question 30

Explain what the following notation means: $1s^2 2s^2 2p^6 3s^2 3p^1$

Define the word "orbital" as it applies to atomic electrons.
file i04100

Question 31

What does this table show? What is its purpose?

Periodic Table of the Elements

Symbol → K; Name → Potassium; Atomic number → 19; Atomic mass (averaged according to occurence on earth) → 39.0983; Electron configuration → $4s^1$

Metalloids *Nonmetals* *Metals*

H 1 Hydrogen 1.00794 $1s^1$																	He 2 Helium 4.00260 $1s^2$
Li 3 Lithium 6.941 $2s^1$	Be 4 Beryllium 9.012182 $2s^2$											B 5 Boron 10.81 $2p^1$	C 6 Carbon 12.011 $2p^2$	N 7 Nitrogen 14.0067 $2p^3$	O 8 Oxygen 15.9994 $2p^4$	F 9 Fluorine 18.9984 $2p^5$	Ne 10 Neon 20.179 $2p^6$
Na 11 Sodium 22.989768 $3s^1$	Mg 12 Magnesium 24.3050 $3s^2$											Al 13 Aluminum 26.9815 $3p^1$	Si 14 Silicon 28.0855 $3p^2$	P 15 Phosphorus 30.9738 $3p^3$	S 16 Sulfur 32.06 $3p^4$	Cl 17 Chlorine 35.453 $3p^5$	Ar 18 Argon 39.948 $3p^6$
K 19 Potassium 39.0983 $4s^1$	Ca 20 Calcium 40.078 $4s^2$	Sc 21 Scandium 44.955910 $3d^1 4s^2$	Ti 22 Titanium 47.88 $3d^2 4s^2$	V 23 Vanadium 50.9415 $3d^3 4s^2$	Cr 24 Chromium 51.9961 $3d^5 4s^1$	Mn 25 Manganese 54.93805 $3d^5 4s^2$	Fe 26 Iron 55.847 $3d^6 4s^2$	Co 27 Cobalt 58.93320 $3d^7 4s^2$	Ni 28 Nickel 58.69 $3d^8 4s^2$	Cu 29 Copper 63.546 $3d^{10} 4s^1$	Zn 30 Zinc 65.39 $3d^{10} 4s^2$	Ga 31 Gallium 69.723 $4p^1$	Ge 32 Germanium 72.61 $4p^2$	As 33 Arsenic 74.92159 $4p^3$	Se 34 Selenium 78.96 $4p^4$	Br 35 Bromine 79.904 $4p^5$	Kr 36 Krypton 83.80 $4p^6$
Rb 37 Rubidium 85.4678 $5s^1$	Sr 38 Strontium 87.62 $5s^2$	Y 39 Yttrium 88.90585 $4d^1 5s^2$	Zr 40 Zirconium 91.224 $4d^2 5s^2$	Nb 41 Niobium 92.90638 $4d^4 5s^1$	Mo 42 Molybdenum 95.94 $4d^5 5s^1$	Tc 43 Technetium (98) $4d^5 5s^2$	Ru 44 Ruthenium 101.07 $4d^7 5s^1$	Rh 45 Rhodium 102.90550 $4d^8 5s^1$	Pd 46 Palladium 106.42 $4d^{10} 5s^0$	Ag 47 Silver 107.8682 $4d^{10} 5s^1$	Cd 48 Cadmium 112.411 $4d^{10} 5s^2$	In 49 Indium 114.82 $5p^1$	Sn 50 Tin 118.710 $5p^2$	Sb 51 Antimony 121.75 $5p^3$	Te 52 Tellurium 127.60 $5p^4$	I 53 Iodine 126.905 $5p^5$	Xe 54 Xenon 131.30 $5p^6$
Cs 55 Cesium 132.90543 $6s^1$	Ba 56 Barium 137.327 $6s^2$	*57 - 71 Lanthanide series*	Hf 72 Hafnium 178.49 $5d^2 6s^2$	Ta 73 Tantalum 180.9479 $5d^3 6s^2$	W 74 Tungsten 183.85 $5d^4 6s^2$	Re 75 Rhenium 186.207 $5d^5 6s^2$	Os 76 Osmium 190.2 $5d^6 6s^2$	Ir 77 Iridium 192.22 $5d^7 6s^2$	Pt 78 Platinum 195.08 $5d^9 6s^1$	Au 79 Gold 196.96654 $5d^{10} 6s^1$	Hg 80 Mercury 200.59 $5d^{10} 6s^2$	Tl 81 Thallium 204.3833 $6p^1$	Pb 82 Lead 207.2 $6p^2$	Bi 83 Bismuth 208.98037 $6p^3$	Po 84 Polonium (209) $6p^4$	At 85 Astatine (210) $6p^5$	Rn 86 Radon (222) $6p^6$
Fr 87 Francium (223) $7s^1$	Ra 88 Radium (226) $7s^2$	*89 - 103 Actinide series*	Unq 104 Unnilquadium (261) $6d^2 7s^2$	Unp 105 Unnilpentium (262) $6d^3 7s^2$	Unh 106 Unnilhexium (263) $6d^4 7s^2$	Uns 107 Unnilseptium (262)	108	109									

Lanthanide series

La 57 Lanthanum 138.9055 $5d^1 6s^2$	Ce 58 Cerium 140.115 $4f^1 5d^1 6s^2$	Pr 59 Praseodymium 140.90765 $4f^3 6s^2$	Nd 60 Neodymium 144.24 $4f^4 6s^2$	Pm 61 Promethium (145) $4f^5 6s^2$	Sm 62 Samarium 150.36 $4f^6 6s^2$	Eu 63 Europium 151.965 $4f^7 6s^2$	Gd 64 Gadolinium 157.25 $4f^7 5d^1 6s^2$	Tb 65 Terbium 158.92534 $4f^9 6s^2$	Dy 66 Dysprosium 162.50 $4f^{10} 6s^2$	Ho 67 Holmium 164.93032 $4f^{11} 6s^2$	Er 68 Erbium 167.26 $4f^{12} 6s^2$	Tm 69 Thulium 168.93421 $4f^{13} 6s^2$	Yb 70 Ytterbium 173.04 $4f^{14} 6s^2$	Lu 71 Lutetium 174.967 $4f^{14} 5d^1 6s^2$

Actinide series

Ac 89 Actinium (227) $6d^1 7s^2$	Th 90 Thorium 232.0381 $6d^2 7s^2$	Pa 91 Protactinium 231.03588 $5f^2 6d^1 7s^2$	U 92 Uranium 238.0289 $5f^3 6d^1 7s^2$	Np 93 Neptunium (237) $5f^4 6d^1 7s^2$	Pu 94 Plutonium (244) $5f^6 6d^0 7s^2$	Am 95 Americium (243) $5f^7 6d^0 7s^2$	Cm 96 Curium (247) $5f^7 6d^1 7s^2$	Bk 97 Berkelium (247) $5f^9 6d^0 7s^2$	Cf 98 Californium (251) $5f^{10} 6d^0 7s^2$	Es 99 Einsteinium (252) $5f^{11} 6d^0 7s^2$	Fm 100 Fermium (257) $5f^{12} 6d^0 7s^2$	Md 101 Mendelevium (258) $5f^{13} 6d^0 7s^2$	No 102 Nobelium (259) $6d^0 7s^2$	Lr 103 Lawrencium (260) $6d^1 7s^2$

file 100550

Question 32

Physicists and chemists alike often refer to atomic structures called electron *shells*. What is an electron shell within an atom, and why is it an important concept in chemistry?

file i00560

Question 33

When an electric current is passed through a tube containing pure hydrogen gas, a characteristic red glow is emitted. If the tube is emptied and then filled with a different gaseous element (such as neon), a different color will be emitted, also characteristic to that element.

The fact that each element emits a color of light characteristic to that element tells us something about the electrons in the atoms of those elements. What does it indicate?

Hint: this has something to do with electrons inhabiting discrete "shells" around an atom's nucleus, in contrast to the oversimplified image of electrons whirling around nuclei like tiny satellites.

file i03003

Question 34

What binds different atoms together to form molecules? What particles or forces are involved to hold the constituent atoms within molecules together?

file i00576

Question 35

Carbon dioxide gas (CO_2) is a strong absorber of certain infra-red light frequencies. Knowing this, I once attempted to build my own CO_2 gas analyzer using the following apparatus:

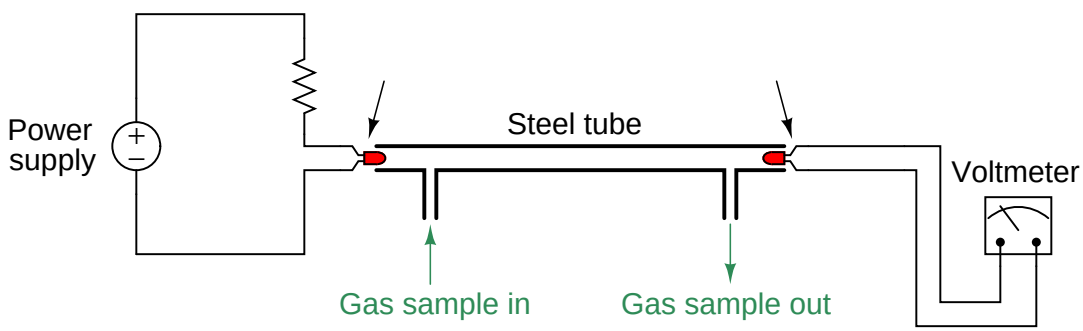

Testing this apparatus on three known sources of CO_2, I measured very unexpected results:

Gas source	**CO_2 content**	**Photodiode output voltage**
Ambient air	Weak	Moderate
Exhaled air (breath)	Moderate	Weak
Pure CO_2	Strong	Strong

My ambient air source was from a compressed air line in a shop. My pure CO_2 source was from a high-pressure "bottle" of carbon dioxide gas used for MIG welding.

Identify how the photodiode's output voltage *should* have responded if this apparatus were indeed sensing CO_2 content. Next, hypothesize what this apparatus *was* detecting, if not CO_2.

file i00563

Question 36

What do you notice about the electron configurations for the elements in each of the vertical columns of the periodic table? What does this tell you about the nature of those elements?

file i00564

Question 37

After years of trouble-free operation, several of the stack gas analyzers in this incinerator system begin to register zero or near-zero concentration levels. The affected analyzers are those measuring hydrogen sulfide, acetylene, ammonia, nitric acid, and methane:

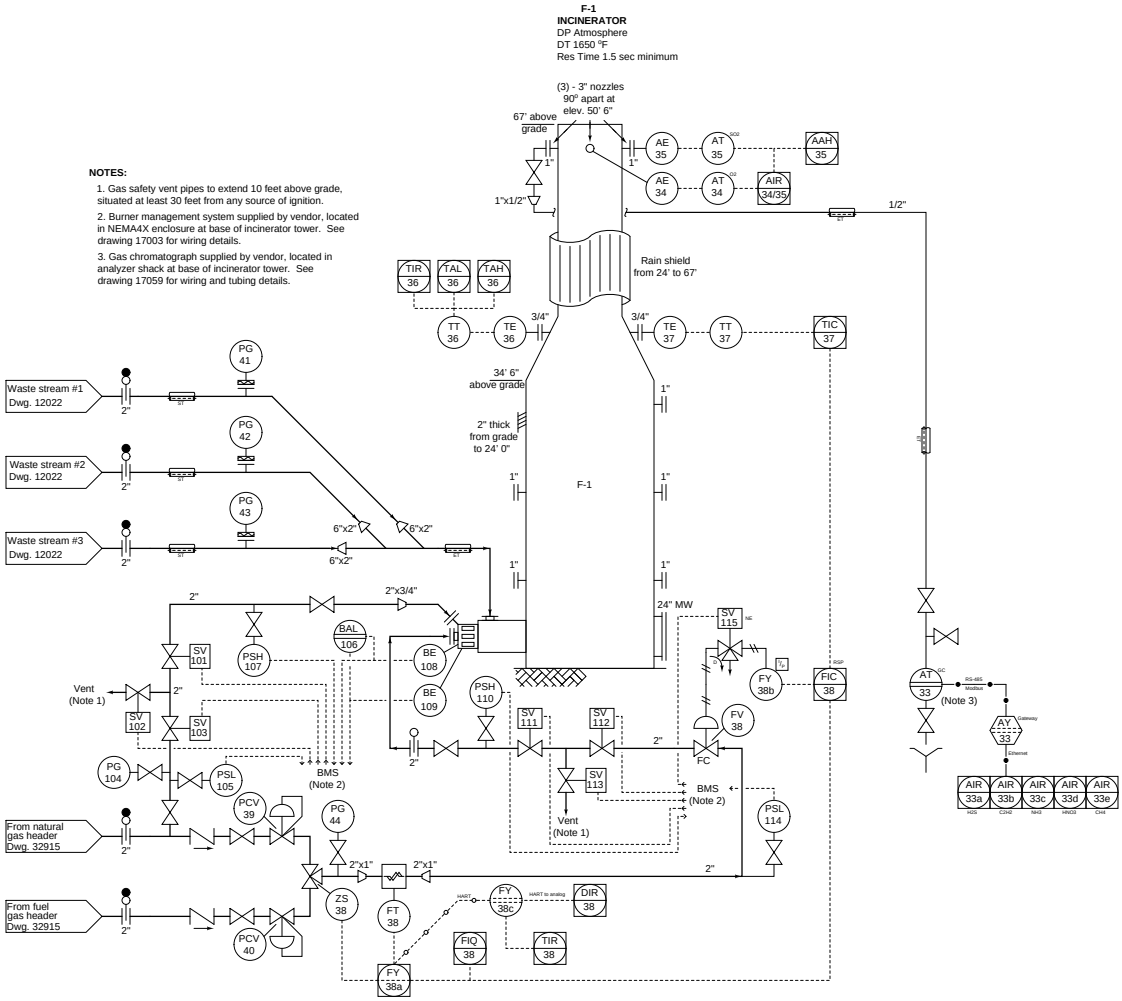

Identify likely faults which could account for the analyzer problems in this system, and also describe a good diagnostic test you could perform to help isolate the fault(s).

Suggestions for Socratic discussion

- A useful assumption to make while diagnosing faults is that a single fault is more likely than multiple, coincidental faults. Given this assumption (based on a philosophical proverb known as *Occam's Razor*), identify single points of failure that could account for all the bad analyzer indications described in the problem.

  file i03363

Question 38

The following process converts nitric acid (HNO_3) and ammonia gas (NH_3) into ammonium nitrate (NH_4NO_3) for use as an ingredient in synthetic fertilizer:

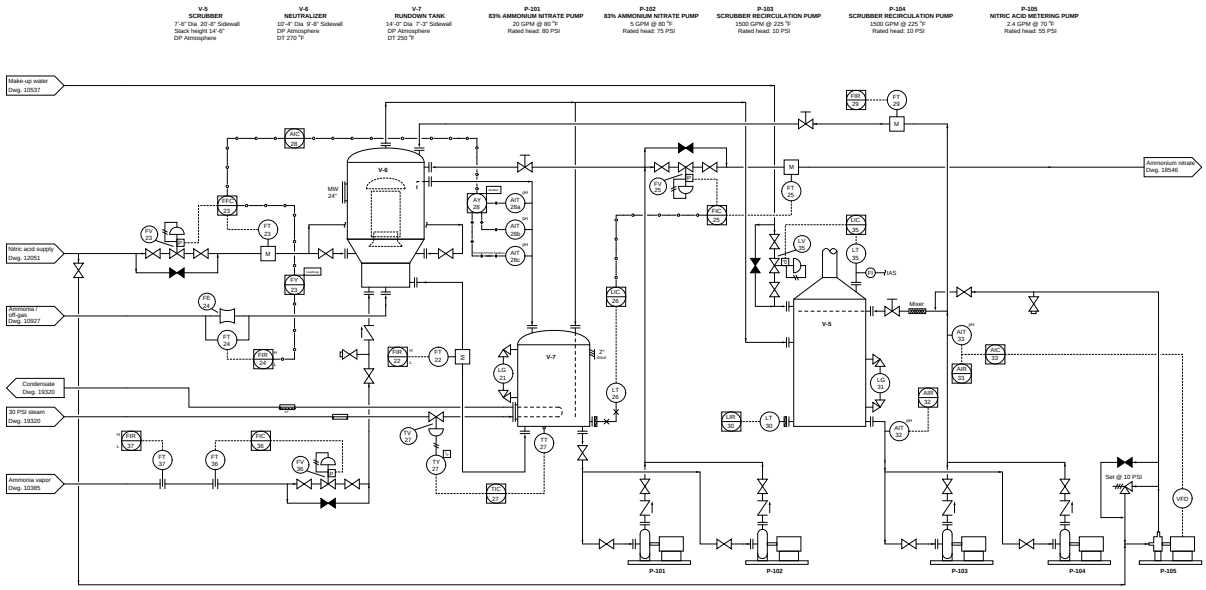

Examine the diagram and answer the following questions about this process:

Examine the reaction formula happening inside the "neutralizer" vessel V-6 (shown below) and identify whether this reaction is *endothermic* or *exothermic*:

$$HNO_3 + NH_3 \rightarrow NH_4NO_3$$

Explain why a *ratio control system* is used to balance the flows of ammonia vapor and nitric acid into the neutralizer vessel.

file i03505

Question 39

An interesting chemical analyzer mechanism used by German chemical manufacturers near the time of World War II used a four-element Wheatstone bridge circuit where each element was a platinum wire heated by the bridge's excitation current, changing temperature as a function of convective gas cooling. The greater the cooling effect of the gas, the lower the wire temperature and therefore the less electrical resistance each wire sensor exhibited:

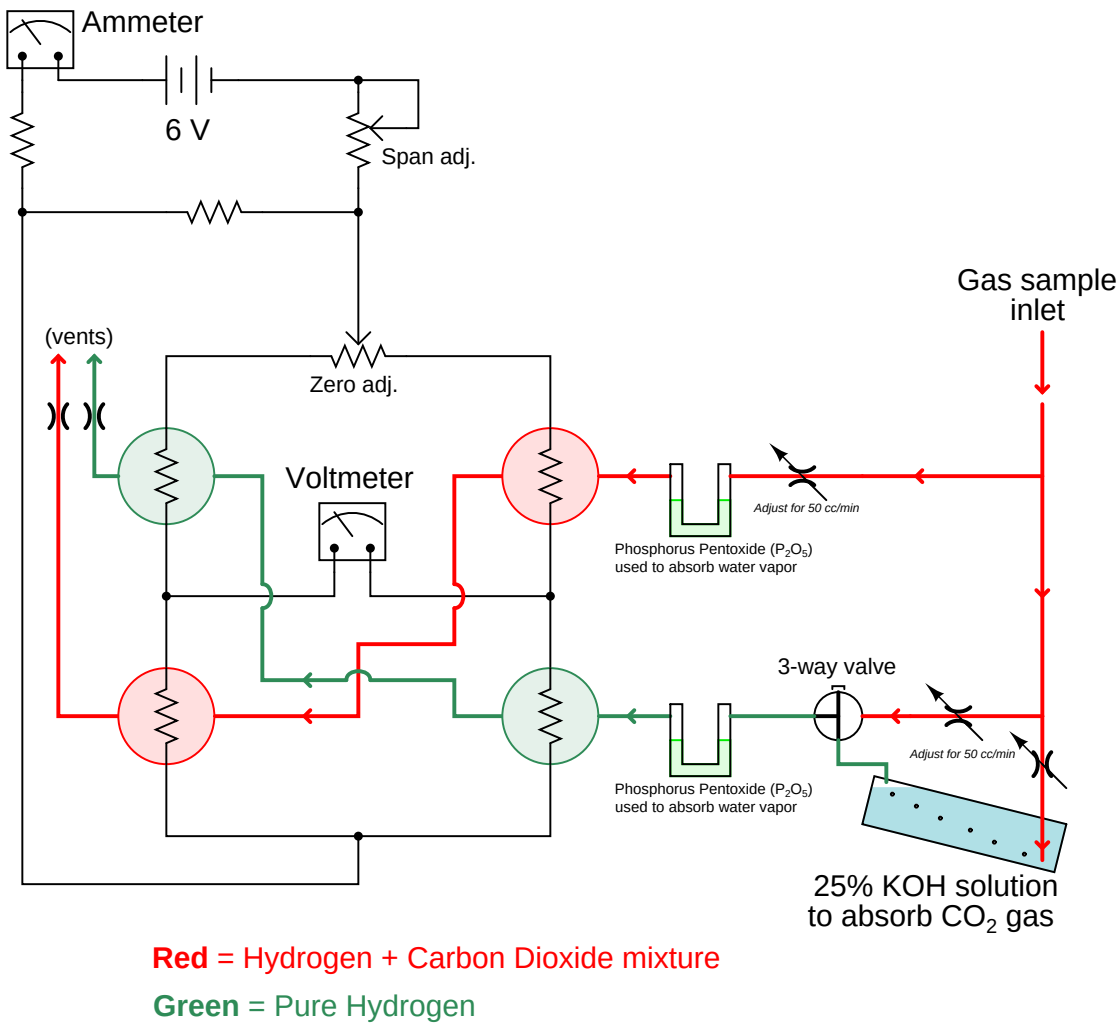

Manually-adjusted restrictor valves were set by instrument technicians to maintain equal flow rates of each gas stream (as measured at the vents).

Given that hydrogen gas has a much greater specific heat than carbon dioxide gas, identify the polarity of voltage signal across the voltmeter as the carbon dioxide concentration becomes stronger.

Suggestions for Socratic discussion

- A good problem-solving technique to apply in cases where we need to determine the direction of a change is to consider *limiting cases*. Instead of asking ourselves what would happen if the CO_2 concentration changed slightly, we ask ourselves what would happen if the CO_2 concentration changed *dramatically*. Explain how this problem-solving technique applies to this particular system.

- What assumption(s), if any, must we make about the sample gas in order to trust the readings given by this analyzer?
- Identify the purpose of the three-way valve shown in the diagram.
- Which way should the "span adjustment" potentiometer wiper be moved to make this instrument more sensitive (i.e. generate a greater voltage at the voltmeter for any given concentration of CO_2 in the sample gas).

file i00979

Question 40

Question 41

Read and outline the "Molecular Quantities" section of the "Chemistry" chapter in your *Lessons In Industrial Instrumentation* textbook.

The purpose of your outline is to foster close reading of the text, to facilitate quick referencing of specific points within the text, to record questions of your own, and to practice clear writing. Your outline must meet the following standards for full credit: *every major idea contained in the text represented in your outline, entirely in your own words (i.e. no copying of text), written in a legible and comprehensible manner, of sufficient quality that others would find it informative.* Incomplete, illegible, cryptic, and/or plagiarized outlines will not receive full credit. A suggestion is one sentence of your own per paragraph of source text. A well-written outline contains the following:

- Questions of your own and requests for clarification after reading the text
- Page numbers from the source text for quick reference during discussion
- Images copied from the text (or sketched by you) to illustrate concepts
- Acknowledgement of previously learned concepts
- Descriptions of problem-solving strategies applied by the author

file i04111

Question 42

Calculate the mass of the following quantities of pure chemical compound. In each case, feel free to use atomic mass values rounded to the nearest whole number (from a Periodic Table) in your calculations:

- 35.2 moles of alumina Al_2O_3 at 25 ^oC
- 10.6 moles of nitroglycerine $C_3H_5N_3O_9$ at 77 ^oC
- 3.7 moles of phosgene $COCl_2$ at 145 ^oF
- 130 moles of tetraethyl pyrophosphate or "TEPP" $[(CH_3CH_2O)_2PO]_2O$ at -10 ^oF

Suggestions for Socratic discussion

- Demonstrate how to *estimate* numerical answers for this problem without using a calculator.
- Calculate the amount of heat required to warm 30 moles of water from 20 degrees Celsius to 25 degrees Celsius.
- Calculate the amount of heat required to warm 200 moles of hydrogen gas from 50 degrees Celsius to 70 degrees Celsius.

file i04113

Question 43

Calculate the molar quantity (n, in moles) for the following quantities of pure chemical substances. Feel free to use atomic mass values rounded to the nearest whole number (from a Periodic Table) in your calculations:

- 500 grams of pure iron at 10 ^{o}C and 1.2 atmospheres
- 1.1 kilograms of pure propane C_3H_8 at -30 ^{o}C and 3 atmospheres
- 250 kilograms of naphthalene $C_{10}H_8$ at 0 ^{o}C and 45 kPaA
- 71 grams of hexafluoroacetone $(CF_3)_2CO$ at 110 ^{o}F and 50 bar (gauge)

Suggestions for Socratic discussion

- What effects do temperature and pressure have on the mass of a sample?
- Demonstrate how to *estimate* numerical answers for this problem without using a calculator.
- Does the *phase* of the substance (i.e. gas, liquid, solid) matter in these calculations? Why or why not?

file i04118

Question 44

Read and outline the "Gas Laws" subsection of the "Fluid Mechanics" section of the "Physics" chapter in your *Lessons In Industrial Instrumentation* textbook.

The purpose of your outline is to foster close reading of the text, to facilitate quick referencing of specific points within the text, to record questions of your own, and to practice clear writing. Your outline must meet the following standards for full credit: *every major idea contained in the text represented in your outline, entirely in your own words (i.e. no copying of text), written in a legible and comprehensible manner, of sufficient quality that others would find it informative.* Incomplete, illegible, cryptic, and/or plagiarized outlines will not receive full credit. A suggestion is one sentence of your own per paragraph of source text. A well-written outline contains the following:

- Questions of your own and requests for clarification after reading the text
- Page numbers from the source text for quick reference during discussion
- Images copied from the text (or sketched by you) to illustrate concepts
- Acknowledgement of previously learned concepts
- Descriptions of problem-solving strategies applied by the author

file i04112

Question 45

Pure nitrogen (N_2) gas is often used as an *inerting* agent to displace air from the vapor space of tanks holding some chemically reactive liquid(s) such as flammable fuels. Nitrogen is quite un-reactive at ambient temperatures, and so a "blanket" of this gas will do an effective job isolating liquid substances from contact with air in a tank:

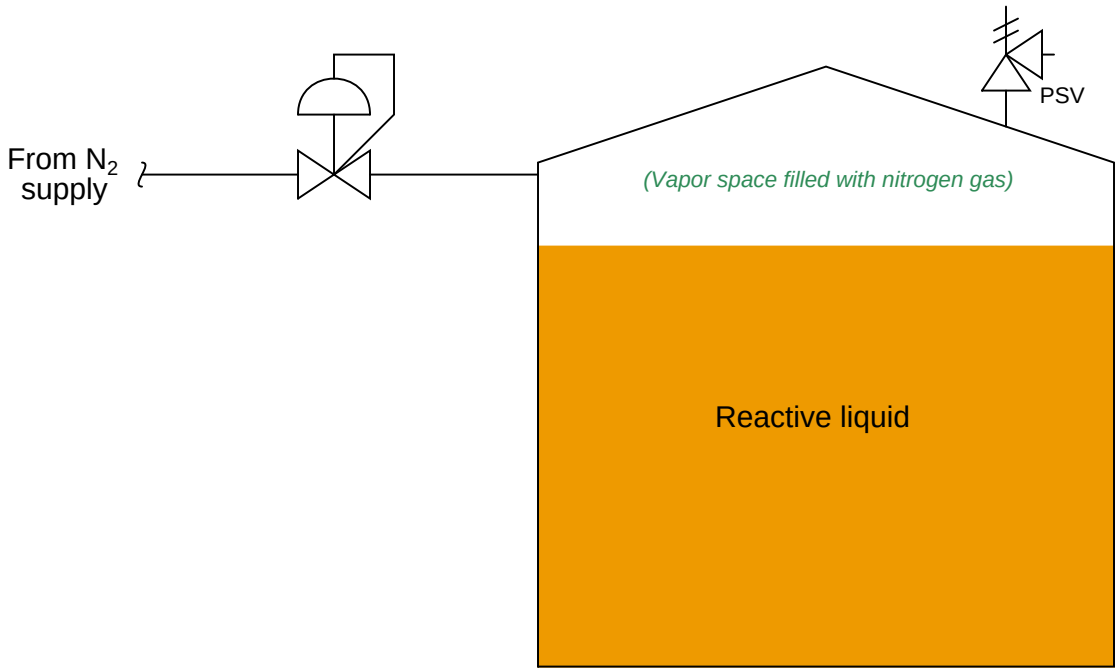

Suppose exactly 45 kilograms of liquid nitrogen are vaporized to form nitrogen gas at atmospheric pressure and a temperature of 20 ^{o}C for the purpose of "blanketing" a fuel storage tank made of mild steel. How much air volume will this much nitrogen displace, in units of liters and also cubic feet?

Suggestions for Socratic discussion

- Explain the purpose served by the pressure regulating valve on the nitrogen supply line to the tank.
- Explain the purpose of the special "PSV" valve located on the roof of the tank.
- Based on what you know about the N_2 molecule, explain why nitrogen gas is so un-reactive at low temperatures.
- Will more or less mass of nitrogen be required to "blanket" a fuel storage tank if the ambient temperature falls (assuming an unchanged liquid volume inside the tank)?
- Based on what you know of nitrogen's chemical properties, does it constitute a health or safety hazard? Why or why not?
- Suppose this blanketing system were functioning on a very cold winter day. Would this environmental change affect your calculation of displaced air volume? Explain why or why not.
- Could a nitrogen blanketing system such as this affect the measurement accuracy of a level transmitter installed in this tank? Explain why or why not.

file i04119

Question 46

Dilute chemical concentrations are often measured in the unit of *parts per million*, abbreviated *ppm*. For extremely dilute solutions, the unit *parts per billion* (ppb) is used. These are nothing more than ratios, much like *percentage*. In fact, the unit of "percent" may be thought of as nothing more than "parts per hundred" although it is never conventionally expressed as such.

In light of this definition for *ppm*, express the tolerance of a ±5% carbon-composition resistor in ppm instead of percent.

Also calculate the following volumetric and mass concentrations in units of ppm:

- 3.6 milliliters of methyl alcohol mixed into 10.5 liters of pure water
- 55 cubic inches of natural gas released into a room of air 10 feet by 15 feet by 8 feet
- 10 grams of hydrofluoric acid added to 560 kg of water
- 140 grams of H_2S gas released into open air

file i00587

Question 47

Research the *NIOSH Pocket Guide To Chemical Hazards* (DHHS publication number 2005-149) to answer the following questions:

What does the NIOSH designation *IDLH* refer to?

What does the NIOSH designation *REL* refer to?

What does the OSHA designation *PEL* refer to?

Suggestions for Socratic discussion

- Identify some of the criteria used to establish the REL and PEL values.
- Identify some common units of measurement for these exposure limits, citing a real example from the NIOSH pocket guide.
- Which seems the more conservative (safe) exposure limit, the NIOSH *REL* or the OSHA *PEL*?

file i04114

Question 48

High-temperature combustion causes some of the nitrogen molecules in the combustion air to join with oxygen molecules to form a gaseous pollutant called nitrogen dioxide (NO_2). In large fossil-fuel power plants, this pollutant is sometimes "scrubbed" from the exhaust gases by injecting a spray of pure ammonia (NH_3) into the exhaust stream. The resulting chemical reaction eliminates the pollutant by reducing it to water vapor and pure nitrogen gas:

$$6NO_2 + 8NH_3 \rightarrow 12H_2O + 7N_2$$

For every six molecules of nitrogen dioxide, it takes eight molecules of ammonia to reduce it to twelve molecules of water and seven molecules of nitrogen gas.

Calculate the molar quantity of ammonia required to reduce 1350 moles of nitrogen dioxide gas.

Also, calculate the mass of this nitrogen dioxide quantity and the mass of this ammonia quantity.

Suggestions for Socratic discussion

- Is there such a thing as a *Law of Molar Conservation* as there is for mass and energy conservation?
- What is so bad about nitrogen dioxide gas that we would try to scrub it from the exhaust? After all, what has NO_2 ever done to hurt *you?*
- Calculate a *mass ratio* of ammonia to nitrogen dioxide to make it easy for anyone to compute the required quantity (mass) of ammonia to neutralize any given quantity (mass) of nitrogen dioxide.

file i04116

Question 49

A control system is used to maintain the hydrogen/oxygen ratio at a perfect mix for a rocket engine. What technology would you recommend we use to measure oxygen and hydrogen flow rates? Explain your answer. Note: this system is a bit simplified from a real combustion fuel/oxidizer ratio control system. A real system would be equipped with a feature called *cross limiting*, which ensures a lean (not a rich) mixture as the firing signal increases or decreases.

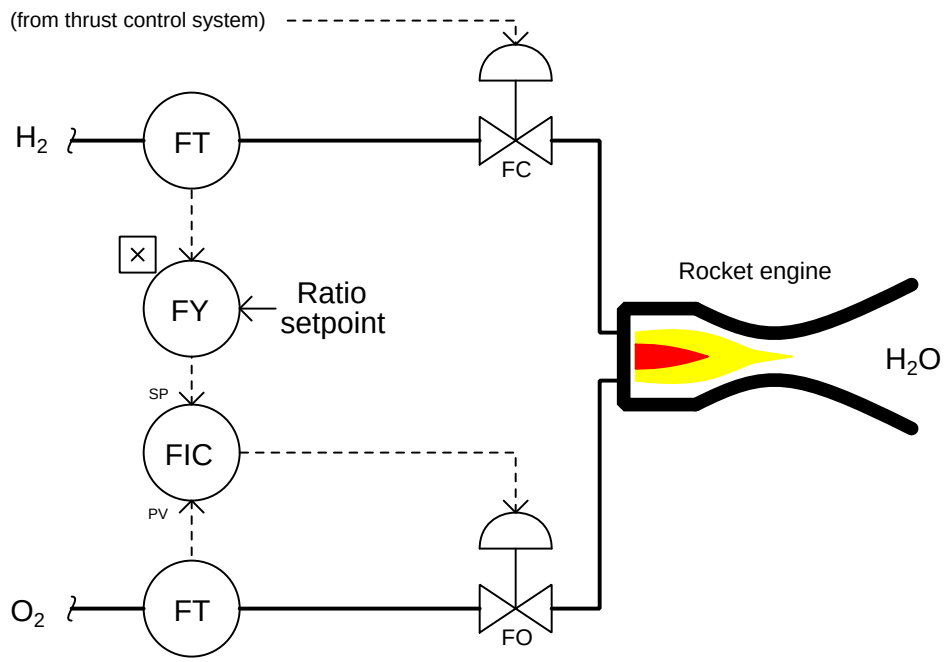

Also, determine the ideal hydrogen/oxygen mass ratio setpoint for this control system based on the knowledge we need two moles of hydrogen gas for every one mole of oxygen gas for complete combustion.

Suggestions for Socratic discussion

- Why is good ratio control important for a rocket engine? What bad consequences might result from even slight mis-adjustments of fuel/oxidizer ratio?
- Which is the greater mass flow rate into the rocket engine, hydrogen or oxygen?
- Which is the greater molar flow rate into the rocket engine, hydrogen or oxygen?
- Assuming the oxygen flowmeter has a calibrated range of 0 to 8 kilograms per second, and the hydrogen flowmeter has a calibrated range of 0 to 1 kilograms per second, what should the new ratio setpoint value be?
- Identify suitable flowmeter technologies for measuring the *molar* flow rates (i.e. moles per second) of hydrogen and oxygen to the engine, assuming both the hydrogen and oxygen are in gaseous form.
- Should the flow-indicating controller (FIC) be configured for *direct* or *reverse* action? Explain your reasoning.
- Suppose the hydrogen flowmeter in this example were to fail with a low ($< 0\%$) output signal. Identify the effects of this fault on the control system shown.
- Suppose the oxygen flowmeter in this example were to fail with a low ($< 0\%$) output signal. Identify the effects of this fault on the control system shown.

file i00571

Question 50

In chemistry, the unit of the *mole* is important when quantifying substances. What exactly is a mole?
file i00565

Question 51

Calculate the mass (in grams) for each of these substance quantities:

- 1 mole of pure ^{12}C
- 1 mole of carbon (naturally occurring)
- 1 mole of pure ^{56}Fe
- 5.5 moles of mercury (naturally occurring)
- 0.002 moles of helium (naturally occurring)

Hint: you will find the Periodic Table of the Elements extremely helpful here!
file i00566

Question 52

Calculate the mass (in grams) for each of these substance quantities (when calculating, round all atomic masses to the nearest hundredth):

- 1 mole of water: H_2O
- 1 mole of *heavy water* (deuterium oxide, or D_2O)
- 1 mole of sulfuric acid: H_2SO_4
- 14 moles of methane: CH_4
- 5 moles of ammonium carbonate: $(NH_4)_2CO_3$

Note: "deuterium" is an isotope of hydrogen, each atom containing one proton *and* one neutron in the nucleus.
file i00567

Question 53

When acid attacks metal, the result is typically a release of hydrogen gas and the production of a *salt*. If we immerse a piece of solid zinc metal (Zn) is into liquid sulfuric acid (H_2SO_4), we see this general tendency in the production of hydrogen gas (H_2) and a salt called zinc sulfate ($ZnSO_4$). The chemical equation describing this reaction is shown here:

$$Zn + H_2SO_4 \rightarrow ZnSO_4 + H_2$$

For every single atom of zinc, it takes one molecule of sulfuric acid to react. The reaction products for the one atom of zinc and one molecule of sulfuric acid will be one molecule of zinc sulfate and one molecule of hydrogen.

Identify how many moles of zinc metal and how many moles of pure sulfuric acid will be required to produce 15 moles of hydrogen gas.
file i04115

Question 54

When "table" sugar is added to water, at first the sugar crystals seem to disappear as they dissolve. But, if enough sugar is added to the water, eventually sugar crystals will begin to form at the bottom of the container. In the context of this example, define the terms *solute*, *solvent*, *solution*, *saturation*, *supersaturation*, *precipitate*, and *supernatant*.

file i00558

Question 55

Contrast the following chemical terms: *solution*, *suspension*, and *colloid*. Furthermore, determine whether each of these mixtures is a solution, a suspension, or a colloid:

- Muddy water
- Household ammonia
- Milk
- Rubbing alcohol
- Tobacco smoke in air
- Battery acid
- Whipped cream
- Dusty air
- Sugar water
- Coffee

Colloids are often subdivided into the following types: *aerosols*, *foams*, *emulsions*, and *sols*. Explain what each of these different colloids are, and classify all colloids in the list above as one of these sub-categories.

file i00559

Question 56

Calculate the mass of 2.1 moles of ammonium carbonate $(NH_4)_2CO_3$. Feel free to use atomic mass values rounded to the nearest whole number (from a Periodic Table) in your calculation.

Suggestions for Socratic discussion

- Demonstrate how to *estimate* numerical answers for this problem without using a calculator.

  file i04117

Question 57

When hydrogen and oxygen combine under sufficient pressure and/or temperature, they react to form water (H_2O) in a simple example of *combustion*. If these are the only elements involved, and the samples are pure, water is the only byproduct of the reaction (in addition to heat energy, of course).

Hydrogen, as a gas at room temperature and atmospheric pressure, exists as pairs of atoms (a *diatomic* molecule) denoted as H_2. Likewise, oxygen as a gas at room temperature and atmospheric pressure exists as pairs of atoms (O_2) as well.

If I have a quantity of pure hydrogen gas equal to 250 moles, how many moles of pure oxygen gas will be needed to completely react with (burn) the hydrogen gas sample? Assume a gas pressure of 830 mm HgA.

Suggestions for Socratic discussion

- Should the ΔH value for the combustion reaction have a positive or a negative value?
- The main engines on the Space Shuttle use hydrogen as the fuel and oxygen as the oxidizer. Thus, the only emission in the exhaust of these engines is water vapor. Does that mean these engines are completely non-polluting?

file i00569

Question 58

When methyl alcohol ("methanol") vapor is mixed with air at sea-level atmospheric pressure and room temperature (25 ^{o}C), a molecular concentration of 1 ppm (1 molecule of methanol for every 1,000,000 sample molecules) is equivalent to a mass concentration of 1.31 milligrams methanol per cubic meter.

Use the Ideal Gas Law to prove this equivalence for methanol (1 ppm = 1.31 mg/m^3).
file i04120

Question 59

A theory of medicinal therapy originating in the early 1800's consisted of taking samples of substances known to induce ill effects in patients, and then diluting those substances with a solvent such as alcohol or water to an extreme degree, finally administering the diluted solution to the patient as a cure for an ailment with symptoms similar to the ill effects induced by the pure substance. Here is a sample of text from a book written by the inventor of this technique:

> If two drops of a mixture of equal parts alcohol and the recent juice of any medicinal plant be diluted with 98 drops of alcohol in a vial capable of containing one hundred and thirty drops, and the whole twice shaken together, the medicine becomes exhalted in energy (*potenzirt*) to the first development of power, or, as it may be denominated, the first potence. The process is to be continued through twenty-nine additional vials, each of equal capacity with the first, and each containing ninety-nine drops of spirits of wine; so that every successive vial, after the first, being furnished with one drop from the vial or dilution immediately preceding (which had been just twice shaken), is, in its turn, to be shaken twice, remembering to number the dilution of each vial upon the cork as the operation proceeds. These manipulations are to be conducted thus through all the vials, from the first up to the thirtieth or decillionth development of power (*potenzirte Decillion-Verdunnung, X*) which is the one in most general use.

We will use this dilution recipe to calculate the number of molecules contained in the dilution vials. To do this, we will assume one drop of pure medicinal plant juice contains 0.0006 moles of the juice's active ingredient, and one drop of pure ethyl alcohol contains the same number of moles (0.0006) of alcohol.

Calculate the number of moles of active ingredient contained in the first vial (containing a 2:98 ratio of drops of diluted juice to drops of pure solvent):
n_1 = _____ moles

Calculate the number of moles of active ingredient contained in the second vial (containing a 1/100 dilution of the first vial's solution):
n_2 = _____ moles

Calculate the number of moles of active ingredient contained in the third vial (containing a 1/100 dilution of the second vial's solution):
n_3 = _____ moles

Continue this all the way until the thirtieth vial:
n_{30} = _____ moles

How many actual *molecules* of active ingredient does this molar quantity represent?
N_{30} = _____ molecules

file i00945

Question 60

Question 61

Read and outline the introduction to the "Stoichiometry" section of the "Chemistry" chapter in your *Lessons In Industrial Instrumentation* textbook.

The purpose of your outline is to foster close reading of the text, to facilitate quick referencing of specific points within the text, to record questions of your own, and to practice clear writing. Your outline must meet the following standards for full credit: *every major idea contained in the text represented in your outline, entirely in your own words (i.e. no copying of text), written in a legible and comprehensible manner, of sufficient quality that others would find it informative.* Incomplete, illegible, cryptic, and/or plagiarized outlines will not receive full credit. A suggestion is one sentence of your own per paragraph of source text. A well-written outline contains the following:

- Questions of your own and requests for clarification after reading the text
- Page numbers from the source text for quick reference during discussion
- Images copied from the text (or sketched by you) to illustrate concepts
- Acknowledgement of previously learned concepts
- Descriptions of problem-solving strategies applied by the author

file i04106

Question 62

Read and outline the "Balancing Chemical Equations Using Algebra" subsection of the "Stoichiometry" section of the "Chemistry" chapter in your *Lessons In Industrial Instrumentation* textbook.

The purpose of your outline is to foster close reading of the text, to facilitate quick referencing of specific points within the text, to record questions of your own, and to practice clear writing. Your outline must meet the following standards for full credit: *every major idea contained in the text represented in your outline, entirely in your own words (i.e. no copying of text), written in a legible and comprehensible manner, of sufficient quality that others would find it informative.* Incomplete, illegible, cryptic, and/or plagiarized outlines will not receive full credit. A suggestion is one sentence of your own per paragraph of source text. A well-written outline contains the following:

- Questions of your own and requests for clarification after reading the text
- Page numbers from the source text for quick reference during discussion
- Images copied from the text (or sketched by you) to illustrate concepts
- Acknowledgement of previously learned concepts
- Descriptions of problem-solving strategies applied by the author

file i04108

Question 63

German submarines in World War II used highly purified hydrogen peroxide (H_2O_2) as a monopropellant for their torpedo propulsion systems: when placed in contact with a catalyst, hydrogen peroxide spontaneously decomposes to produce water (H_2O), oxygen (O_2), and a lot of heat. Write a balanced equation showing all reactants and all reaction products in the proper proportions.

Also, determine how many *moles* of water and how many *moles* of O_2 will be produced when exactly three moles of hydrogen peroxide decomposes.

Suggestions for Socratic discussion

- Explain how to check your work to make sure the final equation is properly balanced.
- Should the peroxide decomposition reaction have a *positive* or *negative* ΔH value written next to it?
- Explain *why* this reaction is exothermic, based on an analysis of the reaction equation: where is energy being absorbed, and where is energy being released? What can we tell about the relative bond strengths of oxygen to H_2O, versus oxygen to itself?
- Explain the purpose of using a *catalyst* to initiate the decomposition reaction of hydrogen peroxide in such a torpedo.
- Will the catalyst be consumed in the decomposition reaction?

file i00903

Question 64

Orthophosphoric acid (H_3PO_4) is formed by combining tetraphosphorus decoxide (P_4O_{10}) with water (H_2O). Write a balanced equation showing all reactants and all reaction products in the proper proportions.

Also, determine how many *moles* of tetraphosphorus decoxide need to be added to twenty moles of water to completely react, and how many *moles* of acid will be produced as a result.

Suggestions for Socratic discussion

- Explain how to check your work to make sure the final equation is properly balanced.

file i00901

Question 65

Read and outline the introduction to the "Energy in Chemical Reactions" section as well as the "Heats of Reaction and Activation Energy" subsection of the "Chemistry" chapter in your *Lessons In Industrial Instrumentation* textbook.

The purpose of your outline is to foster close reading of the text, to facilitate quick referencing of specific points within the text, to record questions of your own, and to practice clear writing. Your outline must meet the following standards for full credit: *every major idea contained in the text represented in your outline, entirely in your own words (i.e. no copying of text), written in a legible and comprehensible manner, of sufficient quality that others would find it informative.* Incomplete, illegible, cryptic, and/or plagiarized outlines will not receive full credit. A suggestion is one sentence of your own per paragraph of source text. A well-written outline contains the following:

- Questions of your own and requests for clarification after reading the text
- Page numbers from the source text for quick reference during discussion
- Images copied from the text (or sketched by you) to illustrate concepts
- Acknowledgement of previously learned concepts
- Descriptions of problem-solving strategies applied by the author

file i04109

Question 66

Green plants convert carbon dioxide (CO_2) and water (H_2O) into glucose sugar ($C_6H_{12}O_6$) and oxygen gas (O_2) using sunlight as the energy input, which is why this reaction is called *photo*synthesis. This reaction is catalyzed, with the catalyst being a green-colored substance called *chlorophyll*. Write a balanced equation showing all reactants and all reaction products in the proper proportions.

Also, describe the role photosynthesis plays in the sustenance of biological life on earth, especially the life of mammals such as ourselves who use glucose as a fuel to sustain our own bodies' vital functions. Identify where chemical bonds are formed in the food chain, and where chemical bonds are broken in the food chain, and how this relates to energy.

Suggestions for Socratic discussion

- Explain how to check your work to make sure the final equation is properly balanced.
- Is the photosynthesis reaction *exothermic* or *endothermic*?
- Should the photosynthesis reaction have a *positive* or *negative* ΔH value written next to it?
- What happens to the chlorophyll after the reaction completes? Does it need to be replenished?
- Explain why plants will not continue to grow if starved of sunlight.
- Explain why some plants actually will grow (at least for a time) if cut off at ground level where there is no longer any exposed surface area to collect sunlight.
- Explain why photosynthesis does not occur in the absence of chlorophyll despite the presence of all necessary reactants plus sunshine.
- Would it be possible to grow plants under artificial light (from special electric lamps), then harvest those plants and burn them as fuel to power a generator to keep the grow-lights lit? Explain why or why not.

file i03635

Question 67

A process patented by Siemens for forming rods of ultra-pure silicon used as feedstock for manufacturing solar (photovoltaic) cells is called the "TCS method." "TCS" stands for Tri-Chloro-Silane, and it is a gas with the chemical formula $HSiCl_3$.

The process uses a thread of silicon suspended between two electrical contacts. Electric current passed through the silicon thread heats it up to a high temperature, and then the TCS gas (plus hydrogen gas) is admitted into the vessel called a "CVD reactor" (Chemical Vapor Deposition) at a pressure of 6 bar (gauge). There, the gases contact the silicon thread and react for form pure silicon (Si) and hydrochloric acid (HCl), leaving the silicon as new layers accumulated on the thread. Eventually the thread grows thicker until it becomes a solid rod of silicon ready to process into solar cells. The acid vapors exit the reactor, along with unreacted TCS and hydrogen gases:

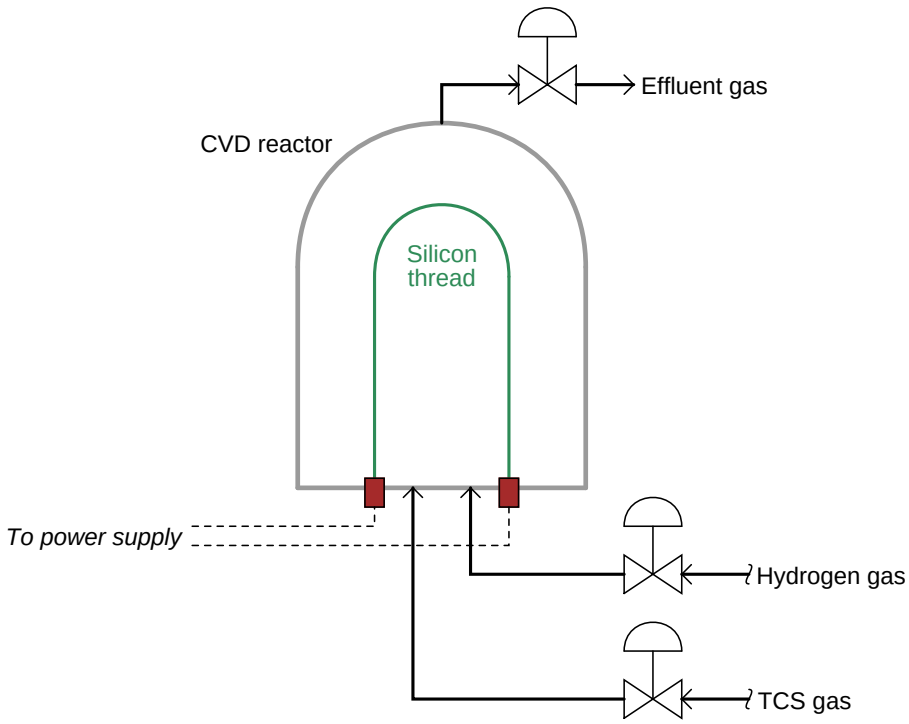

Balance this chemical equation showing the desired reaction forming new layers of silicon on the thread inside the CVD reactor:

$$HSiCl_3 + H_2 \rightarrow Si + HCl$$

Also, express the reactor gas pressure in units of PSIG.

Suggestions for Socratic discussion

- Based on the description of the process, do you suspect the reaction is exothermic or endothermic, or is there too little information given to tell?
- How safe would you consider some of these compounds used in silicon manufacturing, with respect to human exposure?

file i00574

Question 68

Read and outline the "Explosive Limits" subsection of the "Classified Areas and Electrical Safety Measures" section of the "Process Safety and Instrumentation" chapter in your *Lessons In Industrial Instrumentation* textbook.

The purpose of your outline is to foster close reading of the text, to facilitate quick referencing of specific points within the text, to record questions of your own, and to practice clear writing. Your outline must meet the following standards for full credit: *every major idea contained in the text represented in your outline, entirely in your own words (i.e. no copying of text), written in a legible and comprehensible manner, of sufficient quality that others would find it informative.* Incomplete, illegible, cryptic, and/or plagiarized outlines will not receive full credit. A suggestion is one sentence of your own per paragraph of source text. A well-written outline contains the following:

- Questions of your own and requests for clarification after reading the text
- Page numbers from the source text for quick reference during discussion
- Images copied from the text (or sketched by you) to illustrate concepts
- Acknowledgement of previously learned concepts
- Descriptions of problem-solving strategies applied by the author

file i04110

Question 69

A common analytical sensor used to detect potentially explosive gases (often called a *LEL analyzer* in reference to "Lower Explosive Limit") is the *catalytic combustible gas sensor*. In this type of sensor, a fine platinum wire is heated by an electric current, and covered by a catalytic substance. If a mixture of flammable gas(es) and air comes into contact with the sensor, the ensuing combustion will cause the platinum wire to heat up, thus increasing the wire's resistance and signaling the presence of a potentially explosive gas.

In this particular LEL analyzer, two identical platinum wire sensors are connected in series, one of them exposed to a steady stream of sample gas and the other sealed where no gas can reach it. The voltages dropped by these two resistance elements are digitized by a pair of analog-to-digital converters (ADCs) and interpreted by a microcontroller:

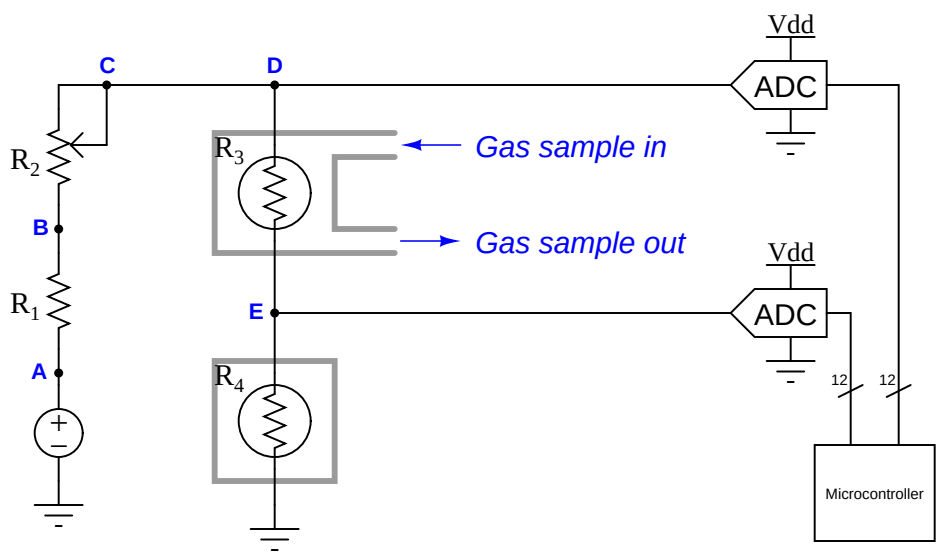

Supposing this circuit is faulty (signaling the presence of explosive gas even when there is no gas present), where would you begin taking diagnostic measurements to isolate the nature of the fault? Under what sample gas conditions would you prefer to perform these measurements, and why?

Suggestions for Socratic discussion

- Why do you suppose the two catalytic wire sensors are connected in *series* rather than in parallel?
- What are the values of some electrical measurements you would expect to see in a "healthy" circuit, and what might you expect to see in a circuit where the active gas sensor has failed?
- What are some component failures that could cause the microcontroller to see a "hotter" signal for R_3 than for R_4? What effect would this have on gas detection?
- What are some component failures that could cause the microcontroller to see a "colder" signal for R_3 than for R_4? What effect would this have on gas detection?
- What would happen if resistor R_1 were to fail open?
- What would happen if resistor R_1 were to fail shorted?
- What would happen if rheostat R_2 were to decrease in resistance?
- What would happen if rheostat R_2 were to increase in resistance?
- Why do you suppose the sensor's platinum wire is coated with a *catalyst*?
- This type of LEL sensor is dependent upon the amount of oxygen present in the gas sample. Determine the effect that oxygen concentration will have on this type of analyzer (i.e. will an increased oxygen concentration make the instrument "think" there is *more* or *less* flammable gas present?), and then devise a method by which this interference may be compensated.

file i01592

Question 70

Silane is a flammable and toxic gas (SiH_4, also called silicon tetrahydride) used widely in silicon semiconductor manufacturing processes. If a leak develops in a pipe carrying silane, the result is immediate combustion, each molecule of silane gas combining with two molecules of atmospheric oxygen (O_2).

One of the products of silane + oxygen combustion is water vapor (2 molecules of H_2O produced for each molecule of silane). There is only one other combustion product. Determine what this product is, and how many molecules of it are produced for each molecule of silane gas entering the reaction.

file i00575

Question 71

A popular concept for automotive fuel is *hydrogen*. One of the main attractions of hydrogen as a fuel is that it is clean: no pollutants are formed (ideally) when hydrogen is burned. If "burned" in a fuel cell instead of by combustion in air, pure water is the only chemical byproduct of the reaction.

However, there are some serious public *misconceptions* about hydrogen as a fuel source. One of the most common misconceptions is the availability of hydrogen fuel. Since most people know that water is comprised of hydrogen and oxygen (H_2O), a common public belief is that we have unlimited reserves of hydrogen fuel stored in the oceans. All we need to do, so goes the logic, is separate the hydrogen from the oxygen and then we'll have a limitless supply of fuel and all our energy problems will be solved.

Based on what you know of chemical reactions and energy exchange, explain why this belief is fundamentally flawed.

file i00578

Question 72

We know that when hydrogen and oxygen combine to form water, heat energy is liberated. This is typical of the chemical bonding process: *bond-forming is exothermic.*

We may plot this as a function of potential energy to obtain a graphical understanding:

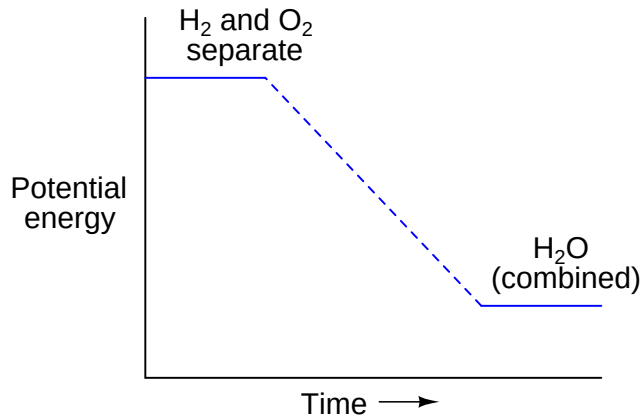

As separate H_2 and O_2 molecules, the total potential energy in the H-H and O-O bonds is greater than the bonds in a complete H-O-H molecule. Thus, to step from a position of high potential energy to a position of low potential energy is to release energy, like dropping a rock from a high point to a low point. The lower potential energy of the water molecule accounts for the exothermic release of energy in the combustion of hydrogen and oxygen.

However, there is more to the story than a downhill fall. After all, you can put hydrogen and oxygen gas in the same space without having spontaneous combustion! Just because these molecules have a *tendency* to combine to form water does not mean they will *always* do so. By analogy, just because rocks have a tendency to fall downhill does not mean all rocks in the world have fallen!

The "something" missing in this picture is called *activation energy.* Explain what activation energy is in a chemical reaction, how it would be represented on the graph, and how chemical substances called *catalysts* affect the activation energy of a chemical reaction.

file i00579

Question 73

When methane (CH_4) and oxygen (O_2) gas combine under sufficient pressure and/or temperature, they react to form carbon dioxide (CO_2) gas and water (H_2O). The following chemical equation shows the combustion of methane and oxygen to form carbon dioxide and water:

$$CH_4 + O_2 \rightarrow CO_2 + H_2O$$

Unfortunately, this equation is incomplete. Although it does indicate the *identities* of the reaction products (carbon dioxide and water), it does not indicate their *relative quantities*. A simple head-count of atoms on each side of the equation confirms this:

Reactants	**Reaction products**
Carbon = 1	Carbon = 1
Hydrogen = 4	Hydrogen = 2
Oxygen = 2	Oxygen = 3

Since we know it would violate the Law of Mass Conservation (one of the fundamental laws of physics) to have fewer atoms of each element coming out of a reaction than going into it, we know this equation must be incomplete.

To make this a *balanced* equation, we must determine how many molecules of methane, oxygen, carbon dioxide, and water are involved in this reaction so that the numbers of atoms for each element are the same on both sides of the equation.

Re-write this chemical equation so that it is balanced.

Furthermore, calculate the number of moles of oxygen gas needed to completely react (burn) 1400 moles of methane gas under ideal conditions.

file i00570

Question 74

When pentane (C_5H_{12}) is burned with oxygen (O_2) under ideal conditions, the products are water vapor (H_2O) and carbon dioxide (CO_2). Write a balanced equation showing all reactants and all reaction products in the proper proportions.

file i00905

Question 75

When propane (C_3H_8) is burned with oxygen (O_2) under ideal conditions, the products are water vapor (H_2O) and carbon dioxide (CO_2). Write a balanced equation showing all reactants and all reaction products in the proper proportions.

file i00902

Question 76

When butane (C_4H_{10}) is burned with oxygen (O_2) under ideal conditions, the products are water vapor (H_2O) and carbon dioxide (CO_2). Write a balanced equation showing all reactants and all reaction products in the proper proportions.

file i00904

Question 77

Reforming furnaces are special process furnaces used to generate pure hydrogen gas from a hydrocarbon feed gas, such as methane. The balanced chemical reaction for this process is as follows:

$$CH_4 + H_2O \rightarrow 3H_2 + CO$$

Methane gas (CH_4) added to steam (H_2O) at high temperatures forms hydrogen gas (H_2) and carbon monoxide gas (CO), the latter converted into CO_2 and more hydrogen gas in subsequent reactions. The chemical reaction is *endothermic*, meaning that it requires energy input rather than liberating energy (as what happens in an *exothermic* process such as combustion). Typically, the reaction takes place in the presence of a catalyst. A simplified control system for a reforming furnace is shown here:

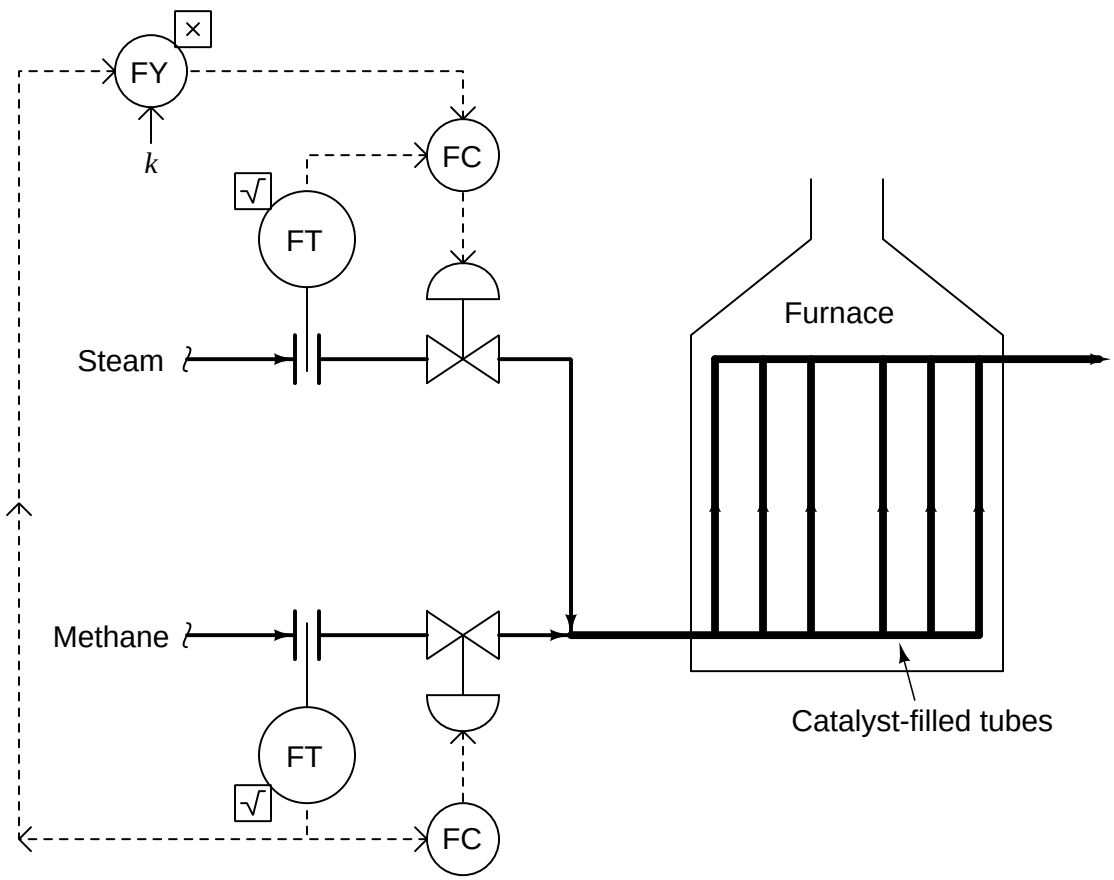

What factor or factors determine the setting of the multiplying constant k? Is this factor something that is liable to change much? Why or why not?

Suggestions for Socratic discussion

- For those who have studied chemistry, write a balanced chemical equation showing how methane and steam could combine to form hydrogen and carbon *dioxide* (CO_2) rather than carbon monoxide (CO).
- Explain what would happen in this process if the methane flow transmitter failed with a low signal.
- Explain what would happen in this process if the methane flow transmitter failed with a high signal.
- Explain what would happen in this process if the steam flow transmitter failed with a low signal.
- Explain what would happen in this process if the steam flow transmitter failed with a high signal.

- Explain what would happen in this process if the methane control valve failed fully shut.
- Explain what would happen in this process if the methane control valve failed wide-open.
- Explain what would happen in this process if the steam control valve failed fully shut.
- Explain what would happen in this process if the steam control valve failed wide-open.
- Explain what would happen in this process if some of the catalyst-filled tubes were to become partially plugged with carbon (coke) deposits.

file i01738

Question 78

The spontaneous decomposition of *acetylene* gas (C_2H_2) into carbon and hydrogen (2C and H_2) might seem at first as though it should be endothermic, but the reaction is actually exothermic. Explain why one might be led to think this is endothermic, and then explain how it is possible for the reaction to be exothermic, based on what you know about energy exchange and the breaking and formation of molecular bonds.

file i02416

Question 79

Question 80

Question 81

Suppose two storage tanks of different size both hold gas at the same low pressure (less than 1 PSI), with no liquid at all:

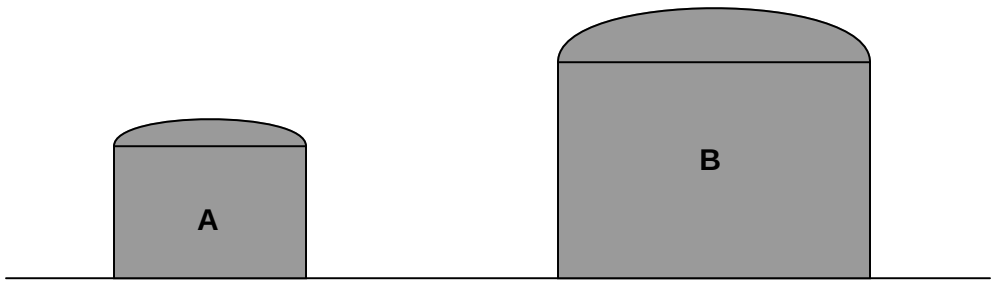

Use the Ideal Gas Law ($PV = nRT$) to determine what will happen to these two tanks' gas pressures as both tanks become heated by sunlight later in the day. Assume their gas pressures were equal when both tanks were cold (ambient temperature in the early morning), and that both tanks are perfectly sealed (no gas entering or exiting as the tanks warm). Choose the best answer matching your prediction:

- Both tanks' pressures will increase, tank A's pressure increasing more than tank B's
- Both tanks' pressures will increase, tank B's pressure increasing more than tank A's
- Both tanks' pressures will increase by the same amount
- Tank A's pressure will increase while tank B's pressure will decrease
- Tank B's pressure will increase while tank A's pressure will decrease
- Both tanks' pressures will decrease by the same amount
- Both tanks' pressures will decrease, tank A's pressure decreasing more than tank B's
- Both tanks' pressures will decrease, tank B's pressure decreasing more than tank A's

file i00029

Question 82

Determine the number of moles of oxygen (O_2) required to completely burn 1 mole of propane (C_3H_8) under ideal conditions, with the only combustion products being water vapor (H_2O) and carbon dioxide (CO_2). Write a balanced chemical equation for complete combustion of propane with oxygen to support your calculations.

Then, determine the number of *pounds* of oxygen required to completely burn 1 *pound* of propane, showing in your work how to calculate the required oxygen mass.

file i00623

Question 83

A water electrolyzer circuit converts AC power into DC, using a *shunt resistor* to help measure the amount of current passing through the electrolysis cells:

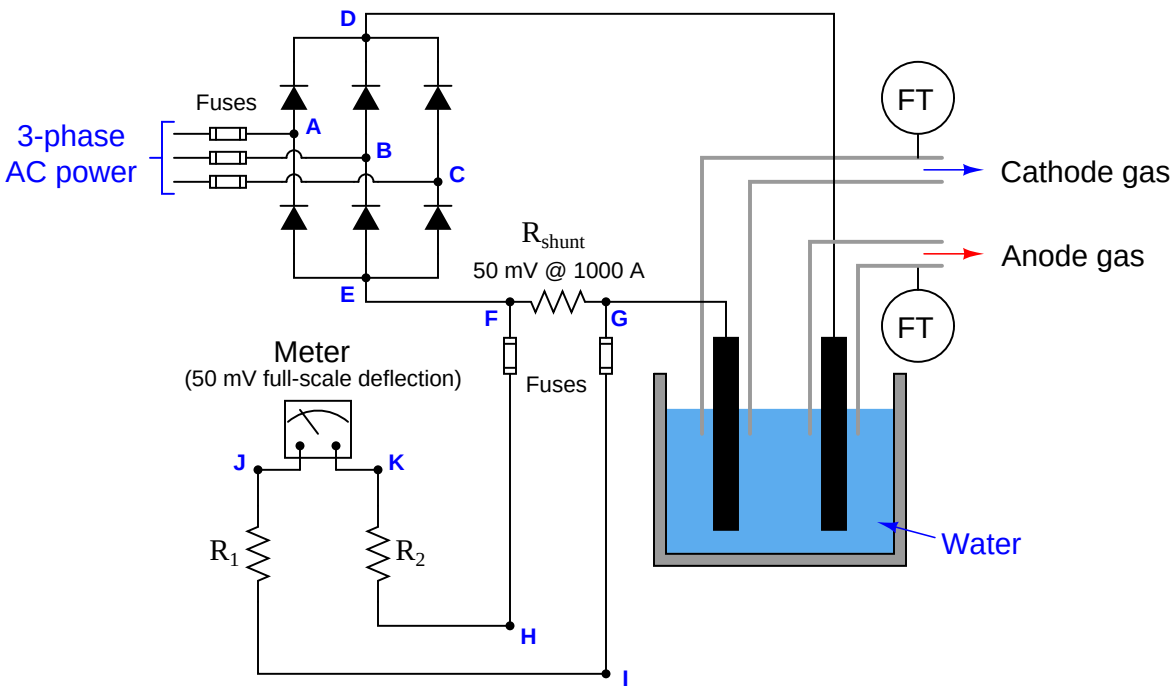

One day the operator for this electrolytic process calls you to say the gas production has suddenly stopped, yet the current meter indicates more than 1000 amps (the operator reports the meter as being "pegged" full-scale!). Your first step is to measure voltage between points **I** and **H**, and there your multimeter shows far greater than 50 millivolts DC.

Identify the likelihood of each specified fault for this circuit. Consider each fault one at a time (i.e. no coincidental faults), determining whether or not each fault could independently account for *all* measurements and symptoms in this circuit.

Fault	Possible	Impossible
R_1 or R_2 failed open		
R_{shunt} failed open		
One meter fuse blown		
One AC power fuse blown		
R_1 or R_2 failed shorted		
R_{shunt} failed shorted		
Open wire between G and cathode		
Open wire between D and anode		

Also, identify the gas types you would expect to find coming off the anode and cathode, respectively, and a good choice for flowmeter technologies to measure the flow of each gas.

file i00622

Question 84

This simplified PFD shows the *fluid catalytic cracking* or *FCC* process, used extensively in American oil refineries. FCC processes employ finely-powdered catalyst to accelerate chemical reactions where heavy liquid hydrocarbon molecules are split ("cracked") into lighter molecules, producing petroleum liquids with greater market value. This is not unlike the chemical process of *biomass gasification*, where solid fuel materials are broken down by intense heat into simpler, flammable gases with more flexible application as fuels:

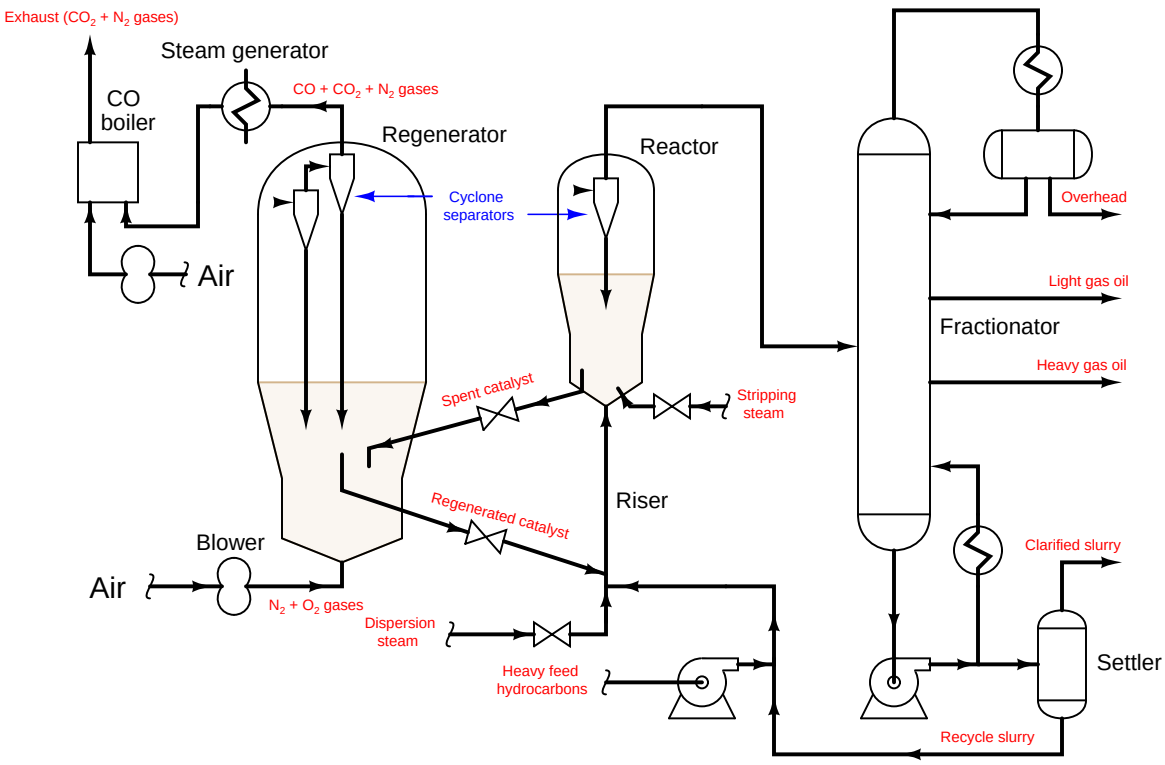

The cracking reactions begin in the riser and continue in the reactor, with the catalyst powder carried along by the steam and hydrocarbon fluids. These reactions leave much of the catalyst powder covered with coke (solid carbon deposits) which limits its effectiveness as a catalyst. This "spent" catalyst falls by gravity into the regenerator, where it encounters a blast of air entering the bottom of the vessel, converting the carbon deposits into CO and CO_2 gases and "fluidizing" the catalyst powder once again so it flows freely back to the riser. The hot gases leaving the regenerator pass through a heat exchanger to boil water into useful steam, then pass to a burner where more air is introduced to convert the CO gas into CO_2 gas and generate more steam with the heat. Vapors leaving the top of the reactor vessel are distilled into their constituent compounds in the fractionator vessel, with the heaviest of them recycled back to the reactor for re-processing.

Identify whether the major chemical reactions are *exothermic* or *endothermic* in each of the following process vessels, explaining your rationale for each case:

- Reactor
- Regenerator
- CO boiler

file i00628

Question 85

Suppose a gas turbine engine at the gas-fired power plant you are working at vents 47,000 SCFM of exhaust gases while operating at full power. The measured NO_2 concentration of the engine's exhaust gas is 5 ppm (by volume) at full power. Calculate both the number of moles of NO_2 emitted and the mass of NO_2 emitted by this engine per 24-hour day, assuming it runs at full power the whole time.

Assume "standard" conditions of 1 atmosphere and 68°F for the "SCFM" gas flow quantity. Be sure to show all your work!

file i00682

Question 86

Solve for x, y, and z in this simultaneous system of equations:

$$x + 3y + 5z = 19$$

$$4x - y + 2z = 3$$

$$4x - y - z = 6$$

file i00931

Question 87

Explain where and how TIR-38 and DIR-38 get their data to display to the operators, based on the information in this P&ID for a waste gas incinerator. Specifically, which physical principles are used to measure these parameters of the gas?

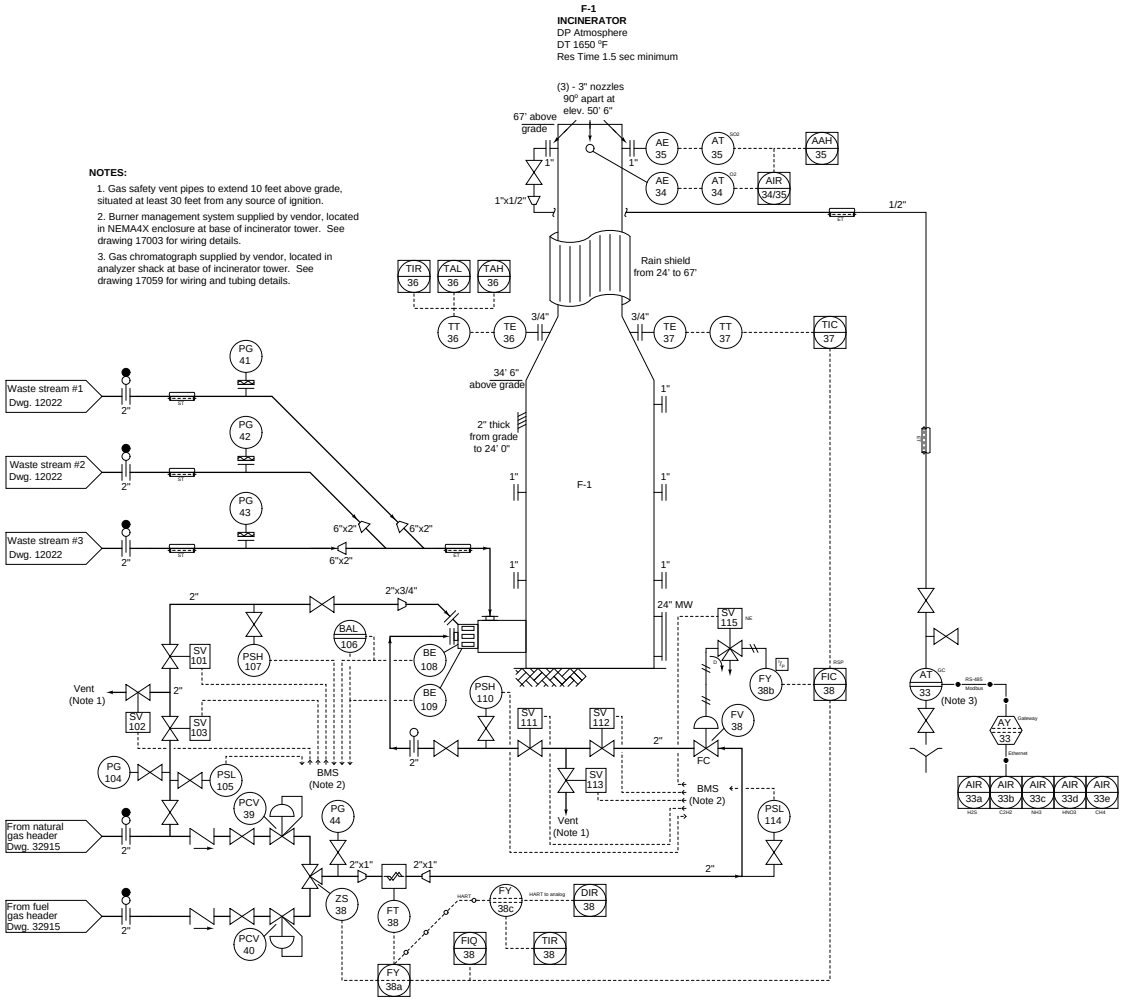

file i03238

Question 88

Calculate the current and all voltage drops in this loop-powered transmitter circuit, assuming the pressure transmitter is calibrated for a range of 0 to 70 PSI, 4 to 20 mADC. Be sure to show all your work!

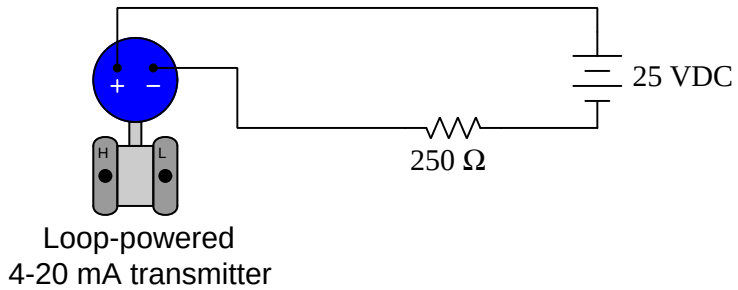

Applied pressure (PSI)	Current (mA)	Transmitter voltage (V)	Resistor voltage (V)
0 PSI			
15 PSI			
20 PSI			
35 PSI			
60 PSI			
70 PSI			

file i03232

Question 89

Sketch a circuit whereby two loop-powered pressure transmitters send signals to two isolated channels on a datalogger, a device that records electronic signals over long periods of time. Include one DC power supply in your circuit, along with any other components necessary to make the two 4-20 mA loops work:

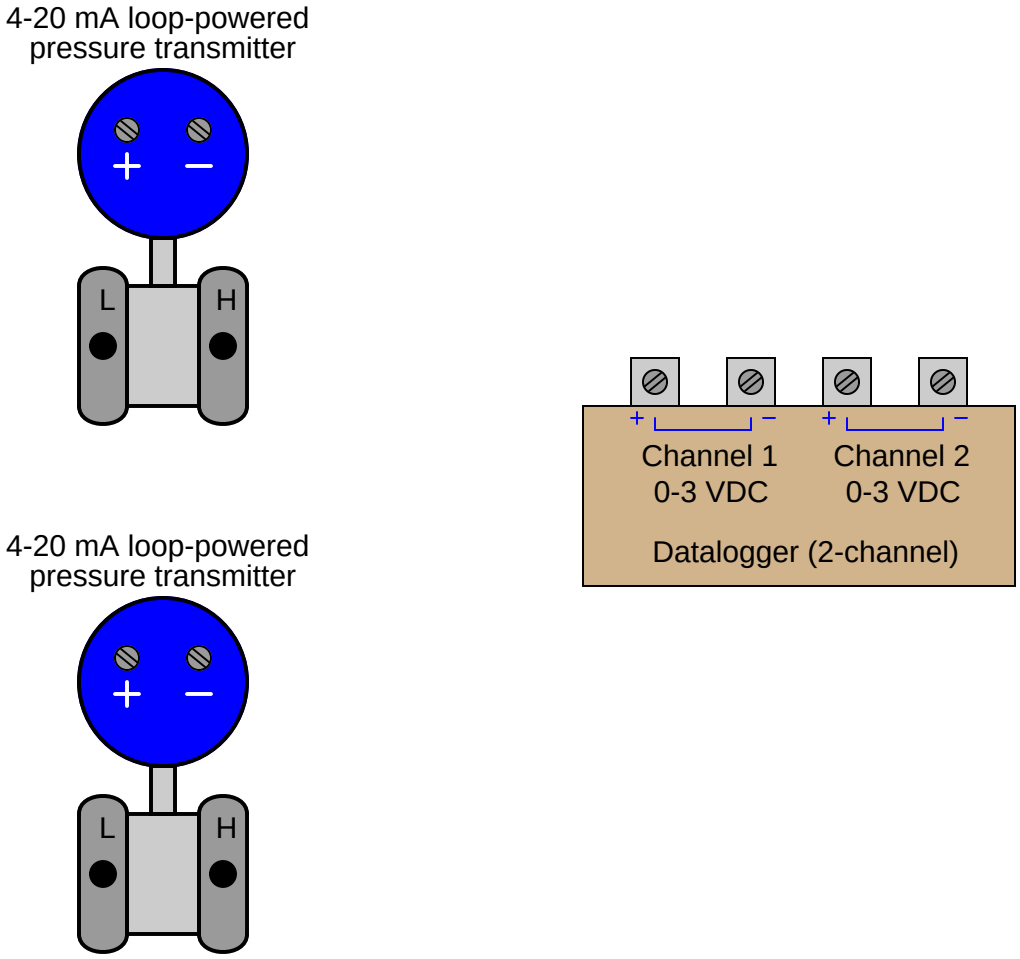

file i02672

Question 90

A technician is troubleshooting a power supply circuit with no DC output voltage. The output voltage is supposed to be 15 volts DC, but instead it is actually outputting nothing at all (zero volts):

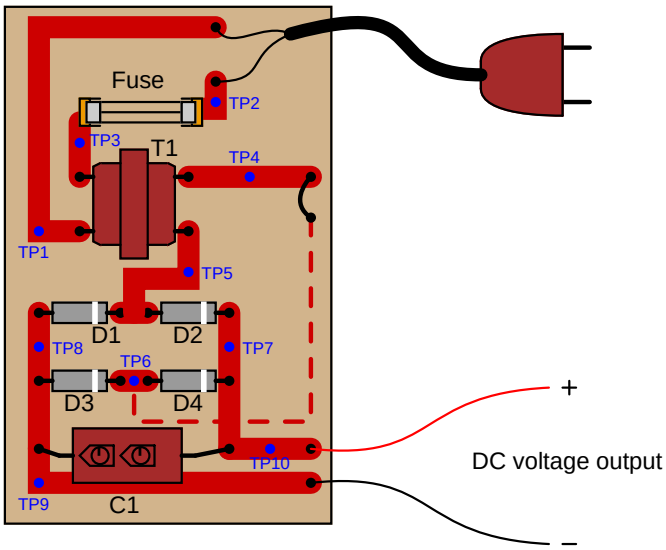

The technician measures 120 volts AC between test points TP1 and TP3. Based on this voltage measurement and the knowledge that there is zero DC output voltage, identify two possible faults (either one of which could account for the problem and all measured values in this circuit), and also identify two circuit elements that could not possibly be to blame (i.e. two things that you know *must* be functioning properly, no matter what else may be faulted). The circuit elements you identify as either possibly faulted or properly functioning can be wires, traces, and connections as well as components. Be as specific as you can in your answers, identifying both the circuit element and the type of fault.

- Circuit elements that are possibly faulted

1.
2.

- Circuit elements that must be functioning properly

1.
2.

file i03176

Question 91

Lab Exercise – introduction

Your task is to build, document, and troubleshoot an analytical measurement system consisting of a digital electronic analytical transmitter connected to an electronic indicator or recorder (I recommend something other than an indicating controller, just to make this system different). Process variable options include pH measurement, conductivity measurement, or any other analyzer available in the lab's collection.

The following table of objectives show what you and your team must complete within the scheduled time for this lab exercise. Note how some of these objectives are individual, while others are for the team as a whole:

Objective completion table:

Performance objective	**Grading**	**1**	**2**	**3**	**4**	**Team**
Team meeting and prototype sketch (do *first!*)	mastery	–	–	–	–	
Circuit design challenge	mastery					– – – –
Final loop diagram and system inspection	mastery					– – – –
Calibration (using chemical standard)	mastery	–	–	–	–	
Loop ranging (± 1% of span accuracy)	mastery					– – – –
Troubleshooting	mastery					– – – –
Safety and professionalism	deduction					
Lab percentage score	proportional					– – – –
Decommission and lab clean-up	(ungraded)	–	–	–	–	
Team tool locker inspection	(ungraded)	–	–	–	–	

The "proportional" score for this activity is based on the number of attempts require to master each objective. Every failed attempt is marked by a 0, and every pass by a 1. The total number of 1 marks divided by the total number of marks (both 1's and 0's) yields a percentage value. Team objectives count as part of every team member's individual score. The *Safety and professionalism* deduction is a flat −10% per instance, levied on occasions of unprofessional or unsafe conduct.

It is essential that your team plans ahead what to accomplish each day. A short (10 minute) team meeting at the beginning of each lab session is a good way to do this, reviewing what's already been done, what's left to do, and what assessments you should be ready for. There is a lot of work involved with building, documenting, and troubleshooting these working instrument systems!

As you and your team work on this system, you will invariably encounter problems. You should always attempt to solve these problems as a team before requesting instructor assistance. If you still require instructor assistance, write your team's color on the lab whiteboard with a brief description of what you need help on. The instructor will meet with each team in order they appear on the whiteboard to address these problems.

Lab Exercise – objectives and expectations

Each objective is assessed at the *mastery* level, which means it is not complete until it meets *all* expectations. Re-tries are allowed, but failed attempts will be recorded and factored into your score for this lab exercise.

Team meeting and prototype sketch

Meet with your instructor prior to any project construction, presenting the design as a prototype sketch. *Analyze the circuit represented in your prototype sketch, being sure to annotate the diagram with all expected voltages and currents, and identifying all electrical sources and loads. Be prepared to identify the effects of specific faults your instructor may propose in this circuit, applying principles such as series and parallel network properties, Kirchhoff's Laws, and Ohm's Law.* Read the lab exercise documentation in its entirety and discuss with your teammates prior to this meeting, where you may ask questions and clarify expectations with the instructor. Be prepared to answer questions from your instructor about this lab exercise, especially regarding any unique safety or procedural details described in the documentation.

Circuit design challenge

Design, build, and demonstrate the operation of a simple circuit based on random selections by the instructor, using a digital oscilloscope as the test instrument.

Final loop diagram and system inspection

Create a complete loop diagram of your team's completed system according to the ISA 5.1 standard, then show that the constructed system meets or exceed all standards described in the lab exercise documentation.

Instrument calibration

Calibrate an analytical transmitter against a trusted chemical standard, using a trusted test instrument for verifying signal current values. Complete both As-Found and As-Left calibration tables, and tag when complete.

Loop ranging

Set the lower- and upper-range values (LRV and URV) in both the transmitter and indicator as randomly selected by the instructor, demonstrating accurate measurement of the process variable to within ± 1% of span.

Troubleshooting

Logically diagnose the nature and location of a fault placed in a working system that your team did not build. This will be limited in time, with each student passing or failing individually.

Lab percentage score

Successful completion of the lab exercise requires demonstrated mastery of all objectives. A percentage value is based on the number of attempts required to achieve mastery on these objectives: the number of objectives divided by the number of total attempts equals the percentage. Thus, a perfect lab percentage score is possible only by completing all objectives on the first attempt. Marks given for team objectives factor into each individual's score. If one or more members of a team repeatedly compromise team performance, they may be removed from the team and required to complete remaining lab exercises alone.

Deductions from this percentage value will be levied for instances of unsafe or unprofessional conduct (see below), the final result being the lab percentage score.

Safety and professionalism (deduction)

In addition to completing the specified learning objectives in each lab exercise, each student is responsible for abiding by all lab safety standards and generally conducting themselves as working professionals (see the *General Values, Expectations, and Standards* page near the beginning of every worksheet for more detail). Expectations include maintaining an orderly work environment and returning all tools and test equipment by the end of every school day (team), as well as following clear instructions (e.g. instructions given in equipment manuals, lab documentation, verbally by the instructor), communicating with teammates, and productively managing time. As with the other objectives, chronic patterns of poor performance in this domain may result in the offending student being removed from the team. Deductions to the lab percentage score will *not* be made for performance already graded such as tardiness and attendance.

General format and philosophy

This lab exercise is *project-based:* the instructor serves as the project engineer, while each student's role is to implement the standards set for the project while budgeting time and resources to complete it by the deadline date. Students perform real work as part of the lab exercise, managing their work day and functioning much the same as they will on the job. The tools and equipment and materials used are all industry-standard, and the problems encountered are realistic. This instructional design is intentional, as it is proven effective in teaching project management skills and independent working habits.

When you require the instructor's assistance to answer a question or to check off an objective, write your name (or your team's name) on the lab room whiteboard. Questions take priority over checkoffs, so please distinguish questions from other requests (e.g. writing a question-mark symbol "?" after your name makes this clear). **There will be times when you must wait for extended periods** while the instructor is busy elsewhere – instant service is an impossibility. Adequate time does exist to complete the lab exercise if you follow all instructions, communicate well, and work productively. Use all "down time" wisely: filling it with tasks not requiring the instructor's assistance such as other lab objectives, homework, feedback questions, and job searches.

Remember that the lab facility is available to you at all hours of the school day. Students may perform non-hazardous work (e.g. circuit work at less than 30 volts, documentation, low air pressures, general construction not requiring power tools) at any time without the instructor's presence so long as that work does not disturb the learning environment for other students.

DO NOT TAKE SHORTCUTS when completing tasks! Learning requires focused attention and time on task, which means that most 'shortcuts" actually circumvent the learning process. Read the lab exercise instructions, follow all instructions documented in equipment manuals, and follow all advice given to you by your instructor. Make a good-faith effort to solve all problems on your own *before* seeking the help of others. Always remember that this lab exercise is just a means to an end: no one *needs* you to build this project; it is an activity designed to develop marketable knowledge, skills, and self-discipline. In the end it is your *professional development* that matters most, not the finished project!

Lab Exercise – team meeting, prototype sketch, and instrument selection

An important first step in completing this lab exercise is to **meet with your instructor** as a team to discuss safety concerns, team performance, and specific roles for team members. If you would like to emphasize exposure to certain equipment (e.g. use a particular type of control system, certain power tools), techniques (e.g. fabrication), or tasks to improve your skill set, this is the time to make requests of your team so that your learning during this project will be maximized.

An absolutely essential step in completing this lab exercise is to work together as a team to **sketch a prototype diagram** showing what you intend to build. This usually takes the form of a simple electrical schematic and/or loop diagram showing all electrical connections between components, as well as any tubing or piping for fluids. This prototype sketch need not be exhaustive in detail, but it does need to show enough detail for the instructor to determine if all components will be correctly connected for their safe function.

For example, if you intend to connect field devices to a PLC (Programmable Logic Controller), your prototype sketch must show how those devices will connect to typical input/output terminals on the PLC, where electrical power will be supplied, etc. Prototype sketches need not show all intermediary connections between components, such as terminal blocks in junction boxes between the field device and the controller.

You should practice good problem-solving techniques when creating your prototype sketch, such as consulting equipment manuals for information on component functions and marking directions of electric current, voltage polarities, and identifying electrical sources/loads. Use this task as an opportunity to strengthen your analytical skills! Remember that you will be challenged in this program to do all of this on your own (during "capstone" assessments), so do not make the mistake of relying on your teammates to figure this out for you – instead, treat this as a problem *you* must solve and compare your results with those of your teammates.

Your team's prototype sketch is so important that the instructor will demand you provide this plan before any construction on your team's working system begins. *Any team found constructing their system without a verified plan will be ordered to cease construction and not resume until a prototype plan has been drafted and approved!* Similarly, you should not deviate from the prototype design without instructor approval, to ensure nothing will be done to harm equipment by way of incorrect connections. Each member on the team should have ready access to this plan (ideally possessing their own copy of the plan) throughout the construction process. Prototype design sketching is a skill and a habit you should cultivate in school and take with you in your new career.

When selecting field instruments for this lab exercise, choose a *process analyzer* (a pH analyzer is recommended) with electronic (4-20 mA) signal output. Many analyzer types, pH included, use remotely-mounted sensing elements along with the transmitter unit. Be sure to locate the appropriate sensing elements for your analyzer. For a pH analyzer, this takes the form of a *combination electrode* stored with its glass sensing bulb immersed in a liquid to prevent dehydration.

Consult documentation from the manufacturer's website to identify how to properly wire, power, and calibrate the transmitter. Your instructor will check to see you have located and are familiar with the equipment manual(s).

After locating a suitable instrument and its associated documentation, you should qualitatively test it prior to installing it in your system. For a pH transmitter, this entails inserting the sensing electrode in a cup of tap water to see that it registers a pH value somewhere near 7.0 (it may be as low as 5.0 or as high as 8.0, depending on the water quality and the condition of the sensing electrode). If the transmitter fails to respond properly, consult the instructor for assistance before tagging it with a label explaining what it does (or what it fails to do). Be sure not to let the pH electrode become dry, as dehydration will very quickly ruin it!

Bear in mind that analyzers powered by their own (non-loop) power source typically behave as current *sources*, and must be connected to the indicating instrument differently than a loop-powered device! Consult the manufacturer's documentation for wiring details.

Planning a functioning system should take no more than an hour if the team is working efficiently, and will save you hours of frustration (and possible component destruction!).

Lab Exercise – circuit design challenge

Design, build, and test a circuit to fulfill one of the functions listed below (randomly selected by your instructor). All electrical connections must be made using a terminal strip (no twisted wires, crimp splices, wire nuts, spring clips, or "alligator" clips permitted). The only electrical source allowed in this circuit will be the function generator.

This exercise tests your ability to apply basic electrical principles to the design, construction, and proving (testing) of a simple passive circuit intended to fulfill a specific function, as well as your ability to use a digital oscilloscope and function generator.

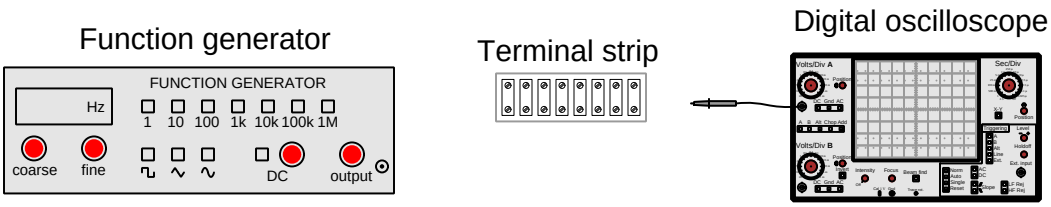

The following components and materials will be available to you: **terminal strips** ; lengths of **hook-up wire** ; digital **oscilloscope** ; and **function generator**. You must provide all electronic components, tools, and digital multimeter (DMM) as well as a copy of this page for your instructor to mark objectives.

SEQUENCE: (1) Instructor chooses criteria; (2) You build and test circuit without any power sources at all; (3) Instructor observes you energizing the circuit for the first time; (4) You demonstrate to the instructor that the circuit fulfills its intended function.

Circuit function (randomly selected by the instructor):

- Voltage divider with total resistance between _____ and _____ ohms, with a division ratio of _____ : _____
- Low-pass filter with total impedance between _____ and _____ ohms, with a cutoff frequency of _____ Hz
- High-pass filter with total impedance between _____ and _____ ohms, with a cutoff frequency of _____ Hz
- Time-delay *charging* where the voltage rises to a value of _____ percent of the final (maximum) in _____ seconds
- Time-delay *discharging* where the voltage falls to a value of _____ percent of the initial (maximum) in _____ seconds
- Phase-shifter with total impedance between _____ and _____ ohms, where the output voltage lags the input voltage by _____ degrees
- Phase-shifter with total impedance between _____ and _____ ohms, where the output voltage leads the input voltage by _____ degrees

Study references: all your textbooks and lessons from the first year of the program. Also, specific modules contained in the *Modular Electronics Learning Project* which is found online at `http://www.ibiblio.org/kuphaldt/socratic/model/index.html`.

Lab Exercise – building the system

The Instrumentation lab is set up to facilitate the construction of working instrument "loops," with over a dozen junction boxes, pre-pulled signal cables, and "racks" set up with 2-inch vertical pipes for mounting instruments. The only wires you should need to install to build a working system are those connecting the field instrument to the nearest junction box, and then small "jumper" cables connecting different pre-installed cables together within intermediate junction boxes.

After getting your prototype sketch approved by the instructor, you are cleared to begin building your system. Many analyzers are designed to be panel-mounted rather than field-mounted (attached to 2-inch pipes using special brackets and U-bolts). Feel free to set your panel-mount analyzer on a table or shelf in lieu of mounting it in an actual panel.

Select a specific loop controller or indicator to act as a display for the measured chemical concentration. Your instructor may choose the indicator for your team.

Finally, your analyzer system needs to have a loop number, so all instruments may be properly labeled. This loop number needs to be unique, so that another team does not label their instruments and cables the same as yours. One way to make your loop number unique is to use the equivalent resistor color-code value for your team's color in the loop number. For example, if you are the "Red" team, your loop number could be "2".

Common mistakes:

- Neglecting to consult the manufacturer's documentation for field instruments (e.g. how to wire them, how to calibrate them).
- Mounting the field instrument(s) in awkward positions, making it difficult to reach connection terminals or to remove covers when installed.
- Failing to tug on each and every wire where it terminates to ensure a mechanically sound connection.
- Students working on portions of the system in isolation, not sharing with their teammates what they did and how. It is important that the whole team learns all aspects of their system!

Building a functioning system should take no more than one full lab session (3 hours) if all components are readily available and the team is working efficiently!

Lab Exercise – loop diagram and system inspection

Each team's system will undergo an inspection simulaneous with inspection of each team member's loop diagram. Team members will exchange diagrams with each other and then verify from those diagrams what the instructor sees when inspecting each and every panel and connection. *Please note that the "Lessons In Industrial Instrumentation" textbook describes good practices for construction and documentation.*

Construction Standards

- All construction must be *safe* (i.e. must not pose any unnecessary hazard to students or visitors). This includes electrical, chemical, thermal, pressure, and general safety hazards (e.g. trip hazards, cut hazards). *Unsafe construction will be dismantled upon discovery.*
- All electrical sources greater than 30 volts must be overcurrent-protected and all related wire connections must be guarded against accidental contact (e.g. use recessed terminals with no exposed metal).
- Proper use of colors for electrical power source wiring (e.g. red and black for DC + and −, black and white for AC "hot" and "neutral", green for earth ground).
- All metallic electrical enclosures must be bonded to earth ground for safety.
- Proper wire types and attachment to terminals (e.g. appropriate wire gauge for the expected current, use of stranded wire wherever possible, correct terminals crimped to ends of wires, no stray wire strands at any point).
- Attached wires must withstand being lightly pulled with fingers.
- Wire insulation must be intact (i.e. no bare wires anywhere).
- Panel wiring must be neat in appearance (e.g. all cables run directly from terminal block to nearest wire duct, with all excess wire length tucked inside wire duct).
- Wiring outside of panels should be run through conduit wherever possible.
- Correct tools must be used at all times. This includes the use of fixed-size wrenches rather than adjustable wrenches whenever possible, box-end over open-end wrenches whenever possible, and the correct type and size of screwdriver used to turn screw heads.
- All electrical components must be located to avoid exposure to liquids.
- All tube and pipe connections must be properly made (e.g. correct "swaging" of tube ends, no over- or under-tightened fittings, Teflon tape or pipe sealant used on all NPT threads).
- All manual controls (e.g. buttons, handles, knobs) must be accessible and function without undue effort.

Documentation Standards

- Loop diagrams must be drawn in accordance with ISA standard 5.1.
- Each instrument must have an appropriate ISA-standard tag name, and this tag name must be visible on the actual instrument (e.g. written on masking tape and attached to the instrument).
- Each signal cable and each signal tube must have an identifying label documented and attached. Long cables must be labeled at each end, as close to the termination points as practical.
- Each team must have its own unique loop number.
- Each instrument's (final) calibrated range must be shown.
- Each control valve's fail mode (e.g. fail-open, fail-closed) or action must be shown.
- All writing must be legible (i.e. easy for anyone to read). *Hint: large-format paper helps!*
- All instrument symbols must be appropriate to the device, function, and location. The large white-colored control panel and the DCS operator stations constitute the *main control room*. All electrical enclosures in the lab room are *auxiliary* locations, and everything else is considered a *field* location.
- Instrument functions shared within a common device must be represented by the "shared" symbol on the diagram (e.g. a controller that is part of a multi-loop control system such as a DCS). Shared controllers must have their identifying loop noted on the diagram (e.g. DCS South Loop #23).
- Any controller I/O cards must be labeled with slot number and channel number in addition to terminal numbers.

- Each location (e.g. field, junction box, control room) must be clearly delineated with vertical seperation lines on the diagram.
- Each diagram must be sufficiently detailed so that no other student will have difficulty locating components (e.g. *"Where is the controller for this loop?"*) or determining important configuration parameters (e.g. range settings).

Sample diagrams are provided in this worksheet (immediately following the lab exercise documentation), and each student is urged to use these sample diagrams as references when drafting their own. The "Lessons In Industrial Instrumentation" textbook also describes ISA-standard documentation practices.

Common mistakes:

- Incorrect tag name format, using letters that do not conform to the ISA 5.1 standard (e.g. including "PLC" or "DCS" in a controller's tag name).
- Forgetting that every instrument's tag name in a loop must begin with the same letter, and that this first letter represents the process variable being measured/controlled.
- Forgetting to label all field instruments with their own tag names (e.g. AT-83).
- Failing to label termination points (e.g. terminal block screws) *exactly* as they are labeled in real life.
- Poor use of space on the diagram paper, causing some portions of the diagram to become "crowded" rather than all components being evenly spaced. *Hint: begin your diagram by sketching the field instrument at the far left of the paper and the control room instrument at the far right of the paper, then draw all other instruments and connections in between!*
- Forgetting to label all signal wires (see example loop diagrams).
- Forgetting to note all wire colors.
- Forgetting to put your name on the loop diagram!
- Leaving junction box cables outside of wire duct, looking messy.
- Leaving wire duct covers off.
- Basing your diagram off of a team-mate's diagram, rather than closely inspecting the system for yourself.
- Not placing loop sheet instruments in the correct orientation (field instruments on the left, control room instruments on the right).

Creating and inspecting accurate loop diagrams should take no more than one full lab session (3 hours) if the team is working efficiently!

Lab Exercise – instrument calibration

Each team must calibrate the transmitter to ensure it interprets chemical composition accurately and outputs an accurate current. Then, each team member must configure the transmitter for a unique range (set the LRV and URV parameters) and scale the indicator to register in the proper engineering units (e.g. a pH analyzer ranged for 4 to 12 pH should actually register 4 to 12 pH back at the control room display). The accuracy of this ranging will be checked by the instructor stimulating the analyzer with a random sample while each student verifies the indicator display.

As in all cases where an instrument must be calibrated, you will need to check the instrument's response against one or more *standards*. In this case, the ideal standard to use for an analyzer is a chemical solution of precisely known composition. For pH instruments, this takes the form of *pH buffer solutions*, easily mixed from distilled water and pH buffer powder. For gas analyzers, this takes the form of either ambient air (21% oxygen content) or more likely bottled *calibration gases*. Chemical calibration standards will be made available by the instructor, and should be used sparingly as they tend to be expensive.

Document the accuracy of your transmitter's measurement at two (minimum) different points throughout its sensing range using these two tables:

As-Found calibration table

Applied concentration	Output signal (actual)	Output signal (ideal)	Error (% of span)

As-Left calibration table

Applied concentration	Output signal (actual)	Output signal (ideal)	Error (% of span)

$$\text{Error as \% of span} = \left(\frac{\text{Actual} - \text{Ideal}}{\text{Span}}\right)(100\%)$$

When finished calibrating your team's transmitter, be sure to place a calibration tag on it showing the range and the date it was calibrated. A set of calibration tags are shown here which you may cut out and tape to the transmitter after completing your calibration:

Cut out tag(s) with scissors, then affix to instrument(s) using transparent tape to show calibration:

CALIBRATED	CALIBRATED	CALIBRATED	CALIBRATED
By: _____ Date: _____	By: _____ Date: _____	By: _____ Date: _____	By: _____ Date: _____
Range:_____	Range:_____	Range:_____	Range:_____

Each student, however, must individually re-range the transmitter and the receiving instrument (indicator, controller, and/or recorder). Re-ranging an analyzer is usually done using a keypad and display on the transmitter unit, following the manufacturer's instructions. Each student's ranging is confirmed by the instructor by applying a random chemical concentration to the sensing element and verifying that the indicating controller reads the same (to within ± 1% of span).

Common mistakes:

- Choosing a calibration ("trim") range that is substantially less than the final range of measurement when installed. As a general rule, you should trim the sensor of the transmitter to cover the broadest range of measurement possible with your calibration equipment.
- Neglecting to place a calibration tag on the transmitter after "trimming" it.

Trimming and individually ranging your transmitter should take no more than one full lab session (3 hours) if the team is working efficiently!

Notes on instrument ranging

An important configuration parameter for any practical measurement or control system is *process variable ranging*. This entails setting both the transmitter and indicator/controller to a specified measurement range, with the controller indicating the process variable in real "engineering units" (e.g. PSI or degrees F rather than just percent). The following tutorial describes how this works and which configuration parameters to modify in a variety of different control systems found in the Instrumentation lab room.

The reason this is an issue at all is because loop controllers operating on 4-20 mA analog signals don't "know" what those signals are supposed to represent unless someone configures the controller with the proper range reflecting real-world conditions. For example, if a student is assigned a temperature transmitter with a range of 300 to 800 degrees Fahrenheit, not only does the transmitter have to output 4 mA when sensing 300 ^{o}F and output 20 mA when sensing 800 ^{o}F, but the controller must display an indication of 300 ^{o}F when it receives a 4 mA signal from the transmitter, and display an indication of 800 ^{o}F when it receives a 20 mA signal from the transmitter. None of this happens on its own – the student must range the transmitter for 300-800 ^{o}F input (and 4-20 mA output) as well as range the controller to display 300-800 ^{o}F over its 4-20 mA input scale. A typical loop is shown here with all instrument ranges displayed:

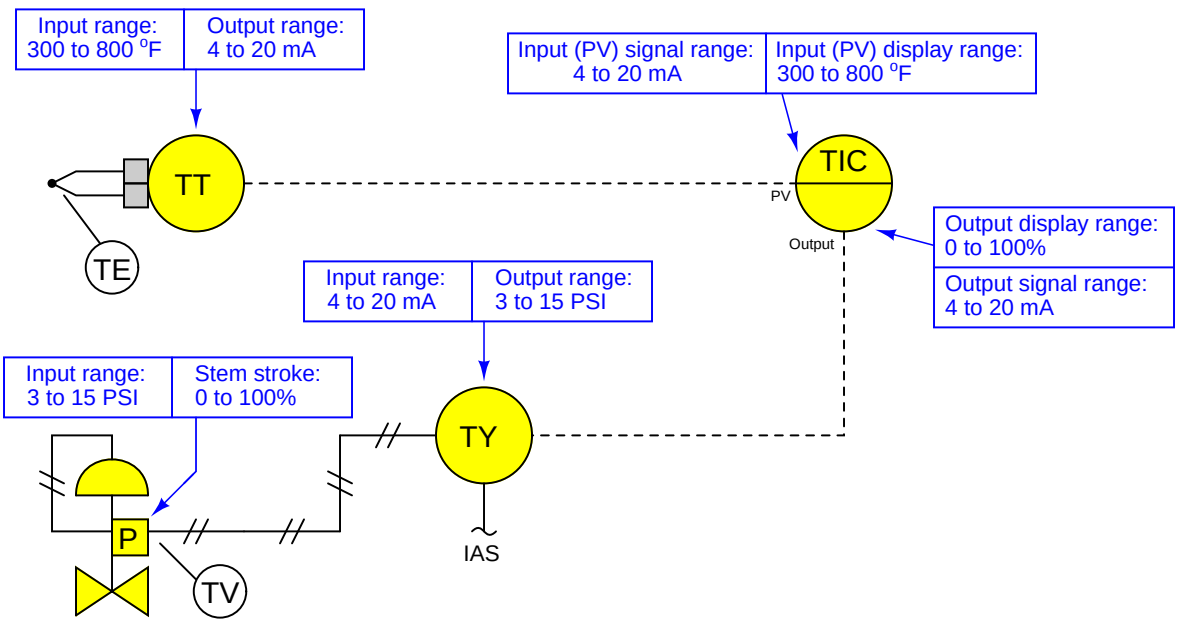

Analog (non-"smart") transmitters, I/P transducers, and valve positioners are ranged using "zero" and "span" adjustments, typically screws or nuts. The ranging of analog instruments is discussed in the "Instrument Calibration" chapter of the *Lessons In Industrial Instrumentation* textbook.

Digital ("smart") transmitters and valve positioners are ranged by setting LRV and URV parameters using a "communicator" device or a personal computer equipped with the appropriate interface and software. This too is discussed in the "Instrument Calibration" chapter of the *Lessons In Industrial Instrumentation* textbook.

Digital electronic loop controllers contain parameters specifying the process variable (PV) ranges. The following page lists examples of PV range configuration parameters for several different makes and models of loop controllers.

- Siemens/Moore 352 controller: process variable range parameters are located in the "Operator's Display" function block (FB15):
  → LRV = *Process Lo*
  → URV = *Process Hi*

- Siemens/Moore 352P and 353 controller: process variable range parameters are located in the "Analog Input" function block (AIN):
  → LRV = *Minscale*
  → URV = *Maxscale*

- Emerson DeltaV DCS: process variable range parameters are located in the "Analog Input" function block (AI) and "PID" function block (PID):
  → (AI block) = the *OUT_SCALE* parameter contains both high and low range limits, engineering units (e.g. deg F), and decimal point position. The *L_Type* parameter needs to be set to "indirect" to allow scaling to occur ("direct" mode prohibits scaling), and the *XD_Scale* parameter needs to be ranged 0 to 100%. Note that the "direct" and "indirect" options for *L_Type* have absolutely nothing to do with "direct" and "reverse" PID controller action, which is configured elsewhere.
  → (PID block) = the *PV_SCALE* parameter contains both high and low range limits, engineering units (e.g. deg F), and decimal point position. Note: the PID block's *PV_SCALE* range must exactly match the *OUT_SCALE* range of the AI block!

- Honeywell UDC 2500 controller: process variable input #1 range parameters are located in the "Input 1" set-up group of parameters:
  → LRV = *IN1 LO*
  → URV = *IN1 HI*

- Automation Direct "SOLO" controller: process variable range parameters are located in the following registers:
  → LRV = *P3-4 Input Range Low*
  → URV = *P3-3 Input Range High*

- Allen-Bradley PLC5, SLC500, and MicroLogix controllers: process variable scaling parameters are typically located either in a "Scale" instruction (SCL) or a "Scale with Parameters" instruction (SCP). In either case, the instruction takes the raw count value from the input channel's analog-to-digital converter and scales it into the desired process variable display range. A YouTube video on our BTCInstrumentation channel shows how to do this for the networked MicroLogix PLCs in the lab using the SCP instruction. *Note: SCP instruction parameters may be edited online. For this reason, downloading edits is not necessary for the MicroLogix PLCs in our lab. In fact, it is very important that you <u>not</u> save or download the PLC program, because doing so may alter the PLC's network address and lead to communication problems. Just make the changes while the PLC is in "Run" mode and then exit the program*:
  → (SCL instruction) = *Rate* and *Offset* values scale the signal according to the slope-intercept formula $y = mx + b$, where *Rate* is $10000m$ and *Offset* is b
  → (SCP instruction LRV) = *Scaled Min.*
  → (SCP instruction URV) = *Scaled Max.*

- Allen-Bradley Logix5000 controller: process variable scaling parameters are located in the "PID" instruction (PID):
  → LRV = *.MINS*
  → URV = *.MAXS*

- caSCADA "`pid`" control program: process variable scaling parameters are located in one of the source code files which must be modified using a text editor program, then recompiling the `pid` program so the new parameters may take effect. This control program may be initiated from the Linux command line by typing `./pid` and pressing the Enter key, after which a set of instructions will appear on the screen showing the default LRV and URV range values, and which file to find these parameters within. After editing and saving this file, you will need to type `make` at the Linux command line and press Enter to recompile the program. Finally, type `./pid` and press Enter to initiate the recompiled program.
  → LRV = *pid[0].LRV*
  → URV = *pid[0].URV*

file `ranging`

Lab Exercise – troubleshooting

The most important aspect of this lab exercise is *troubleshooting*, where you demonstrate your ability to logically isolate a problem in the system. All troubleshooting must be done on a system you did not help build, so that you must rely on others' documentation to find your way around the system instead of from your own memory of building it. Each student is given a limited amount of time to identify both the location and nature of the fault. All troubleshooting activities must be proctored by the instructor to assess proper diagnostic reasoning and technique.

The standard procedure involves a group of no more than four students troubleshooting the same faulted system, with the builders of that system playing the role of operators. All troubleshooters are given a two-minute period to individually identify a plausible fault based on observable symptoms and submit it in writing to the instructor for assessment. Those students whose faults are indeed plausible advance to the next round, where each one takes turns making diagostic tests on the system. One minute is given to each student for devising this test, but no time limit is placed on the execution of that test. Whenever someone decides enough data has been collected to pinpoint the location and nature of the fault, they declare to have reached a conclusion and submit to the instructor in writing for assessment.

Individual troubleshooting with a five-minute time limit is also an acceptable format, but this generally only works with small class sizes.

Failure to correctly identify both the general location and nature of the fault within the allotted time, and/or failing to demonstrate rational diagnostic procedure to the supervising instructor will disqualify the effort, in which case the student must re-try with a different fault. Multiple re-tries are permitted with no reduction in grade.

A standard multimeter is the only test equipment allowed during the time limit. No diagnostic circuit breaks are allowed except by instructor permission, and then only after correctly explaining what trouble this could cause in a real system.

The instructor will review each troubleshooting effort after completion, highlighting good and bad points for the purpose of learning. Troubleshooting is a skill born of practice and failure, so do not be disappointed in yourself if you must make multiple attempts to pass! One of the important life-lessons embedded in this activity is how to deal with failure, because it *will* eventually happen to you on the job! There is no dishonor in failing to properly diagnose a fault after doing your level best. The only dishonor is in taking shortcuts or in giving up.

Common mistakes:

- Attempting to *visually* locate the fault.
- Neglecting to take measurements with your multimeter.
- Neglecting to check other measurements in the system (e.g. pressure gauge readings).
- Incorrectly interpreting the loop diagram (e.g. thinking you're at the wrong place in the system when taking measurements).
- Incorrect multimeter usage (e.g. AC rather than DC, wrong range, wrong test lead placement). This is especially true when a student comes to lab unprepared and must borrow someone else's meter that is different from theirs!

The purpose of every troubleshooting exercise is to foster and assess your ability to intelligently diagnose a complex system. Finding the fault by luck, or by trial-and-error inspection, is no demonstration of skill. Competence is only revealed by your demonstrated ability to logically analyze and isolate the problem, correctly explaining all your steps!

Troubleshooting takes a lot of lab time, usually at least two 3-hour lab sessions for everyone in a full class to successfully pass. Budget for this amount of time as you plan your work, and also be sure to take advantage of your freedom to observe others as they troubleshoot.

Lab Exercise – decommissioning and clean-up

The final step of this lab exercise is to decommission your team's entire system and re-stock certain components back to their proper storage locations, the purpose of which being to prepare the lab for the next lab exercise. Remove your system documentation (e.g. loop diagram) from the common holding area, either discarding it or keeping it for your own records. Also, remove instrument tag labels (e.g. FT-101) from instruments and from cables. Perform general clean-up of your lab space, disposing of all trash, placing all tools back in their proper storage locations, sweeping up bits of wire off the floor and out of junction boxes, etc.

Leave the following components in place, mounted on the racks:

- Large control valves and positioners
- I/P transducers
- Large electric motors
- Large variable-frequency drive (VFD) units
- Cables inside conduit interconnecting junction boxes together
- Pipe and tube fittings (do not unscrew pipe threads)
- Supply air pressure regulators

Return the following components to their proper storage locations:

- Sensing elements (e.g. thermocouples, pH probes, etc.)
- Process transmitters
- "Jumper" cables used to connect terminal blocks within a single junction box
- Plastic tubing and tube fittings (disconnect compression-style tube fittings)
- Power cables and extension cords
- Adjustment (loading station) air pressure regulators

Finally, you shall return any control system components to their original (factory default) configurations. This includes controller PID settings, function block programs, input signal ranges, etc.

Lab Exercise – team tool locker inspection

The instructor will work with each team to inspect their tool locker for all required items, and also to ensure nothing else is being stored there.

First, the locker will be entirely emptied. Next, the instructor will inspect each tool before placing it in the locker, following the order of the inventory list taped to the inside of the locker door. The team is responsible for finding or replacing any missing items. Any items not on the inventory list will be left out of the locker.

Any damaged or worn components will be replaced. Inexpensive items such as drill bits and taps will be replaced at student expense. More expensive items will be replaced at the school's expense, with students doing research to identify the replacement cost of the item(s) in question.

file i01294

Sample Loop Diagram (using a single-loop controller)

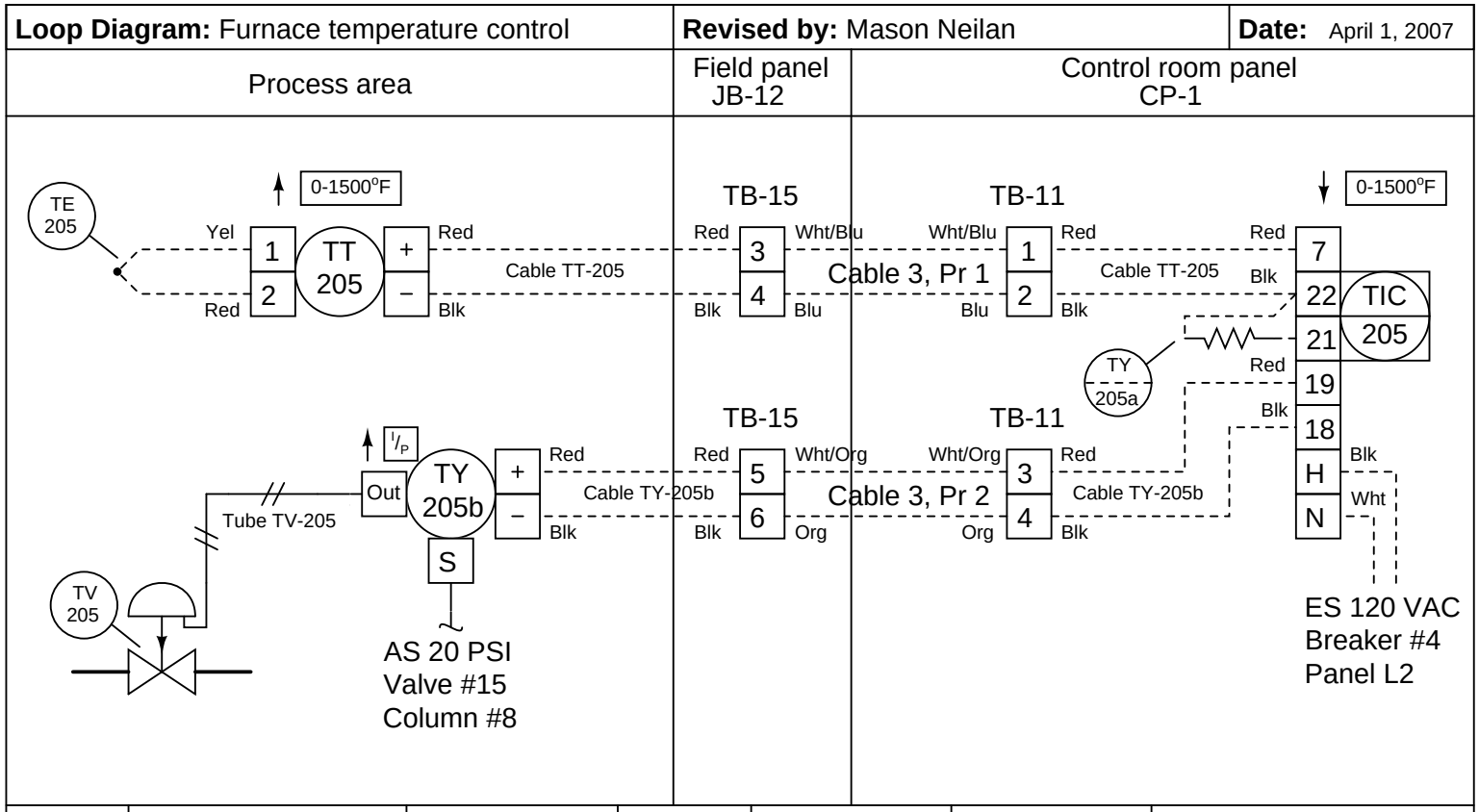

Tag #	Description	Manufacturer	Model	Input range	Output range	Notes
TE-205	Thermocouple	Omega			Type K	Ungrounded tip
TT-205	Temperature transmitter	Rosemount	444	0-1500° F	4-20 mA	Upscale burnout
TY-205a	Resistor	Vishay			250 Ω	
TIC-205	Controller	Siemens	PAC 353	1-5 V	0-1500° F	Reverse-acting control
TY-205b	I/P transducer	Fisher	546	4-20 mA	3-15 PSI	
TV-205	Control valve	Fisher	Easy-E	3-15 PSI	0-100%	Fail-closed

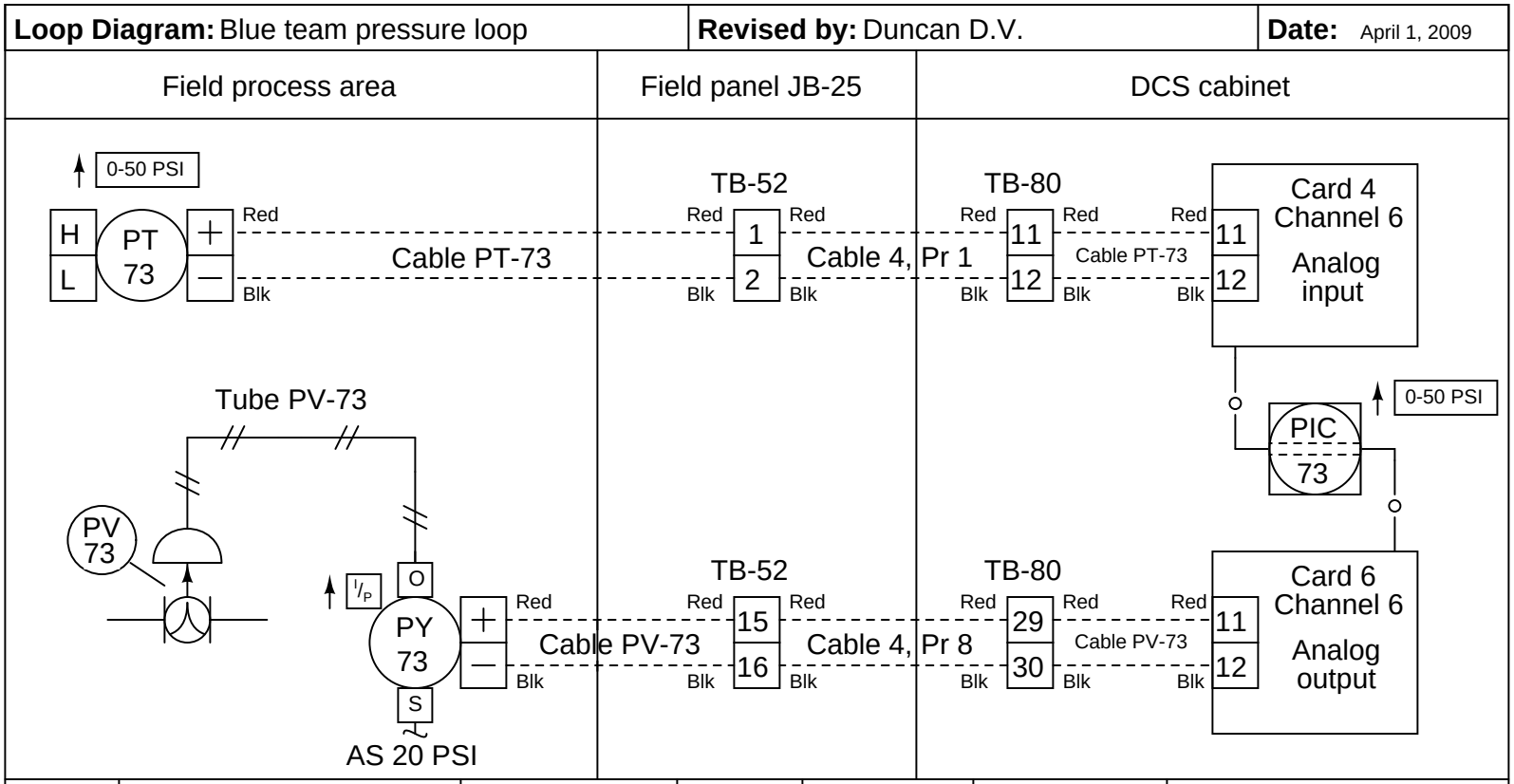

Tag #	Description	Manufacturer	Model	Input range	Output range	Notes
PT-73	Pressure transmitter	Rosemount	3051CD	0-50 PSI	4-20 mA	
PIC-73	Controller	Emerson	DeltaV	4-20 mA	4-20 mA	HART-enabled input Direct-acting control
PY-73	I/P transducer	Fisher	846	4-20 mA	3-15 PSI	
PV-73	Control valve	Fisher	Vee-ball	3-15 PSI	0-100%	Fail-open

Loop Diagram: Sludge tank level control | **Revised by:** I. Leaky | **Date:** April 1, 2008

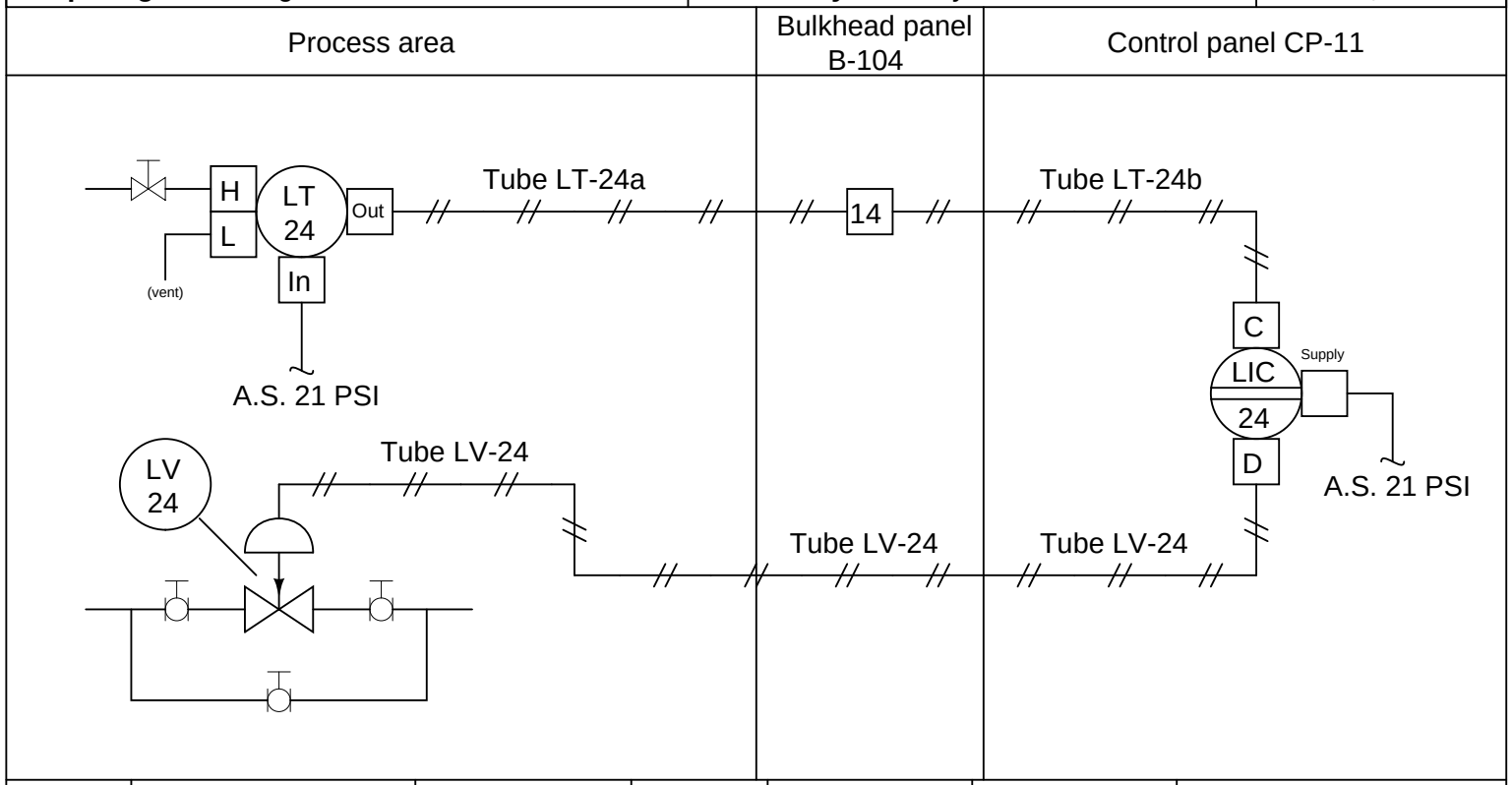

Tag #	Description	Manufacturer	Model	Input range	Output range	Notes
LT-24	Level transmitter	Foxboro	13A	25-150 "H_2O	3-15 PSI	
LIC-24	Controller	Foxboro	130	3-15 PSI	3-15 PSI	
LV-24	Control valve	Fisher	Easy-E / 667	3-15 PSI	0-100%	Fail closed

Loop Diagram: Unit feed flow control | **Revised by:** A. Bradley | **Date:** April 1, 2013

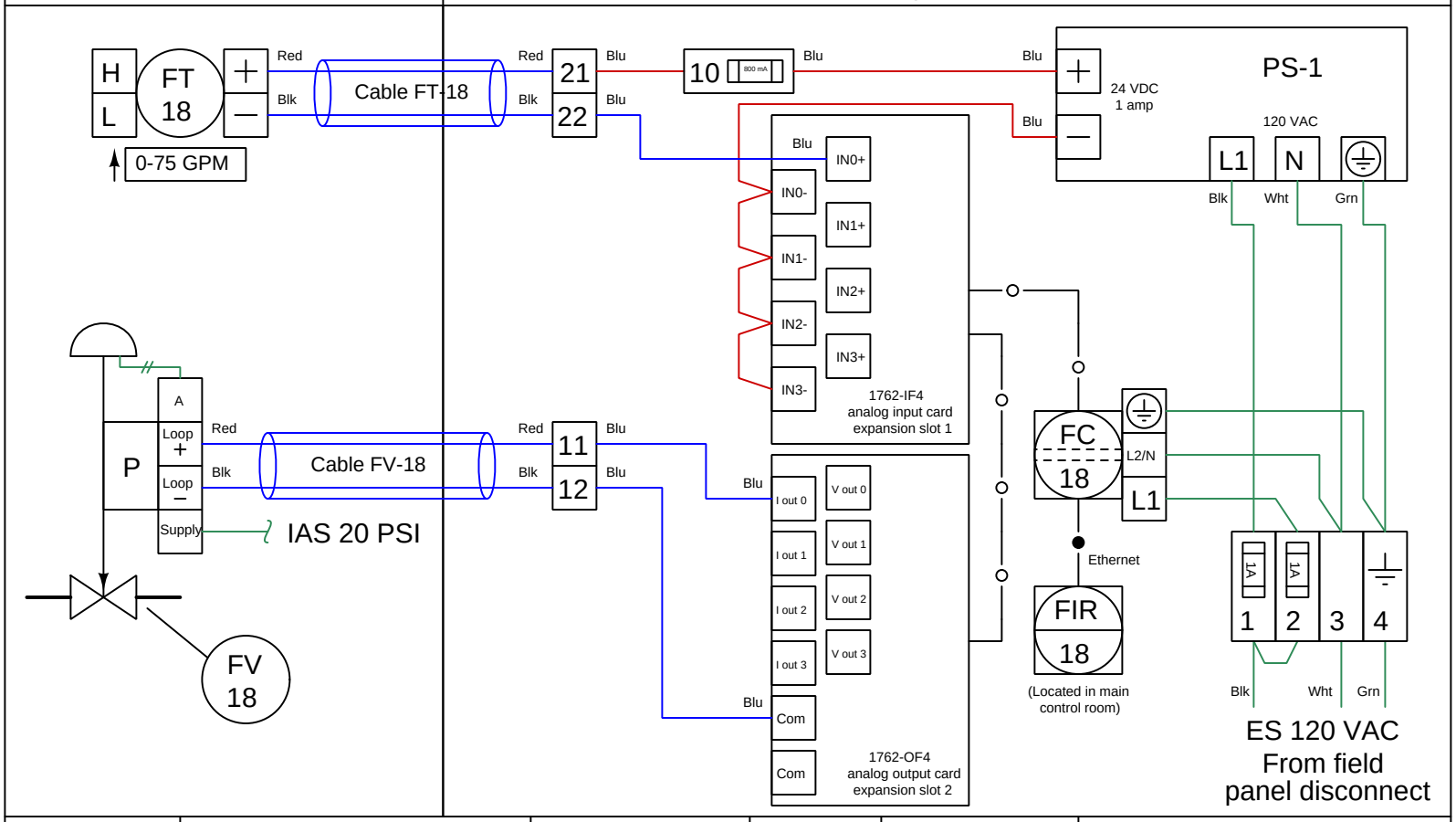

Tag number	Description	Manufacturer	Model	Calibration	Notes
FT-18	Flow transmitter	Rosemount	3051S	0-100" WC input 4-20 mA output	Square-root characterization
FC-18	PLC	Allen-Bradley	ML1100	1762-IF4 input 4-20 mA 1762-OF4 output 4-20 mA	IP = 169.254.10.9 Mask = 255.255.0.0
FIR-18	HMI touch-panel	AutomationDirect	C-More		
FV-18	Flow valve with positioner	Fisher	ED / 667 DVC6010	4 mA = fully closed 20 mA = fully open	Fail-closed

Lab Exercise – loop diagram and system inspection

Each team's system will undergo an inspection simulaneous with inspection of each team member's loop diagram. Team members will exchange diagrams with each other and then verify from those diagrams what the instructor sees when inspecting each and every panel and connection. *Please note that the "Lessons In Industrial Instrumentation" textbook describes good practices for construction and documentation.*

Construction Standards

- All construction must be *safe* (i.e. must not pose any unnecessary hazard to students or visitors). This includes electrical, chemical, thermal, pressure, and general safety hazards (e.g. trip hazards, cut hazards). *Unsafe construction will be dismantled upon discovery.*
- All electrical sources greater than 30 volts must be overcurrent-protected and all related wire connections must be guarded against accidental contact (e.g. use recessed terminals with no exposed metal).
- Proper use of colors for electrical power source wiring (e.g. red and black for DC + and −, black and white for AC "hot" and "neutral", green for earth ground).
- All metallic electrical enclosures must be bonded to earth ground for safety.
- Proper wire types and attachment to terminals (e.g. appropriate wire gauge for the expected current, use of stranded wire wherever possible, correct terminals crimped to ends of wires, no stray wire strands at any point).
- Attached wires must withstand being lightly pulled with fingers.
- Wire insulation must be intact (i.e. no bare wires anywhere).
- Panel wiring must be neat in appearance (e.g. all cables run directly from terminal block to nearest wire duct, with all excess wire length tucked inside wire duct).
- Wiring outside of panels should be run through conduit wherever possible.
- Correct tools must be used at all times. This includes the use of fixed-size wrenches rather than adjustable wrenches whenever possible, box-end over open-end wrenches whenever possible, and the correct type and size of screwdriver used to turn screw heads.
- All electrical components must be located to avoid exposure to liquids.
- All tube and pipe connections must be properly made (e.g. correct "swaging" of tube ends, no over- or under-tightened fittings, Teflon tape or pipe sealant used on all NPT threads).
- All manual controls (e.g. buttons, handles, knobs) must be accessible and function without undue effort.

Documentation Standards

- Loop diagrams must be drawn in accordance with ISA standard 5.1.
- Each instrument must have an appropriate ISA-standard tag name, and this tag name must be visible on the actual instrument (e.g. written on masking tape and attached to the instrument).
- Each signal cable and each signal tube must have an identifying label documented and attached. Long cables must be labeled at each end, as close to the termination points as practical.
- Each team must have its own unique loop number.
- Each instrument's (final) calibrated range must be shown.
- Each control valve's fail mode (e.g. fail-open, fail-closed) or action must be shown.
- All writing must be legible (i.e. easy for anyone to read). *Hint: large-format paper helps!*
- All instrument symbols must be appropriate to the device, function, and location. The large white-colored control panel and the DCS operator stations constitute the *main control room*. All electrical enclosures in the lab room are *auxiliary* locations, and everything else is considered a *field* location.
- Instrument functions shared within a common device must be represented by the "shared" symbol on the diagram (e.g. a controller that is part of a multi-loop control system such as a DCS). Shared controllers must have their identifying loop noted on the diagram (e.g. DCS South Loop #23).
- Any controller I/O cards must be labeled with slot number and channel number in addition to terminal numbers.

- Each location (e.g. field, junction box, control room) must be clearly delineated with vertical seperation lines on the diagram.
- Each diagram must be sufficiently detailed so that no other student will have difficulty locating components (e.g. *"Where is the controller for this loop?"*) or determining important configuration parameters (e.g. range settings).

Sample diagrams are provided in this worksheet (immediately following the lab exercise documentation), and each student is urged to use these sample diagrams as references when drafting their own. The "Lessons In Industrial Instrumentation" textbook also describes ISA-standard documentation practices.

Common mistakes:

- Incorrect tag name format, using letters that do not conform to the ISA 5.1 standard (e.g. including "PLC" or "DCS" in a controller's tag name).
- Forgetting that every instrument's tag name in a loop must begin with the same letter, and that this first letter represents the process variable being measured/controlled.
- Forgetting to label all field instruments with their own tag names (e.g. AT-83).
- Failing to label termination points (e.g. terminal block screws) *exactly* as they are labeled in real life.
- Poor use of space on the diagram paper, causing some portions of the diagram to become "crowded" rather than all components being evenly spaced. *Hint: begin your diagram by sketching the field instrument at the far left of the paper and the control room instrument at the far right of the paper, then draw all other instruments and connections in between!*
- Forgetting to label all signal wires (see example loop diagrams).
- Forgetting to note all wire colors.
- Forgetting to put your name on the loop diagram!
- Leaving junction box cables outside of wire duct, looking messy.
- Leaving wire duct covers off.
- Basing your diagram off of a team-mate's diagram, rather than closely inspecting the system for yourself.
- Not placing loop sheet instruments in the correct orientation (field instruments on the left, control room instruments on the right).

Creating and inspecting accurate loop diagrams should take no more than one full lab session (3 hours) if the team is working efficiently!

file i00654

Question 93

Capstone Assessment (end of quarter)

This performance assessment tests your mastery of many important instrumentation concepts. You are to automate a pre-built process based on prototype diagrams you sketch of all instrument connections, and demonstrate the automatic control of this process. All this must be done individually with no assistance from anyone else, within one continuous time block not to exceed three hours. You may refer to manufacturer documentation and/or textbooks, but not to personal notes, while building your loop.

You are entirely responsible for figuring out how the process works and what you must do to control it, based on your inspection of it after it has been selected for you. This includes identifying the process variable, the final control element, any loads, instrument model numbers, and locating manufacturer's documentation for the instrumentation.

You may perform the assessment activity at any time in the quarter. Successful completion counts as the "mastery" portion of the course exam(s). There will be no grade penalty for repeated attempts, however successful completion of this activity is required to pass the course.

In addition to exhibiting a steady-state control in automatic mode (i.e. the process variable follows changes made to the setpoint and settles at or near the setpoint value without oscillation after some time), the process must also meet the following criteria based on courses you have completed:

- If you have passed or are currently taking the *INST241* course, your transmitter and controller must be properly configured to register the process variable (in engineering units, not percent) over a range specified by the instructor. Note: if the transmitter is analog rather than "smart," the instructor will have you determine its "As-Found" range and direct you to range the loop controller to match the transmitter rather than calibrate the analog transmitter to a specified range.
- If you have passed or are currently taking the *INST252* course, the controller must be tuned for robust response to perturbations (changes) in either setpoint or load as selected by the instructor at or near a setpoint value also specified by the instructor. "Robust" control is defined here as the controller compensating for perturbations as quickly as possible without creating any process variable oscillations (i.e. a *critically damped* response). It will be your decision to use P, I, D, or any combination thereof in the controller's tuning.
- If you have passed or are currently taking the *INST260* course, you must connect a data acquisition unit (DAQ) to record a variable in the process selected by the instructor and display a trend graph and/or a scaled representation of the measured variable on a personal computer networked to the DAQ. For example, if you are instructed to display the controller's output value using the DAQ, the display should register on a scale of 0% to 100% just like the controller's output is ranged from 0% to 100%. If the DAQ needs to show the process variable, it must register that variable in the same range as the transmitter. If your DAQ provides a trend graph, the vertical scale markings of that trend graph must be similarly ranged.

Given the time constraint of this assessment, you will not be required to cut and fit flexible conduit to the field instruments. All other wiring must be neatly installed so as to avoid creating safety hazards (tripping, etc.) and confusion for other students assembling their loops.

Limited availability of components and physical space in the lab means that only a few students will be able to work on this assessment at once, so plan on attempting this *well before* the final due date!

Capstone assessment check-list (listed in sequential order) Name: _____

Bring a printed copy of this check-list with you when beginning the capstone assessment! Remember that you must work independently once the instructor assigns you a vest to wear. Any consultation with classmates, use of personal notes, or deviation from your approved diagram(s) will result in immediate disqualification, which means you must take everything apart and re-try the capstone assessment on a different process. Any damage done to the process or instrumentation will similarly result in disqualification, and you must repair the damage prior to re-trying the capstone assessment. You are allowed to use manufacturer documentation, as well as any documentation provided by the instructor (e.g. textbooks).

No teamwork is allowed while wearing the vest!

Selection	**(Instructor writes/checks)**
Instructor assigns a vest for you to wear	
Instructor selects a process for you to automate	
Instructor selects process variable range (*INST241 only*)	
Instructor selects setpoint/load & SP value (*INST252 only*)	@ SP =
Instructor selects DAQ variable to measure (*INST260 only*)	
Instructor selects controller – **label with your name!**	
Instructor verifies no wiring connected to the process	

The time clock starts now! **Start time:** _____

Criterion	**(Instructor verifies)**
You sketch basic loop diagram – instructor verifies correctness	
You sketch DAQ connection diagram – instructor verifies correctness	

Now you may begin wiring and configuring the components

Criterion	**(Instructor verifies)**
Steady-state control in automatic mode	
Controller correctly registers the process variable (*INST241 only*)	
Controller responds robustly to perturbations (*INST252 only*)	
DAQ measurement correctly scaled and/or graphed (*INST260 only*)	

The time clock stops now! **Stop time:** _____

Criterion	**(Instructor verifies)**
Instructor verifies all signal wires/tubes disconnected	
Instructor verifies controller reset to original configuration	
Instructor verifies DAQ is returned to team tool locker	
Instructor collects your diagrams	

Your mastery score will not be recorded until all steps are complete!

Notes on instrument ranging

An important configuration parameter for any practical measurement or control system is *process variable ranging*. This entails setting both the transmitter and indicator/controller to a specified measurement range, with the controller indicating the process variable in real "engineering units" (e.g. PSI or degrees F rather than just percent). The following tutorial describes how this works and which configuration parameters to modify in a variety of different control systems found in the Instrumentation lab room.

The reason this is an issue at all is because loop controllers operating on 4-20 mA analog signals don't "know" what those signals are supposed to represent unless someone configures the controller with the proper range reflecting real-world conditions. For example, if a student is assigned a temperature transmitter with a range of 300 to 800 degrees Fahrenheit, not only does the transmitter have to output 4 mA when sensing 300 ^{o}F and output 20 mA when sensing 800 ^{o}F, but the controller must display an indication of 300 ^{o}F when it receives a 4 mA signal from the transmitter, and display an indication of 800 ^{o}F when it receives a 20 mA signal from the transmitter. None of this happens on its own – the student must range the transmitter for 300-800 ^{o}F input (and 4-20 mA output) as well as range the controller to display 300-800 ^{o}F over its 4-20 mA input scale. A typical loop is shown here with all instrument ranges displayed:

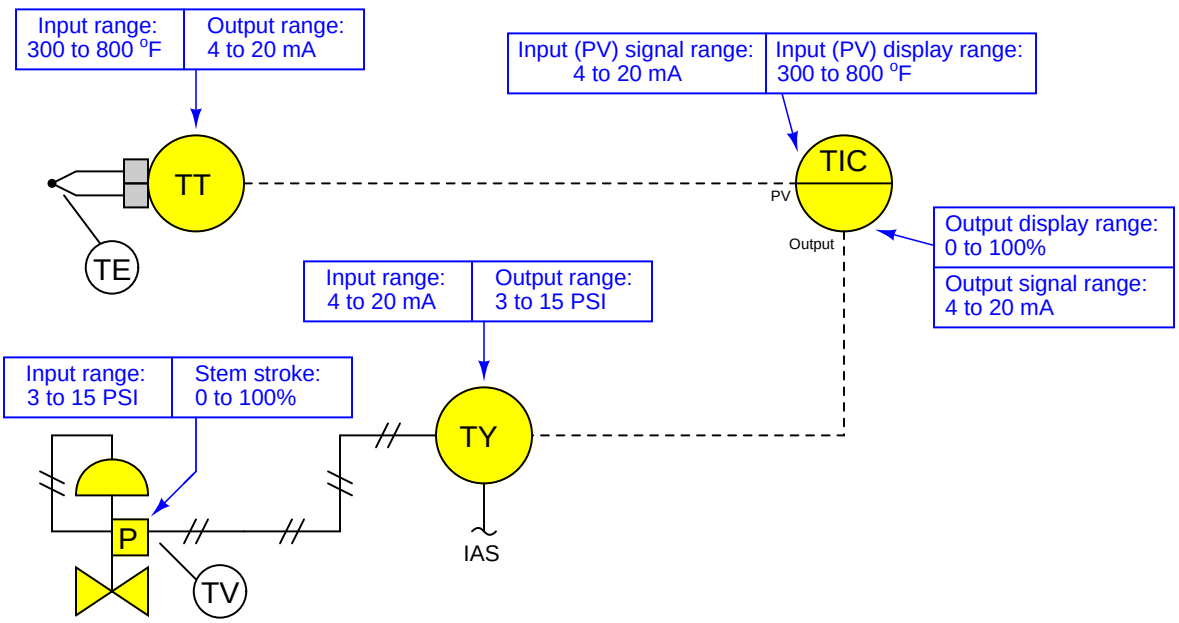

Analog (non-"smart") transmitters, I/P transducers, and valve positioners are ranged using "zero" and "span" adjustments, typically screws or nuts. The ranging of analog instruments is discussed in the "Instrument Calibration" chapter of the *Lessons In Industrial Instrumentation* textbook.

Digital ("smart") transmitters and valve positioners are ranged by setting LRV and URV parameters using a "communicator" device or a personal computer equipped with the appropriate interface and software. This too is discussed in the "Instrument Calibration" chapter of the *Lessons In Industrial Instrumentation* textbook.

Digital electronic loop controllers contain parameters specifying the process variable (PV) ranges. The following page lists examples of PV range configuration parameters for several different makes and models of loop controllers.

- Siemens/Moore 352 controller: process variable range parameters are located in the "Operator's Display" function block (FB15):
  → LRV = *Process Lo*
  → URV = *Process Hi*

- Siemens/Moore 352P and 353 controller: process variable range parameters are located in the "Analog Input" function block (AIN):
  → LRV = *Minscale*
  → URV = *Maxscale*

- Emerson DeltaV DCS: process variable range parameters are located in the "Analog Input" function block (AI) and "PID" function block (PID):
  → (AI block) = the *OUT_SCALE* parameter contains both high and low range limits, engineering units (e.g. deg F), and decimal point position. The *L_Type* parameter needs to be set to "indirect" to allow scaling to occur ("direct" mode prohibits scaling), and the *XD_Scale* parameter needs to be ranged 0 to 100%. Note that the "direct" and "indirect" options for *L_Type* have absolutely nothing to do with "direct" and "reverse" PID controller action, which is configured elsewhere.
  → (PID block) = the *PV_SCALE* parameter contains both high and low range limits, engineering units (e.g. deg F), and decimal point position. Note: the PID block's *PV_SCALE* range must exactly match the *OUT_SCALE* range of the AI block!

- Honeywell UDC 2500 controller: process variable input #1 range parameters are located in the "Input 1" set-up group of parameters:
  → LRV = *IN1 LO*
  → URV = *IN1 HI*

- Automation Direct "SOLO" controller: process variable range parameters are located in the following registers:
  → LRV = *P3-4 Input Range Low*
  → URV = *P3-3 Input Range High*

- Allen-Bradley PLC5, SLC500, and MicroLogix controllers: process variable scaling parameters are typically located either in a "Scale" instruction (SCL) or a "Scale with Parameters" instruction (SCP). In either case, the instruction takes the raw count value from the input channel's analog-to-digital converter and scales it into the desired process variable display range. A YouTube video on our BTCInstrumentation channel shows how to do this for the networked MicroLogix PLCs in the lab using the SCP instruction. *Note: SCP instruction parameters may be edited online. For this reason, downloading edits is not necessary for the MicroLogix PLCs in our lab. In fact, it is very important that you <u>not</u> save or download the PLC program, because doing so may alter the PLC's network address and lead to communication problems. Just make the changes while the PLC is in "Run" mode and then exit the program*:
  → (SCL instruction) = *Rate* and *Offset* values scale the signal according to the slope-intercept formula $y = mx + b$, where *Rate* is $10000m$ and *Offset* is b
  → (SCP instruction LRV) = *Scaled Min.*
  → (SCP instruction URV) = *Scaled Max.*

- Allen-Bradley Logix5000 controller: process variable scaling parameters are located in the "PID" instruction (PID):
  → LRV = *.MINS*
  → URV = *.MAXS*

- caSCADA "`pid`" control program: process variable scaling parameters are located in one of the source code files which must be modified using a text editor program, then recompiling the `pid` program so the new parameters may take effect. This control program may be initiated from the Linux command line by typing `./pid` and pressing the Enter key, after which a set of instructions will appear on the screen showing the default LRV and URV range values, and which file to find these parameters within. After editing and saving this file, you will need to type `make` at the Linux command line and press Enter to recompile the program. Finally, type `./pid` and press Enter to initiate the recompiled program.
  → LRV = *pid[0].LRV*
  → URV = *pid[0].URV*

Notes on controller action

An important set of configuration parameters for any control system are *controller action* and *PID tuning*. Proper controller action means that the control system reacts to setpoint changes and process variable disturbances in the correct direction (e.g. a temperature control system that acts to reduce heat input when the process variable is above setpoint). Proper PID tuning means that the control system reacts to setpoint changes and process variable disturbances to an appropriate degree over time (e.g. a temperature control system that applies the right amount of additional heat input when the process variable goes below setpoint). A controller with the wrong action will cause a process to "run away" to one extreme value or the other. A controller with poor PID tuning will fail to achieve setpoint, and/or oscillate needlessly. The following is a list of configuration parameters to modify in a variety of different control systems found in the Instrumentation lab room.

If the controller happens to be programmed using function blocks, these important parameters will be found in the "PID" function block. For other controller models, there will be a menu option with action (direct/reverse) and tuning (P/I/D) parameters. Note that some controllers provide a quick-access feature to edit the PID tuning parameters, but generally not for changing the direction of action. Here are some examples:

- Siemens/Moore 352 controller: control action parameters are located in the "PID" function block (FB13). Note that the P, I, and D tuning parameters may be quickly accessed by pressing the "Tune" button rather than by entering the PID function block edit menu:
  → Direction (Direct/Reverse)= *SA1*
  → Proportional (P) = *SPG1* as a unitless gain value
  → Integral (I) = *STI1* in units of minutes per repeat
  → Derivative (D) = *STD1* in units of minutes

- Siemens/Moore 352P and 353 controller: control action parameters are located in the "PID" function block (PID). Note that the P, I, and D tuning parameters may be quickly accessed by pressing the "Tune" button rather than by entering the PID function block edit menu:
  → Direction (Direct/Reverse)= *DIR ACT*
  → Proportional (P) = *PG* as a unitless gain value
  → Integral (I) = *TI* in units of minutes per repeat
  → Derivative (D) = *TD* in units of minutes

- Emerson DeltaV DCS: control action parameters are located in the "PID" function block (PID) conforming to the FOUNDATION Fieldbus standard:
  → Direction (Direct/Reverse)= Found in the *CONTROL_OPTS* set of parameters as a "check-box" where a checked box sets direct action and an unchecked box sets reverse action.
  → Proportional (P) = *GAIN* as a unitless gain value
  → Integral (I) = *RESET* in units of seconds per repeat
  → Derivative (D) = *RATE* in units of seconds

- Honeywell UDC 2500 controller: control direction is located in the "CONTRL" set-up group of parameters, while the PID tuning coefficients are located in the "TUNING" set-up group of parameters:
  → Direction (Direct/Reverse)= *Action*
  → Proportional (P) = *PB* or *Gain* as a proportional band percentage or as a unitless gain value, respectively
  → Integral (I) = *I Min* or *I RPM* in units of minutes or repeats per minute, respectively
  → Derivative (D) = *Rate T* in units of minutes

- Automation Direct "SOLO" controller: process variable range parameters are located in the following registers:
  → Direction (Direct/Reverse)= *P3-7 Heating/Cooling*
  → Proportional (P) = *P1-4 Proportional band* as a proportional band percentage
  → Integral (I) = *P1-5 Integral time* in units of seconds
  → Derivative (D) = *P1-6 Derivative time* in units of seconds

- Allen-Bradley PLC5, SLC500, and MicroLogix controllers: control action parameters are located in the "PID" instruction. A YouTube video on our BTCInstrumentation channel shows how to do this for the networked MicroLogix PLCs in the lab (reading the PV on the first analog input and sending the output to the first analog output of the I/O card):
  → Direction (Direct/Reverse)= Found in the *Control Mode* field where E=PV−SP represents direct action and E=SP−PV represents reverse action.
  → Proportional (P) = *Controller Gain* K_c as a unitless gain value
  → Integral (I) = *Reset* T_i in units of minutes per repeat
  → Derivative (D) = *Rate* T_d in units of minutes

- Allen-Bradley Logix5000 controller: control action parameters are located in the "PID" instruction (PID):
  → Direction (Direct/Reverse)= E where PV−SP represents direct action and SP−PV represents reverse action.
  → Proportional (P) = K_p or K_c as a unitless gain value
  → Integral (I) = K_i in units of seconds per repeat
  → Derivative (D) = K_d in units of minutes

- caSCADA "`pid`" control program: control action parameters are located on the operator interface screen, above the trend graph. This control program may be initiated from the Linux command line by typing `./pid` and pressing the Enter key. Once the `pid` control program is running (reading the PV on analog input AIN0 and sending the output to analog output DAC0 of the LabJack DAQ), each parameter may be selected by pressing the `S` key as often as needed, and the parameter values changed by pressing the arrow and page up/down keys. Note that the control direction may only be switched while the controller is in manual mode. Tuning parameters may be altered in either manual or automatic modes.
  → Direction (Direct/Reverse)= will either show "`Direct-acting`" or "`Reverse-acting`"
  → Proportional (P) = `K_P` as a unitless gain value
  → Integral (I) = `K_I` in units of repeats per minute
  → Derivative (D) = `K_D` in units of seconds

Notes on controller tuning

For those who have never tuned a controller before but need to set the PID parameters for basic loop stability in automatic mode, here are some tips for setting the P, I, and D parameter values. Every PID controller provides means to alter the tuning coefficients named *proportional* (also called *gain*), *integral* (also called *reset*), and *derivative* (also called *rate or pre-act*). Settings which are virtually assured to yield stable control are as follows:

- **P** – a "gain" value of less than one (i.e. a "proportional band" value of at least 100%).
- **I** – a "reset" value of zero repeats per minute, or the largest value possible for minutes per repeat.
- **D** – a "rate" value of zero.

Mind you, these parameters will not yield *good* control, but merely *stable* control. In other words, these tuning parameter values will make the controller fairly unresponsive, but at least it won't oscillate out of control. Also bear in mind that having an integral (reset) value set for minimum action (i.e. zero repeats per minute, or very high minutes per repeat) will result in a controller that never quite makes the process variable value reach setpoint – instead, there will be a persistent "offset" between PV and SP with integral action essentially turned off.

file `control`

file i00998

Answers

Answer 1

Answer 2

Answer 3

Answer 4

Hint: gasoline fuel molecules contain lots of *hydrogen* atoms!

Answer 5

I'll let you do the research here!

Answer 6

Answer 7

Answer 8

Answer 9

I'll let you do all the work on this question!

Answer 10

Note: the "Terms and Definitions" section of the "Chemistry" chapter in the *Lessons In Industrial Instrumentation* textbook is a good resource for helping to answer these questions.

A **particle** is a part of an atom, separable from the other portions only by levels of energy far in excess of chemical reactions.

An **atom** is the smallest unit of matter that may be isolated by chemical means.

An **element** is a substance composed of atoms all sharing the same number of protons in their nuclei (e.g. hydrogen, helium, nitrogen, iron, cesium, fluorine).

A **molecule** is the smallest unit of matter composed of two or more atoms joined by electron interaction in a fixed ratio (e.g. water: H_2O) – the smallest unit of a *compound*.

A **compound** is a substance composed of identical molecules (e.g. pure water).

A **mixture** is a substance composed of different atoms or molecules *not* electronically bonded to each other.

- One gram of perfectly pure water: **Compound**
- A proton: **Particle**
- Oxygen: **Atom**, **Molecule**, or **Element**, depending on context.
- Carbon dioxide (CO_2): **Molecule** or **Compound**, depending on context.
- A quark: **Particle**
- Gasoline: **Mixture**
- Air: **Mixture**
- Plutonium: **Atom** or **Element**, depending on context.

"Oxygen" may refer to a single atom, in which case it would be classified as an atom. However, oxygen is usually found in molecular form (pairs of oxygen atoms bound together: O_2), in which case a single atomic pair would be classified as a molecule. If the reference to "Oxygen" is the *type* of substance, it would be classified as an element.

Similar reasoning holds with Carbon dioxide and Plutonium. A single atom of Plutonium, of course, would be an atom. A single grouping of one Carbon atom (C) and two Oxygen atoms (O_2) would constitute one CO_2 molecule. If the reference to either Plutonium or Carbon dioxide were in regard to type, they would be classified as "element" and "compound," respectively.

Gasoline and Air are both mixtures, each substance composed of multiple types of molecules.

Answer 11

Protons and *neutrons* reside in the center (or *nucleus*) of an atom, a very dense core. *Electrons* reside in patterns surrounding the nucleus (many textbooks depict these patterns as orbits, like satellites orbiting a planet, but this model is not entirely accurate).

Protons and electrons are both electrically charged particles. Each proton has a positive electrical charge of 1 unit, while each electron has a negative electrical charge of 1 unit. Neutrons are electrically neutral, possessing no charge at all.

Shown here is the ranking of elementary particles according to mass, in order from lightest to heaviest:

- Electron (lightest)
- Proton
- Neutron (heaviest)

The number of protons in the nucleus of an atom determines that atom's *atomic number*, which determines its identity (what type of element it is).

The number of neutrons in the nucleus, added to the atomic number (the number of protons in the nucleus) constitutes the atom's *atomic weight*, also called *atomic mass*. This determines the gross mass of the atom, and may also determine some nuclear properties such as radioactivity.

The number of electrons surrounding the nucleus of an atom is ideally equal to the number of protons in the nucleus (atomic number), to balance the opposing electric charges. Extra electrons may surround an atom, though, giving it an overall negative electric charge. Electrons may be "robbed" from an atom as well, giving it an overall positive electric charge. The number and arrangement of electrons in an atom determine its chemical properties (reactivity with other atoms).

Since the base number of electrons is established by the number of protons, it is the atomic number that fundamentally determines an element's physical properties (reactivity, boiling point, freezing point, etc.). Adding or subtracting electrons to/from an atom also affects certain chemical properties, but not to the extent that the atomic number does.

Answer 12

For Carbon-12, "12" represents the atom's *atomic mass* (sum of protons and neutrons in the nucleus). Since the *atomic number* of Carbon is 6, we know there are 6 protons in the nucleus. Subtracting 6 from 12 leaves us with 6 neutrons in the nucleus as well. For the atom to be electrically neutral, there must be 6 electrons to balance the 6 protons.

For gold, the average *atomic mass* of 197 represents the sum of protons and neutrons in the nucleus. Since the *atomic number* of gold is 79, we know there are 79 protons in the nucleus. Subtracting 79 from 197 leaves us with 118 neutrons in the nucleus. For the atom to be electrically neutral, there must be 79 electrons to balance the 79 protons.

Answer 13

Physical forces, energy sources, and reactions common to everyday experience are insufficient to alter the *atomic number* (number of protons in the nucleus) of any atom, because of the extremely high binding force between nuclear particles. Thus, the chemical identity of elements remains extremely stable.

Chemical reactions are merely exchanges and interactions involving *electrons* between atoms, not protons or neutrons. Electrons are rather loosely bound around atoms compared to protons and neutrons, which explains why chemical changes may occur from simple physical processes such as heating and cooling, or exposure to light.

Three protons would have to be removed from an atom of lead ($_{82}$Pb) into gold ($_{79}$Au), and this would require the use of equipment such as particle accelerators. Although this is possible, it is not practical due to the extremely high cost (it takes more money to convert lead into gold than the gold is worth!).

Answer 14

The former symbol (H_2) represents two atoms of hydrogen (H) joined as a pair (a *diatomic* molecule). The latter symbol represents hydrogen with an atomic mass of 2, an isotope of hydrogen known as *deuterium*. In summary, the former symbol denotes a *chemical* state, while the latter symbol denotes a *nuclear* state.

Answer 15

An element is composed of extremely small indivisible particles called atoms. This is in agreement with modern theory, except that we now know atoms *can* be divided into smaller subcomponents (elementary particles), all of which are further divisible into yet smaller particles (quarks, etc.).

All atoms of a given element have identical properties, which differ from those of other elements. Isotopes have *slightly* different within the same element definition. For some elements such as hydrogen (H), the isotopic mass ratios are substantial (Tritium:Deuterium:Hydrogen mass ratios = 3:2:1). For most isotopes, though, the difference in mass is slight, and requires precision equipment to differentiate. Certainly in Dalton's time there was no equipment capable of detecting much less measuring these differences in isotope mass.

Atoms cannot be created, destroyed, or transformed into atoms of another element. Modern scientists would agree that *matter* cannot be created or destroyed, but may be converted between different forms (including energy!). Atoms most certainly can be *transmutated* into different elements. In nature, though, this happens on such a small scale as to be virtually unmeasurable, and it may only be synthesized on a large scale by apparatus unavailable to scientists in Dalton's time.

Compounds are formed when atoms of different elements combine with each other in small whole-number ratios. This is in perfect agreement with modern atomic theory, and in fact is an excellent definition of what a "compound" is.

The relative numbers and kinds of atoms are constant in a given compound. Again, this is in perfect agreement with modern theory.

Answer 16

A chemical *solution* is a stable and homogeneous mixture (at the molecular level) of two or more substances. *Solute* refers to the minor substance(s) and *solvent* refers to the major substance in which the solute(s) is/are dissolved.

In many cases, the identity of solute and solvent is arbitrary, as in the case of a 50/50 alcohol/water solution. Often, the solute is normally a gas or a solid, and the solvent is a liquid into which the gas(es) and/or solid(s) dissolve. However, other combinations are possible.

An example where both the solute(s) and solvent are gaseous is air. Here, nitrogen would be classified as the solvent, since it is the predominant substance. Oxygen, carbon dioxide, helium, and the rest of the "lesser" gases would be considered solutes.

Examples where the solute is a gas and the solvent is a liquid include ammonia in water, acetylene in acetone, and nitrogen in blood.

An example where the solute is a gas and the solvent is a solid is hydrogen dissolved in palladium metal.

Examples where both the solute(s) and the solvent are liquids include alcohol in water and many metal alloys in their molten states.

A class of solutions where the solute is a liquid and the solvent is a solid are called *amalgams*. One kind of amalgam is mercury (solute) dissolved in silver (solvent), used in dental fillings.

Examples where the solute is a solid and the solvent is a liquid include sugar in water and potassium chloride (KCl) in water.

Examples where both the solute(s) and solvent are solid are brass and bronze in their solid states. In either of these specific alloys, copper is the solvent (being the predominant substance) and either zinc or tin are the solutes, respectively.

Answer 17

This chemical is rated "extremely hazardous," with a flash point somewhere between 100° F and 200° F, and may detonate under normal conditions. Additionally, it is dangerous if it contacts water.

The left-hand (blue) diamond rates the substance according to its human health hazard:

- 0 = No hazard
- 1 = Slight hazard
- 2 = Moderately hazardous
- 3 = Extremely hazardous
- 4 = Deadly

The upper (red) diamond rates the substance according to its flammability (flash point):

- 0 = Will not burn
- 1 = Above 200° F
- 2 = Between 100° F and 200° F
- 3 = Between 73° F (room temperature) and 100° F
- 4 = Below 73° F (room temperature)

The right-hand (yellow) diamond rates the substance according to its chemical reactivity:

- 0 = Stable
- 1 = Unstable if heated
- 2 = Violent chemical change, no detonation
- 3 = Shock or heat may detonate
- 4 = May detonate under normal conditions

The lower (white) diamond is a place for abbreviations regarding additional properties. Standardized abbreviations include:

- ACID = Acidic
- ALK = Alkaline
- COR = Corrosive
- OX = Oxidizer
- P = Polymerization (chemically reacts with itself under certain conditions)
- W (with a line going through it) = Reacts with water

Answer 18

This chemical is rated "moderately hazardous," is not flammable, but is unstable if heated. Additionally, it is corrosive.

Answer 19

(From SDS number CJGPK)

```
SDS Safety Information
FSC: 6810 NIIN: 00-264-5906 SDS Date:  03/01/1997 SDS Num:  CJGPK
Submitter:  D DG Tech Review:  03/10/2000 Status CD: C
Product ID: 200 PROOF ETHYL ALCOHOL MFN: 02
Article:  N Kit Part:  N

Fire and Explosion Hazard Information
Flash Point Method:  TCC
Flash Point:  = 14.4 C, 58.0 F Flash Point Text:
Autoignition Temp:  Autoignition Temp Text:  N/P
Lower Limits:  3.3 Upper Limits:  19
```

Answer 20

Answer 21

Answer 22

Hint: bones contain a lot of *calcium*.

Answer 23

Answer 24

Answer 25

Answer 26

Answer 27

Answer 28

Answer 29

- ^{195}Pt (Platinum-195) – Protons = 78 ; Neutrons = 117
- ^{75}As (Arsenic-75) – Protons = 33 ; Neutrons = 42
- ^{235}U (Uranium-235) – Protons = 92 ; Neutrons = 143
- ^{40}Ca (Calcium-40) – Protons = 20 ; Neutrons = 20

Answer 30

- $1s^2$ means 2 electrons reside in the "s" subshell of the first (K) shell *(filled to capacity)*
- $2s^2$ means 2 electrons reside in the "s" subshell of the second (L) shell *(filled to capacity)*
- $2p^6$ means 6 electrons reside in the "p" subshell of the second (L) shell *(filled to capacity)*
- $3s^2$ means 2 electrons reside in the "s" subshell of the third (M) shell *(filled to capacity)*
- $3p^1$ means 1 electron resides in the "p" subshell of the third (M) shell

An "orbital" is a *pair* of electrons comprising all or part of a subshell. This means each subshell holds an *even* maximum number of electrons.

Answer 31

This table is called the *periodic table of the elements*, and it arranges all the known elements (unique types of atoms) in order of their atomic number, atomic weight, and chemical characteristics.

Answer 32

When electrons cluster around the nucleus of an atom, they do not do so with equal status. Rather, they must locate themselves in different energy "levels" known as *shells*, kind of like people sitting in different levels of seats in an amphitheater. Since the outermost level of electrons (the outermost "shell") is the one most likely to interact with electrons from other atoms to form chemical bonds, these electrons predominantly determine the chemical nature of the atom.

Many students find the analogy of an *amphitheater* particularly insightful. Just as people desire to sit as close to the action in an amphitheater as they can (the lowest-level seating), electrons seek the lowest *energy* levels that they can.

We can even extend the analogy further, where money paid for amphitheater seating is analogous to energy exchanged in electron shell filling: just as people must give up more money to sit closer to the action in an amphitheater, electrons must lose more energy to occupy a lower-level shell. Conversely, just as you must pay money to get someone to move to a higher-level seat in an amphitheater, you must infuse more energy in an electron to get it to "jump" to a higher-level shell.

Answer 33

The color of light emitted by an "excited" atom is due to energy emitted by its electrons after having absorbed energy from an external source (in this case, the electric current through the tube). It is known that free electrons (unbound to an atom) are able to absorb and release energy over a wide range of levels (corresponding to a wide range of optical colors). If electrons really were free-ranging "satellites" whirling around atomic nuclei, then they ought to be able to release a wide range of light colors just as they do when free. However, the electrons bound to an atom's nucleus do not do so. Rather, they emit light of very specific frequencies (colors) in the same way a tuning fork emits the same characteristic sound pitch, no matter how hard or how soft it has been struck.

This phenomenon clearly shows that electrons fall into discrete "states" when part of an atom. It is this discrete, or *quantum* nature of atomic electrons that gives rise to predictable chemical behavior (bonds between atoms formed by electron interaction), and the periodicity of Mendeleyev's table.

Answer 34

Chemical bonds are always the result of interactions between the electrons of different atoms.

Chemical bonds are classified into two major categories: *ionic* and *covalent*. Ionic bonds are where the constituent atoms have the tendency to dissociate into oppositely-charged ions (for example, sodium and chlorine forming table salt: NaCl), and thus are held together by electrostatic attraction. Covalent bonds are formed by the sharing of electron pairs between atoms. Molecular hydrogen (H_2) is an example of a covalent bond.

The truth is, most chemical bonds cannot be classified simply as purely ionic or purely covalent. Chemical bonds may be ionic to some degree and covalent to some degree (indeed, if we expand the definition of "some degree" to be inclusive of 0% and 100%, we may safely say that *all* chemical bonds are ionic to some degree and covalent to some degree).

A good example of this is a *polar covalent bond*, where atoms bonded by the sharing of electron pairs do not share each electron in the pair equally. In other words, a covalently-bonded molecule may possess a *dipole*, where one side of it is more negative and the other side of it is more positive. Water is an example of a polar covalent bond, and its dipole character is what makes microwave cooking possible. Microwaves force the polar water molecules to oscillate along with the oscillating electric field. If water molecules were completely nonpolarized, they would not be affected by any external electric field, and thus they would not be moved by the oscillating electric field of a microwave beam.

Answer 35

This is what the response should have been, if CO_2 was indeed what was being sensed:

Gas source	**CO_2 content**	**Ideal photodiode output voltage**
Ambient air	Weak	*Strong*
Exhaled air (breath)	Moderate	*Moderate*
Pure CO_2	Strong	*Weak*

Answer 36

In each vertical column of the periodic table (each column called a *group*), the number of electrons in the outermost (unfilled) shells is the same. This indicates that elements sharing a common table column have similar chemical properties.

At first glance, it may appear as though the outermost shells for elements in each group of the periodic table do *not* share the same number of electrons, but one must realize the equality of electron numbers applies to the total number of electrons in *all unfilled shells* and not just the last shell. Tungsten and molybdenum, for example, with the respective electron configurations of $5d^4 6s^2$ and $4d^5 5s^1$, both have a total of 6 electrons in their two (unfilled) shells.

Answer 37

Answer 38

The neutralizer reaction is highly exothermic!

Answer 39

If there is no CO_2 in the sample gas at all, all four resistance cells will experience the exact same amount of cooling, and the bridge will be balanced.

As sample gas CO_2 concentration increases, the relative concentration of hydrogen increases in the green-colored tubing compared to the red-colored tubing because the CO_2 is being absorbed by the potassium hydroxide (KOH) solution. Since hydrogen has a much greater specific heat than carbon dioxide, the pure hydrogen (green) stream will have greater cooling capacity than the mixed (red) stream, causing the green-shaded resistance cells to decrease in resistance. This unbalances the bridge, making the left-hand terminal of the voltmeter negative and the right-hand terminal positive.

Answer 40

Answer 41

Answer 42

- 35.2 moles of alumina Al_2O_3 at 25 ^oC = **3590.4 grams = 3.5904 kg**
- 10.6 moles of nitroglycerine $C_3H_5N_3O_9$ at 77 ^oC = **2406.2 grams = 2.4062 kg**
- 3.7 moles of phosgene $COCl_2$ at 145 ^oF = **366.3 grams = 0.3663 kg**
- 130 moles of tetraethyl pyrophosphate or "TEPP" $[(CH_3CH_2O)_2PO]_2O$ at −10 ^oF = **37,700 grams = 37.700 kg**

Answer 43

Partial answer:

- 1.1 kilograms of pure propane C_3H_8 at −30 ^oC and 3 atmospheres = **25 moles**
- 71 grams of hexafluoroacetone $(CF_3)_2CO$ at 110 ^oF and 50 bar (gauge) = **0.4277 moles**

Answer 44

Answer 45

V = 38,680 liters

Answer 46

Partial answer:

±5% (gold color code) is **50,000 ppm**.

- 3.6 milliliters of methyl alcohol mixed into 10.5 liters of pure water = **342.74 ppm** *If your calculated answer was 342.86 ppm, you made a minor error: you took 10.5 liters to be the total volume of liquid after adding the alcohol. 10.5 liters is just the water's volume, not the total solution (mixed) volume!*
- 10 grams of hydrofluoric acid added to 560 kg of water = **17.86 ppm**

Answer 47

Answer 48

Partial answer:

m = 30,600 grams of ammonia = 30.6 kg.

Answer 49

Partial answer:

Hydrogen/Oxygen mass ratio = 0.12625:1

Oxygen/Hydrogen mass ratio = 7.9208:1

The "setpoint" variable in this control system needs to be set to 7.9208 (assuming both mass flowmeters have identical calibrated ranges).

Answer 50

A mole is a specific quantity of unit "entities," usually *molecules* when used in the context of chemistry. The SI (Systéme International) definition of the mole is the amount of substance that contains 6.0221367×10^{23} particles or entities. This very large constant is referred to as *Avogadro's number*.

Answer 51

- 1 mole of pure ^{12}C = 12 g
- 1 mole of carbon (naturally occurring) = 12.011 g
- 1 mole of pure ^{56}Fe = 56 g
- 5.5 moles of mercury (naturally occurring) = 1.1032 kg
- 0.002 moles of helium (naturally occurring) = 8.0052 mg

To calculate each of these masses, simply multiply the number of moles by the atomic mass given or found in the periodic table.

Answer 52

- *Each molecule of H_2O contains:*
- 2 atoms of H at 1.01 amu each
- 1 atom of O at 16 amu each

(1 mol)[(2 atoms)(1.01 amu/atom) + (1 atom)(16 amu/atom)] = 18.02 g

- *Each molecule of D_2O contains:*
- 2 atoms of D (H^2) at 2 amu each
- 1 atom of O at 16 amu each

(1 mol)[(2 atoms)(2 amu/atom) + (1 atom)(16 amu/atom)] = 20 g

- *Each molecule of H_2SO_4 contains:*
- 2 atoms of H at 1.01 amu each
- 1 atom of S at 32.06 amu each
- 4 atoms of O at 16 amu each

(1 mol)[(2 atoms)(1.01 amu/atom) + (1 atom)(32.06 amu/atom) + (4 atoms)(16 amu/atom)] = 98.08 g

- *Each molecule of CH_4 contains:*
- 1 atom of C at 12.01 amu each
- 4 atoms of H at 1.01 amu each

(14 mol)[(1 atom)(12.01 amu/atom) + (4 atoms)(1.01 amu/atom)] = 224.7 g

- *Each molecule of $(NH_4)_2CO_3$ contains:*
- 2 atoms of N at 14.01 amu each
- 8 atoms of H at 1.01 amu each
- 1 atom of C at 12.01 amu each
- 3 atoms of O at 16 amu each

(5 mol)[(2 atoms)(14.01 amu/atom) + (8 atoms)(1.01 amu/atom) + (1 atom)(12.01 amu/atom) + (3 atoms)(16 amu/atom)] = 480.55 g

Answer 53

15 moles of zinc and 15 moles of sulfuric acid are needed to produce 15 moles of hydrogen gas, since the molecular ratio for all reactants and products is 1:1.

Answer 54

- Solute: table sugar
- Solvent: water
- Solution: the liquid sugar/water mixture
- Saturation: when the solution can accommodate no more sugar
- Supersaturation: a condition beyond saturation, where any additional solute (sugar) forces a larger quantity of solute to immediately fall out of the solution
- Precipitate: the sugar left in solid form on the bottom of the container
- Supernatant: the saturated solution above the precipitate

In this example, the sugar is the *solute*, the water the *solvent*, and the sugar/water mixture the *solution*. When enough solute has been added to solvent that the solvent can dissolve no more, the solution is said to be *saturated*.

If additional solute is added to a saturated solution, the solution may become *supersaturated*. This is a "metastable" state that may exist for substantial periods of time only if the solution is undisturbed.

Answer 55

A *solution* is a stable and molecularly homogeneous mixture of two or more substances. A *suspension* is a heterogeneous mixture where separation of the components occurs over time. A *colloid* is a heterogeneous mixture where separation is negligible over time.

An *aerosol* is either a solid or a liquid dispersed in a gaseous medium. *Foams* are gaseous substances dispersed in either liquid or solid media. *Emulsions* are liquids dispersed in either liquid or solid media. Finally, *sols* are solids dispersed in either liquid or solid media.

Colloidal mixtures may be viewed as in-between suspensions and true solutions. One way to distinguish a liquid colloidal mixture (often referred to as a *colloidal dispersion*) from a true solution is to use the *Tyndall effect* of light scattering. When light passes though a clear solution, there will be no scattering, because solutions are homogeneous on a molecular level. With either a suspension or a colloid, though, the particles are large enough to scatter light, and will become visibly apparent when a beam of light is passed through the mixture. Once the particle size has been determined to be more than that in a true solution, the distinction between colloid and suspension may be made by detection of settling.

Examples of colloids are smoke in air and calcium in water. Steel, being a mixture of iron, carbon, and other elements, is technically considered a solid colloid ("sol") rather than a solid solution, due to particle size. In other words, the granularity of the carbon particles is not fine enough to be "molecularly homogeneous."

There are two easy tests used to divide gas-based and liquid-based mixtures into solutions, suspensions, and colloids: *settling* and *light dispersal*. If there is substantial settling over time, then the mixture is a suspension. If there is negligible settling, it may be either be a solution or a colloid. The latter distinction is made on the basis of light scattering.

Muddy water is a *suspension* because the dirt particles will settle over time.

Household ammonia is a *solution* because settling never occurs and it does not scatter light.

Milk is a *colloid* emulsion (liquid/liquid) because settling never occurs and it scatters light.

Rubbing alcohol is a *solution* because settling never occurs and it does not scatter light.

Tobacco smoke in air is a *colloid* aerosol (solid/gas) because settling never occurs and it scatters light.

Battery acid is a *solution* because settling never occurs and it does not scatter light.

Whipped cream is a *colloid* foam (gas/liquid) because settling never occurs and it scatters light.

Dusty air is a *suspension* because the dirt particles will settle over time.

Sugar water is a *solution* because settling never occurs and it does not scatter light.

Coffee is a *colloid* sol (solid/liquid) because settling never occurs and it scatters light.

Answer 56

$m = 201.6$ grams $= 0.2016$ kg

Answer 57

125 moles of oxygen gas will be required to completely burn 250 moles of hydrogen gas, because there are an equal number of hydrogen and oxygen atoms in one mole of each, and only one atom of oxygen is needed for every 2 atoms of hydrogen.

The 830 mm HgA pressure is extraneous information, included for the purpose of challenging you to identify whether or not information is relevant to solving a particular problem.

The question of whether or not these rocket engines are polluting requires some thinking beyond the chemistry of combustion in the engine. While the engines themselves only release water vapor (along with some unreacted hydrogen and oxygen), the process by which hydrogen fuel is produced is indeed polluting. Large quantities of pure hydrogen are typically produced using a *reforming* reaction whereby a plentiful hydrocarbon compound such as natural gas (CH_4) is reformed into hydrogen (H_2) and carbon dioxide (CO_2), the latter being a "greenhouse" gas pollutant.

Answer 58

Assuming "room temperature" to be 25 degrees Celsius and sea-level pressure to be 1 atmosphere. we may calculate the number of moles of air molecules in a cubic meter of air as follows:

1 m^3 = 1000 liters

$$PV = nRT$$

$$n = \frac{PV}{RT}$$

$$n = \frac{(1)(1000)}{(0.0821)(298.15)} = 40.85 \text{ moles}$$

A concentration of 1 ppm means 1 molecule out of a million will be methanol, the other 999,999 being air molecules. Thus, for a methanol vapor concentration of 1 ppm we would expect to find 0.00004058 moles of methyl alcohol in 40.85 moles of sample (1 cubic meter).

Given methanol's molecular weight of CH_4O 32.04 grams per mole, this equates to 0.0013089 grams (1.3089 mg) in one cubic meter.

Answer 59

Since the first vial contains *two* drops of 50% plant juice solution, consisting of one drop of pure plant juice with one drop of alcohol, the first vial must contain 0.0006 moles of active ingredient:

$n_1 = \underline{0.0006}$ moles

For each successive vial we take one drop of solution from the previous vial and mix it with 99 drops of pure alcohol, making a $\frac{1}{100}$ dilution ratio. This means the second vial will have $\frac{1}{100}$ the amount of active ingredient as the first vial:

$n_2 = \underline{0.000006}$ moles

The third vial will contain $\frac{1}{100}$ of the second vial's active ingredient:

$n_3 = \underline{0.00000006}$ moles

In fact, we may generalize the dilution in the following equation:

$$n_m = \frac{0.0006}{100^{m-1}}$$

This means the 30th vial will contain the following number of moles of active ingredient:

$$n_m = \frac{0.0006}{100^{30-1}} = 6 \times 10^{-62} \text{ mol}$$

Recall that a single mole is equal to 6.022×10^{23} molecules. This means a molar quantity of 6×10^{-62} moles is equal to 3.61×10^{-38} molecules. Since this number is less than 1, it is purporting to tell us the 30th vial contains just a *miniscule fraction of one molecule!* We know this is impossible, since molecules cannot be divided (at least not without changing their essential properties). The only way to square this amazingly low molar quantity with the indivisibility of real molecules is to conclude that the 30th vial only has a *probability* of containing just a single molecule of the original active ingredient. To be precise, the 30th vial has but a 1 in 2.77×10^{37} chance of containing a single molecule of the original plant juice's active ingredient.

Scientists of this era were aware of the Avogadro number and molecular quantities. When criticised on this point, the inventor of this therapy responded thusly:

> It is of little import whether the attenuation goes so far as to appear almost impossible to ordinary physicians whose minds feed on no other ideas but what are gross and immaterial.

A footnote to this statement defends extreme dilutions in this way:

> Mathematicians will inform them, that in whatever number of parts they may divide a substance, each portion still retains a *small share* of the material; that, consequently the most diminutive part that can be conceived never ceases to be *something*, and can in no instance be reduced to, nothing. Physicians may learn from them that there exist immense powers which have no weight, such as light and heat, and which are consequently infinitely lighter than the medicianl contents of the smallest homeopathic doses. Let them weigh, if they can, the injurious words which excite a bilious fever, or the afflicting news of the death of a son, which terminates the existence of an affectionate mother. Let them only touch, for a quarter of an hour, a magnet capable of carrying a weight of a hundred pounds, and the pain will soon teach them that even the imponderable bodies can also produce on man the most violent medicinal effects! Let any of these weak-minded mortals of a delicate constitution but gently apply, during a few minutes, to the pit of the stomach the extremity of the thumb of a vigorous mesmerist who has fixed his intent, and the disagreeable sensations that he experiences will soon make him repent having set limits to the boundless activity of nature.

Answer 60

Answer 61

Answer 62

Answer 63

Partial answer:

$$2H_2O_2 \rightarrow 2H_2O + O_2$$

Answer 64

Partial answer:

3.33 moles of P_4O_{10} needed to completely react with 20 moles of water, because the ratio of water to tetraphosphorus decoxide in the balanced equation is 6:1.

Answer 65

Answer 66

$$6H_2O + 6CO_2 \rightarrow C_6H_{12}O_6 + 6O_2$$

The energy required to sustain most life on Earth comes from the sun. Sunlight powers the photosynthesis reaction, storing energy in the form of glucose, which animals consume in their food. When digested, the glucose becomes available to the animal body as fuel, and is "burned" by combination with oxygen. This slow "combustion" of glucose provides animals' bodies with power to operate, and it also produces CO_2 which the plants then re-process (with sunlight as the energy source) into more glucose.

Answer 67

Answer 68

Answer 69

In a properly operating circuit with no explosive gas present, $V_{R3} = V_{R4}$ or $V_D = 2V_E$. I will leave it to you to identify good diagnostic tests!

Answer 70

$$SiH_4 + 2O_2 \rightarrow 2H_2O + SiO_2$$

Silicon dioxide is also known as *silica*, and constitutes the mineral *quartz*. This means that a silane fire produces particles of sand in addition to water vapor!

Answer 71

Hydrogen, by itself, is indeed a fuel. By "fuel," I mean a substance that releases energy when oxidized (burned). Hydrogen combining with oxygen to form water is a process of chemical bond-making, and like all bond-forging processes, it occurs with a corresponding release of energy.

However, this is the very bond we must *break* to release hydrogen from water. And we know that bond-breaking requires an *input* of energy. Not surprisingly, it takes exactly the same amount of energy (under ideal conditions) to break this bond as will be released by the re-forging of the same bond during combustion. Practically speaking, it will take a bit more energy to break the bond than we will get back during combustion, so we don't even get as much back as we put in. While hydrogen is indeed a clean-burning fuel, it "costs" slightly more energy to obtain from water than the energy we get out of it, making the whole process a net loss of energy, not a net gain.

Once you understand the exchange of energy in the "hydrogen economy," you realize that hydrogen from the oceans is not a fuel at all, but rather a medium for energy exchange. To electrolyze water, we need energy from some other source (solar, nuclear, etc.), then that energy is "stored" in the hydrogen gas we extract from the water, to be released later on when burned or consumed in a fuel cell. Far from creating energy, we have merely transported energy.

This is not to suggest that the concept of a hydrogen economy is flawed, but merely to underscore the need for a scientifically accurate understanding of it: all hydrogen does is serve as a transport medium, transporting energy from whatever source is used to electrolyze water to the end-point of energy use (automobiles, space heating, industry, etc.).

Answer 72

A picture is worth a thousand words, so they say:

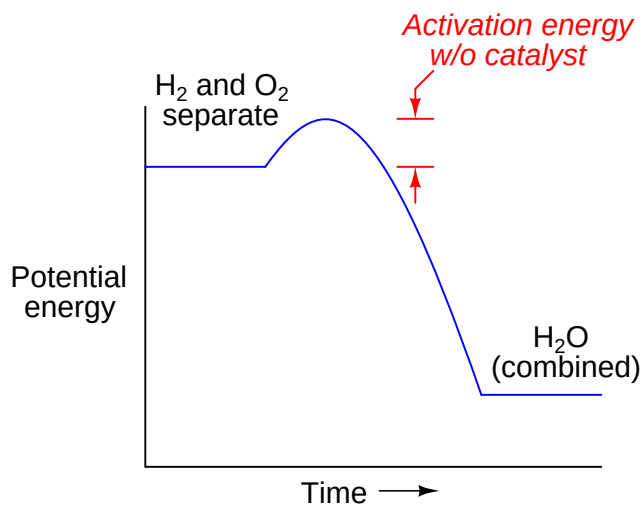

Note: an appropriate catalyst for hydrogen and oxygen is *platinum* metal. Hydrogen and oxygen gas at standard temperature and pressure (STP) in a test tube may not spontaneously combust, but they will in the presence of a platinum wire inserted into that test tube.

Answer 73

For each molecule of methane, there is a single atom of carbon (C) and four atoms of hydrogen (H_4). In order to convert one atom of carbon into 1 molecule of carbon dioxide (CO_2), one molecule of oxygen (O_2) is required:

$$C + O_2 \rightarrow CO_2$$

In order to convert four atoms of hydrogen into water, two more atoms of oxygen are required:

$$H_4 + O_2 \rightarrow 2H_2O$$

Thus, two molecules of O_2 are needed to completely burn one molecule of CH_4. This means, by extension, that two moles of oxygen gas will be required for every one mole of methane. So, if our methane quantity is 1400 moles, our oxygen quantity must be 2800 moles.

Answer 74

$$C_5H_{12} + 8O_2 \rightarrow 6H_2O + 5CO_2$$

Answer 75

$$C_3H_8 + 5O_2 \rightarrow 4H_2O + 3CO_2$$

Answer 76

$$2C_4H_{10} + 13O_2 \rightarrow 10H_2O + 8CO_2$$

Answer 77

Stoichiometry is the primary determining factor for the value of k: setting the methane and steam mass flow rates such that the proper numbers of molecules of each enter the reaction furnace to produce hydrogen and carbon monoxide gas.

Answer 78

An input of energy is required to force molecular bonds to break (i.e. separate molecules into individual atoms), while energy is released when new bonds are formed between atoms. Thus, it would appear at first as though this decomposition (and in fact, *any* decomposition reaction) should be endothermic because we are taking atoms that were previously bound into a single molecule and making them separate.

However, since we are told that the decomposition of acetylene is exothermic, it *must* mean that some new bonds have formed in the decomposition process, giving off more energy than what was required to break the bonds forming acetylene. One of the keys to this mystery is the geometric layout of the acetylene molecule, which places the two hydrogen atoms far apart from each other (with the two carbon atoms between them). Thus, the separation of relatively weak H-C bonds to form a stronger H-H bond is part of the reason why this reaction is exothermic.

Answer 79

Answer 80

Answer 81

This is a graded question – no answers or hints given!

Answer 82

This is a graded question – no answers or hints given!

Answer 83

This is a graded question – no answers or hints given!

Answer 84

This is a graded question – no answers or hints given!

Answer 85

This is a graded question – no answers or hints given!

Answer 86

This is a graded question – no answers or hints given!

Answer 87

This is a graded question – no answers or hints given!

Answer 88

This is a graded question – no answers or hints given!

Answer 89

This is a graded question – no answers or hints given!

Answer 90

This is a graded question – no answers or hints given!

Answer 91

Answer 92

Your loop diagram will be validated when the instructor inspects the loop with you and the rest of your team.

Answer 93

The only "answer" to this question is a properly documented and functioning instrument loop!