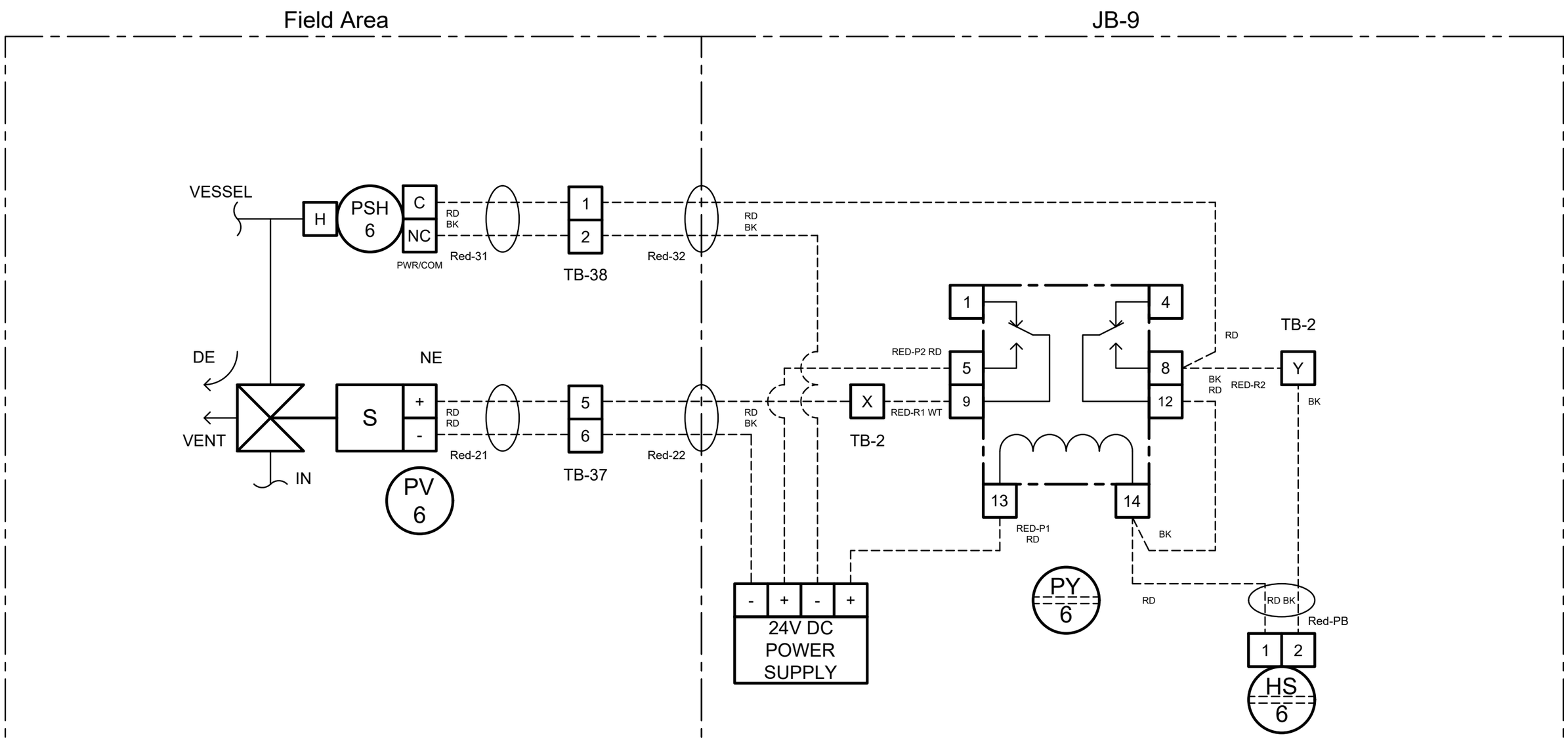


| TAG | MANUFACTURER/MODEL | INPUT | OUTPUT | NOTES |
|---|---|---|---|---|
| PSH 6 | Barksdale E1H-H90 | 13 PSI TRIP | DISCRETE | N.C., RISING TRIP, 1 PSI DB |
| PY 6 | AutomationDirect QM2N1-D24 | 24V | DISCRETE | |
| HS 6 | "Reset Button" | | DISCRETE | Momentary, N.O. |
| PV 6 | ASCO 334 | 24 V | DISCRETE | |

| | | | | |
|---|---|---|---|---|
| BELLINGHAM TECHNICAL COLLEGE | | TITLE: RED IC263.2 LOOP | DWG NO: | |
| SCALE: | DATE: 14Jun2019 | DR BY: KYLE MORRIS | SIZE: A | SHEET:1 OF 1 |