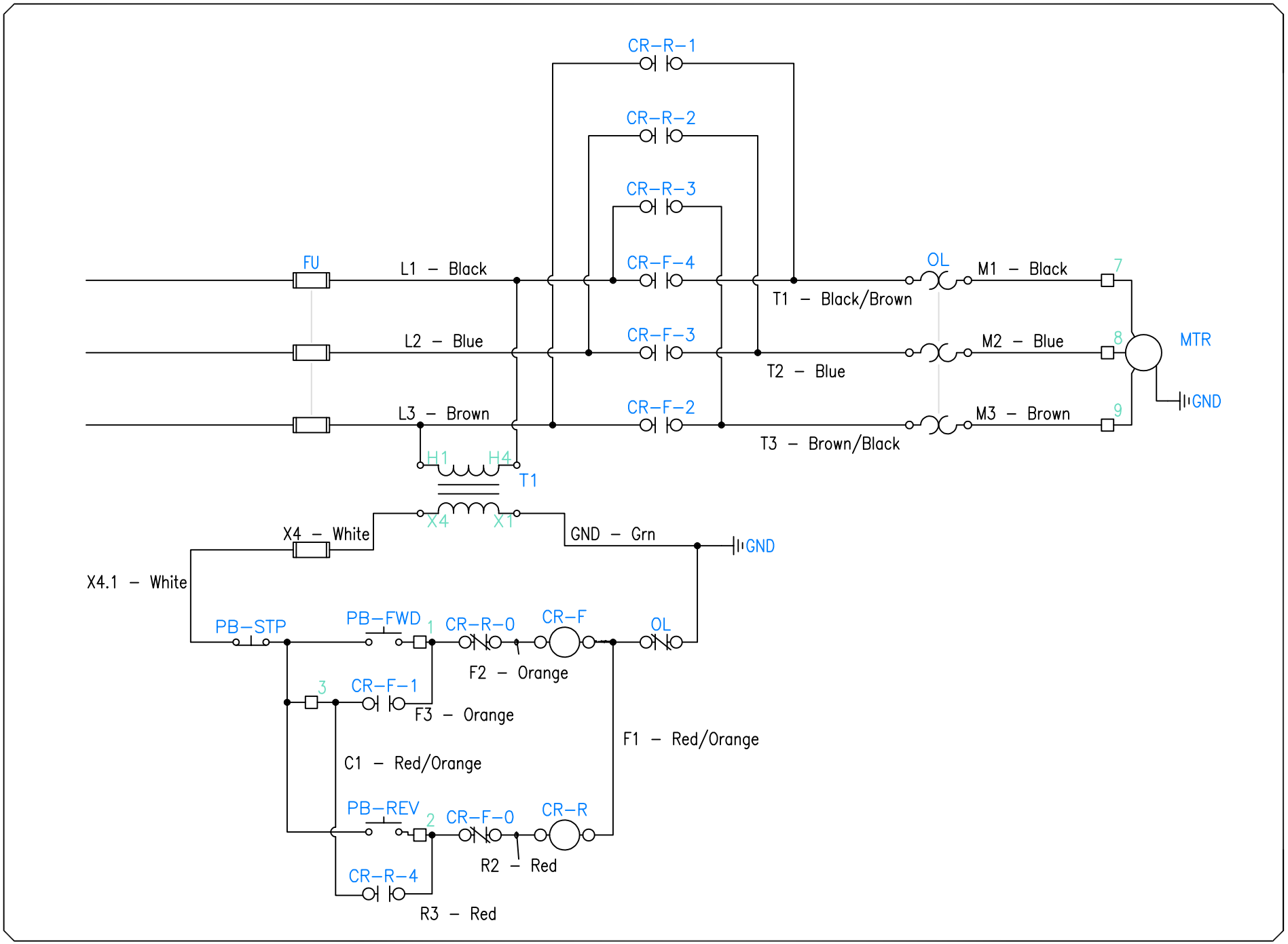

Autodesk

NO.	DATE	REVISION	BY

DWG TITLE

Motor Control Wiring

ENGINEER	CHECKED BY
JOB NO	DRAWN BY *Ryle M*
SCALE No Scale	DATE 9MAY2018
DWG NO	
SHEET NO	*OF*