From The Field to Your Screen

- Developing A Wireless, In Situ Network of Sensors for Data Collection

Marissa Kwon, 1; Manuel Lopez, 1; Thomas DeBell , 2; Dr. Chet Udell, 3 PhD; Dr. John Selker, 3 PhD;

1[College of Engineering, Department of Electrical and Computer Engineering], 2 [Department of Ecological & Biological Engineering], 3 [College of Engineering/College of Ag. Science]

ABSTRACT

Access to in situ, near real-time environmental sensor data in remote locations provides invaluable utility for researchers in fields of agricultural and environmental sciences. For studies where data needs to be gathered frequently or in hard to reach places, remote data collection tools can provide researchers with an inexpensive and systematic method of collecting data. The Evaporometer system was designed with this purpose in mind. The Evaporometer uses remote sensor nodes to transmit data and devices status updates over long distances with a low range low power (LoRa) wireless platform, enabling communication from remote locations lacking data and cell service. Deployment for prototypes was modeled after the climate conditions at HJ Andrew's Experimental Forest located in Blue River Oregon. During testing and development phase the Evaporometer transmitters were designed to send information about environmental factors and device status including battery life, rate of evaporation, temperature, humidity and light (IR and Visible spectra) in remote locations.

RAIN CATCHMENT SYSTEM

The Evaporometer transmitter measures Evaporation with the aid of a rain gauge whose mass is measured over time. Our rain gauge system uses a strain gauge to measure the mass of a container filled with dense fiberglass wick to measure evaporation (Knutson and Selker). This wick draws water up from the bottom of the container and must be primed after the scale is zeroed. A siphon in the container prevents any overflow which would result in a loss of collected rainfall and keeps a consistent amount of moisture within the container to measure evaporation.

HJ ANDREWS DEPLOYMENT

A receiver hub was connected to an AC power source at the base of the Discovery Tree. The Evaporometer transmitter was mounted directly above a stream, a quarter of a mile away from the hub.

This location was chosen to record greater fluctuations in data and to test performance under the harshest environmental conditions. The rain catchment system was primed with 500 ml of water flowing at a constant rate for 20 min. This produced a desired linear increase in mass over time, which we observed from the data logged onto our Google spreadsheet.

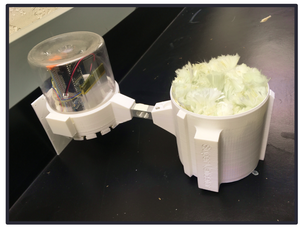

An early prototype Evaporometer transmitter used for first wave of data collection in the HJ Andrews Forest

Left to right: Dr. Chet Udell, Tom DeBell, and Marissa Kwon mount an Evaporometer and prime the water catcher with 500 ml of water above a stream within the HJ Andrews Forest.

DESIGN AND METHODOLOGY

The main purpose of the Evaporometer project is to track the rate of evaporation and other environmental factors and to gather information about LoRa performance in forested areas. LoRaWAN (Long Range Wide Area Network) has great potential to communicate over long distances. In remote open areas, this range can be as great as 26 km line-of-sight; however in urban or obstructed areas range is often reduced to 2-5km. The performance of LoRa sensors located in the understory of HJ Andrews Experimental Forest will help determine if LoRa has potential for remote sensing in different environments.

Multiple Evaporometer sensors can be installed to gather in situ data about the environment. These transmitters enter a sleep period of five minutes and periodically wake to send sensor data to a separate central receiver hub connected to an Ethernet shield. This receiver then uploads the data collected to a Google spreadsheet for convenient remote access.

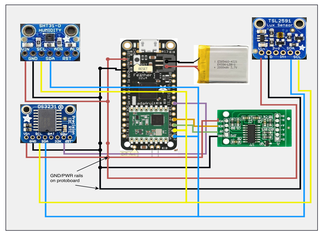

(Above) Connection diagram of the Evaporometer transmitter (left to right, top to bottom): temp/humidity sensor, external RTC, Adafruit Feather 32u4 with RFM95 LoRa transmission, 3.7V Li-poly battery, HX711 load cell, light sensor

(Right) This QR code provides a link to near real time data collected by our sensor over several months.

SCAN QR CODE FOR LINK TO HJ ANDREWS SENSOR DATA

THE FLOW OF DATA

Data collection and transmission are handled by an Adafruit Feather 32u4 development board with a built-in LoRa radio that sends encrypted data via 900Hz ISM band to an Evaporometer receiver with a similar model.

Figure 1 follows the movement of data that starts out as environmental factors and ends up as values logged and accessible with an internet connection.

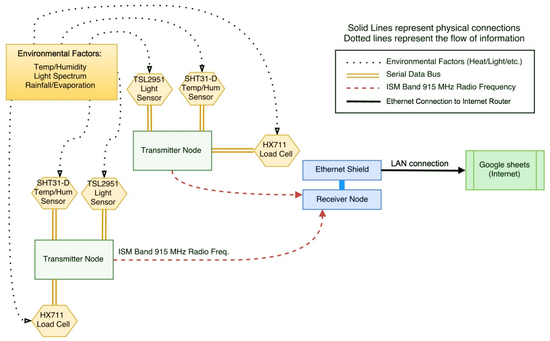

Figure 1: A flow chart depicting the patch data takes from the environment to the Google Spreadsheet

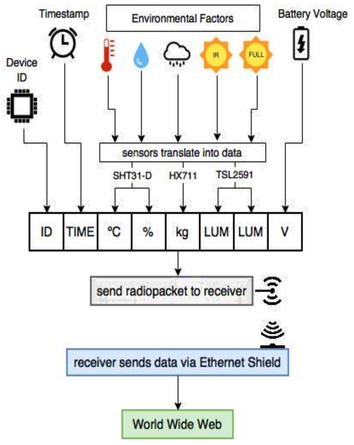

Figure 2: A diagram of sensor data from the perspective of the transmitter:

When awake, environmental factors including temperature, humidity, mass read by the load cell, and IR/Full light are measured and their data values are placed in the array. Other information about the device (ID, battery voltage, time) is also added and this data is "packetized" and sent via LoRa radio:

1. Environmental factors are read by sensors and converted into quantifiable data values every five minutes
2. These values undergo several changes until they can be strung together into a packetized message for the receiver.
3. The Evaporometer device ID, time of transmission, and external battery voltage value are to added to the packet later.
4. This packet is sent to the receiver hub via LoRa transmission and uploaded to the World Wide Web.

EVAPOROMETER PERFORMANCE

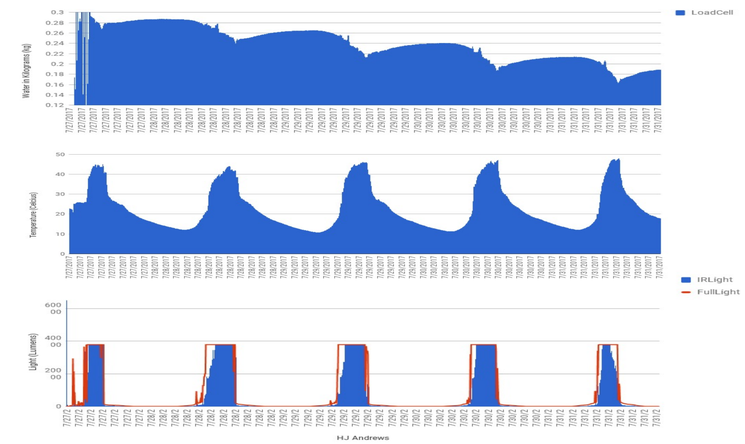

Figure 3: Data from HJ Andrews collected 7/27/17-7/31/17; Top to bottom: mass (kg), temperature (ºC), light (lumens)

Several transmitter design revisions needed to be made after the first deployment. One thing we noticed after 5 days of deployment were that daily temperature measurements taken by the Evaporometer consistently exceed 40 ºC during the midday hours - unusual readings compared to others taken by other control sensors in the HJ Andrews Forest. Plateaus around the midday hours on the light sensor graph suggest that the light sensor saturates when the intensity of the sunlight is greatest [Figure 3].

We hypothesized that the Evaporometer's load cell would report gradual linear changes in mass. However what appeared instead were smooth steady oscillations in mass overtime [Figure 3]. Also, the curvature of load cell measurements corresponds to daily temperature changes. We attribute a change in measured output to the metal strain gauge being directly exposed to extreme sunlight. Changes in heat alter the resistance of the metal strain gauge which interferes with analog values read by the HX711 sensor. This problem will be addressed by adding insulation or a shield for the exposed metal section of the rain gauge to reduce direct exposure to the elements.

CONCLUSION & FUTURE DIRECTION

Deployment of Evaporometer prototypes resulted in the successful logging of data to an online spreadsheet and revealed design flaws that will be rectified to preserve sensor accuracy. Research concluded that the Evaporometer will reliably transmit data in dense forested areas approximately a quarter-mile distance from the receiver hub.

Future directions for the Evaporometer project include continuing to fix all problems compromising sensor accuracy and developing a more complex network of transmitters to increase the area of data collection coverage.

ACKNOWLEDGMENTS & CITATIONS

1. Knutson, J. H., & Selker, J. S. (n.d.). *Unsaturated Hydraulic Conductivities of Fiberglass Wicks and Designing Capillary Wick Pore-Water Samplers* (Tech.).

This project was made possible thanks to OSU faculty and financial support from the National Science Foundation and OSU's Colleges of Forestry, Engineering, Agricultural Sciences, and the SLI Committee. I would also like to acknowledge Oregon State's URSA Engage Program for providing experience and guidance to students interested in undergraduate research.

I am glad to have met so many wonderful people while working on this project and other related projects. Special thanks to Dr. Chet Udell for being an excellent mentor and positive role model over the past year, and to Dr. John Selker whose research and designs inspired the Evaporometer. I would also like to thank Prof. Bo Zhao and Lina DiGregorio from OSU's College of Forestry for their time and for the opportunity to explore different avenues for engineering concepts. Lastly, it has been a pleasure to have worked with the members of OPEnS Lab team, Thomas DeBell, Manuel Lopez, and Mitchell Nelke, who all contributed significantly to the Evaporometer project's success.