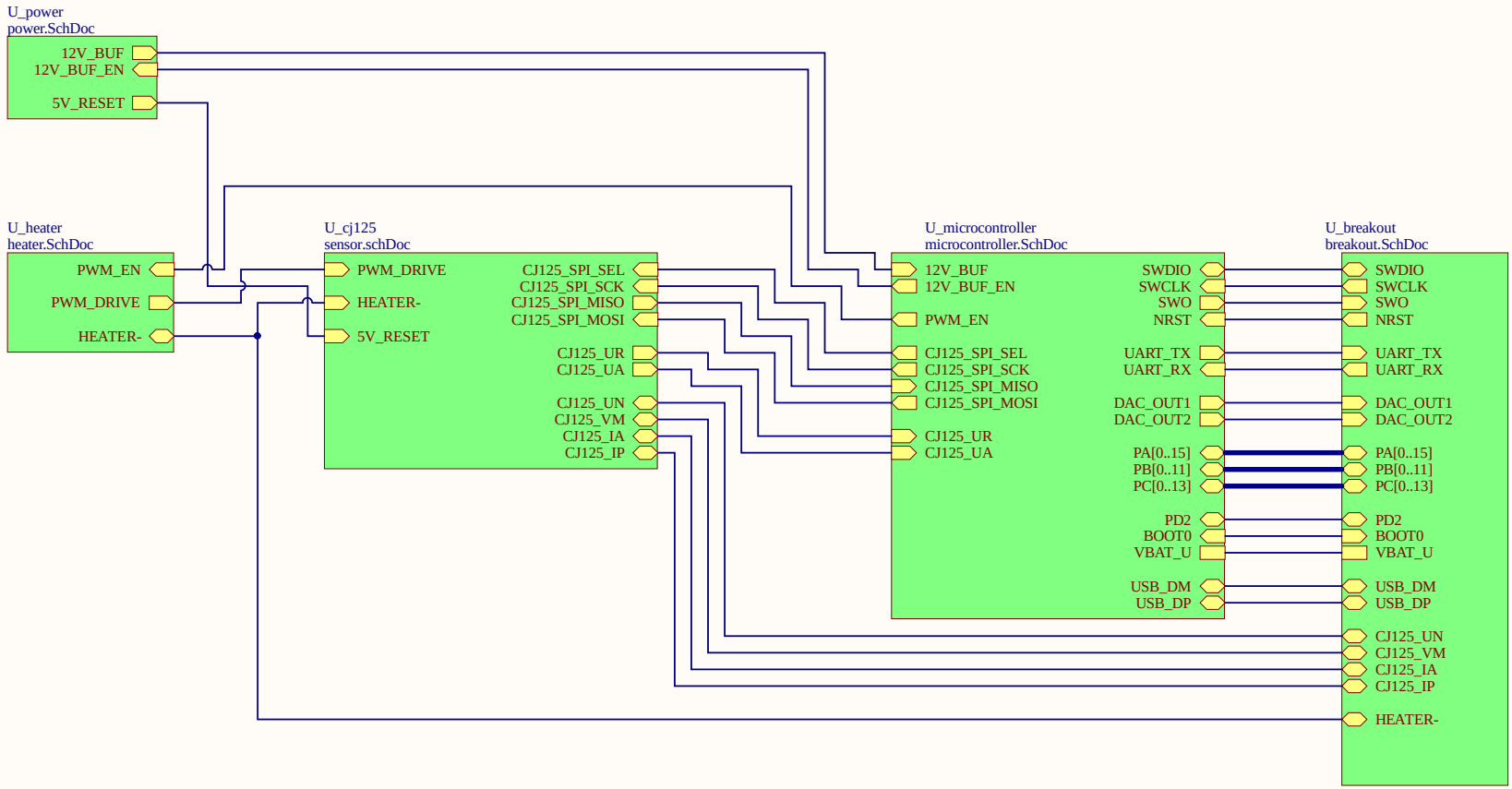

Title: *			
Project: Lambda Oxygen Sensor Interface			
Date: 10/2/2018	Time: 6:58:10 PM	Sheet 1 of 2	File: cjb.SchDoc

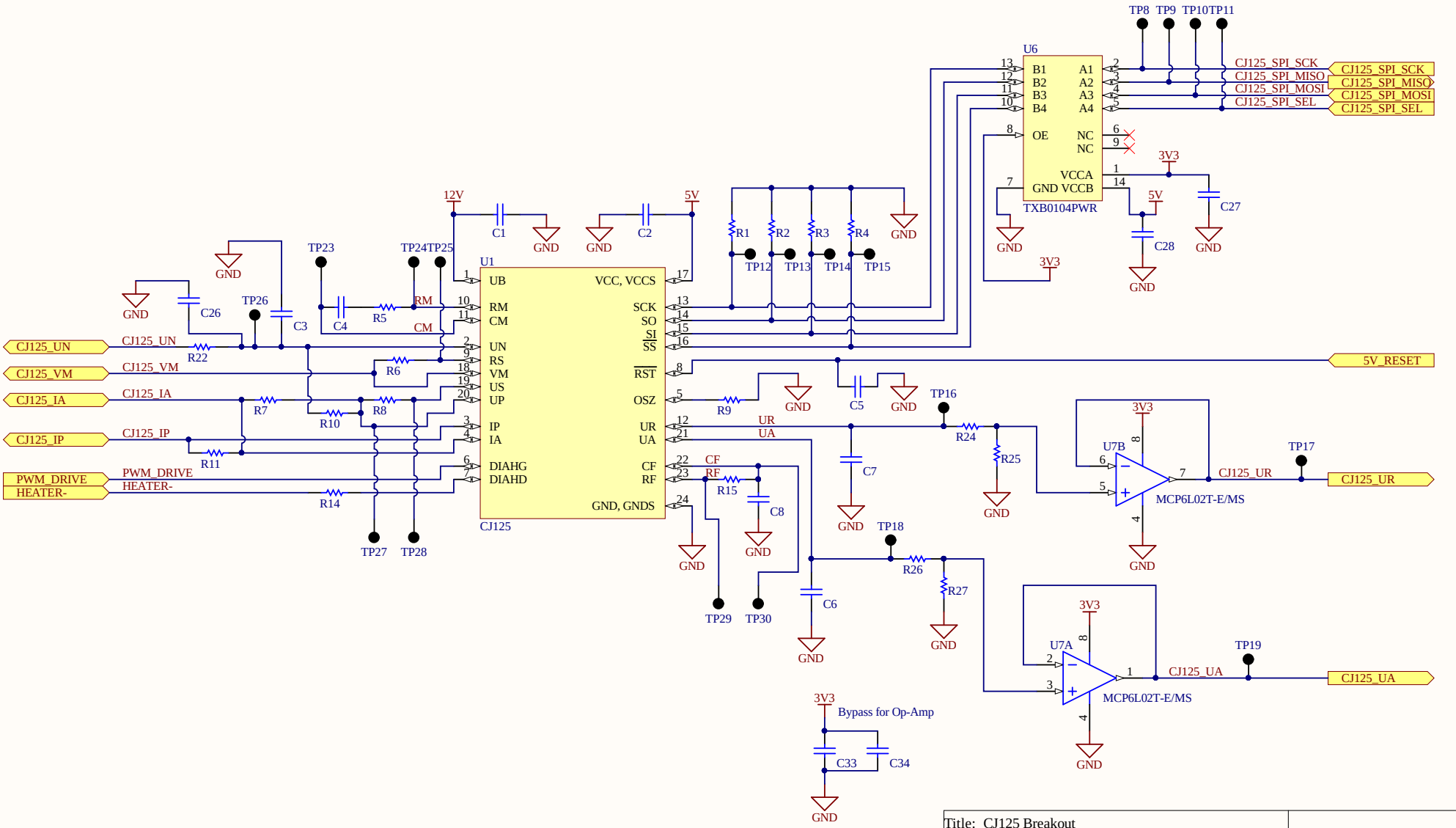
U1
CJ125
U6
TXB0104PWR
U7A
U7B
MCP6L02T-E/MS
Bypass for Op-Amp
CJ125_UN
CJ125_VM
CJ125_IA
CJ125_IP
PWM_DRIVE
HEATER-
CJ125_SPI_SCK
CJ125_SPI_MISO
CJ125_SPI_MOSI
CJ125_SPI_SEL
5V_RESET
CJ125_UR
CJ125_UA
Title: CJ125 Breakout
Project: Lambda Oxygen Sensor Interface
Date: 10/2/2018 Time: 6:58:10 PM Sheet 2 of 2 File: sensor.schDoc

DAC output impedance 9.6kOhm to 13.8kOhm

Max ADC external input impedance is 50kOhm

USART is internally pulled up

SPI is internally pulled down

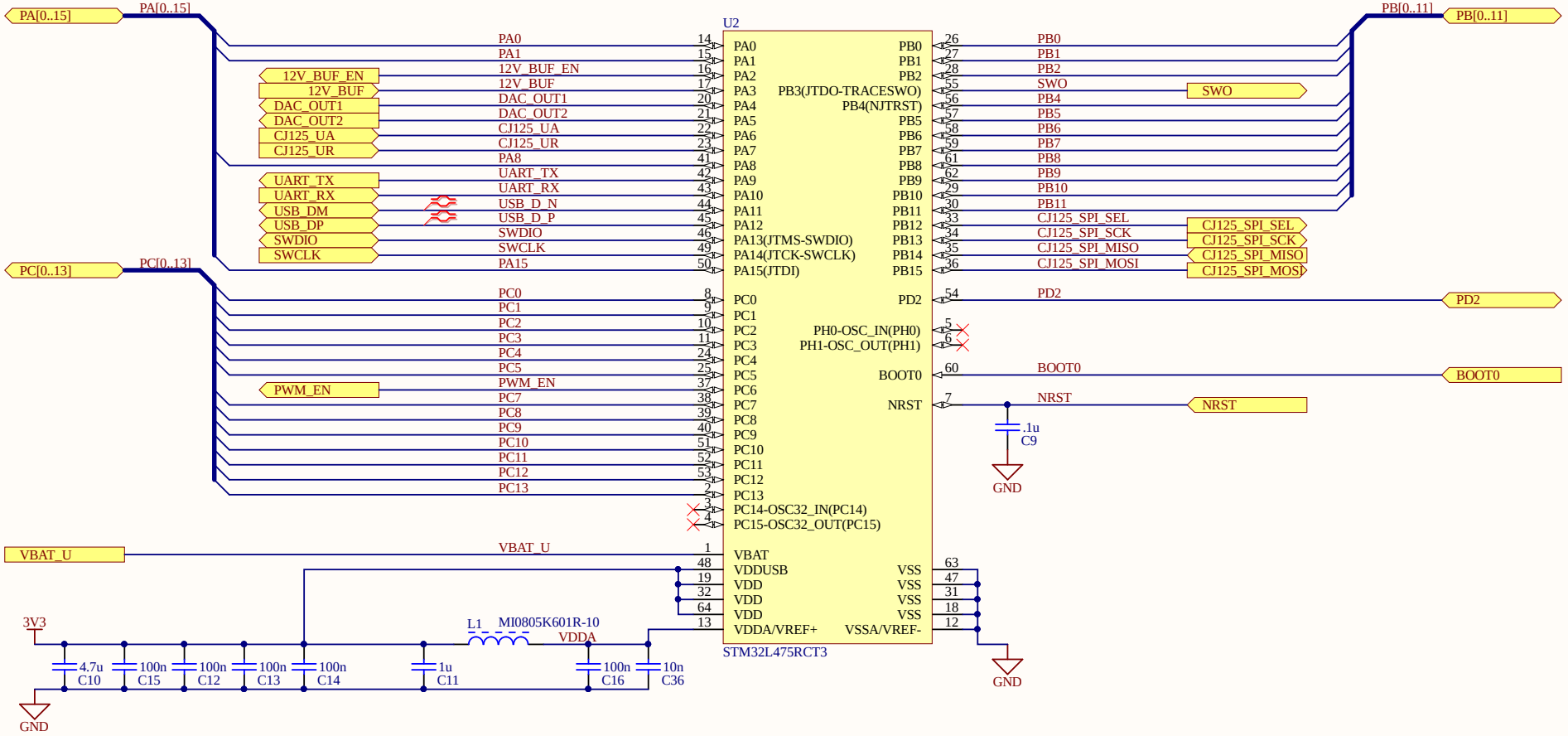

Title: *	
Project: Lambda Oxygen Sensor Interface	
Date: 10/2/2018 Time: 6:58:10 PM Sheet 2 of 3	File: microcontroller.SchDoc

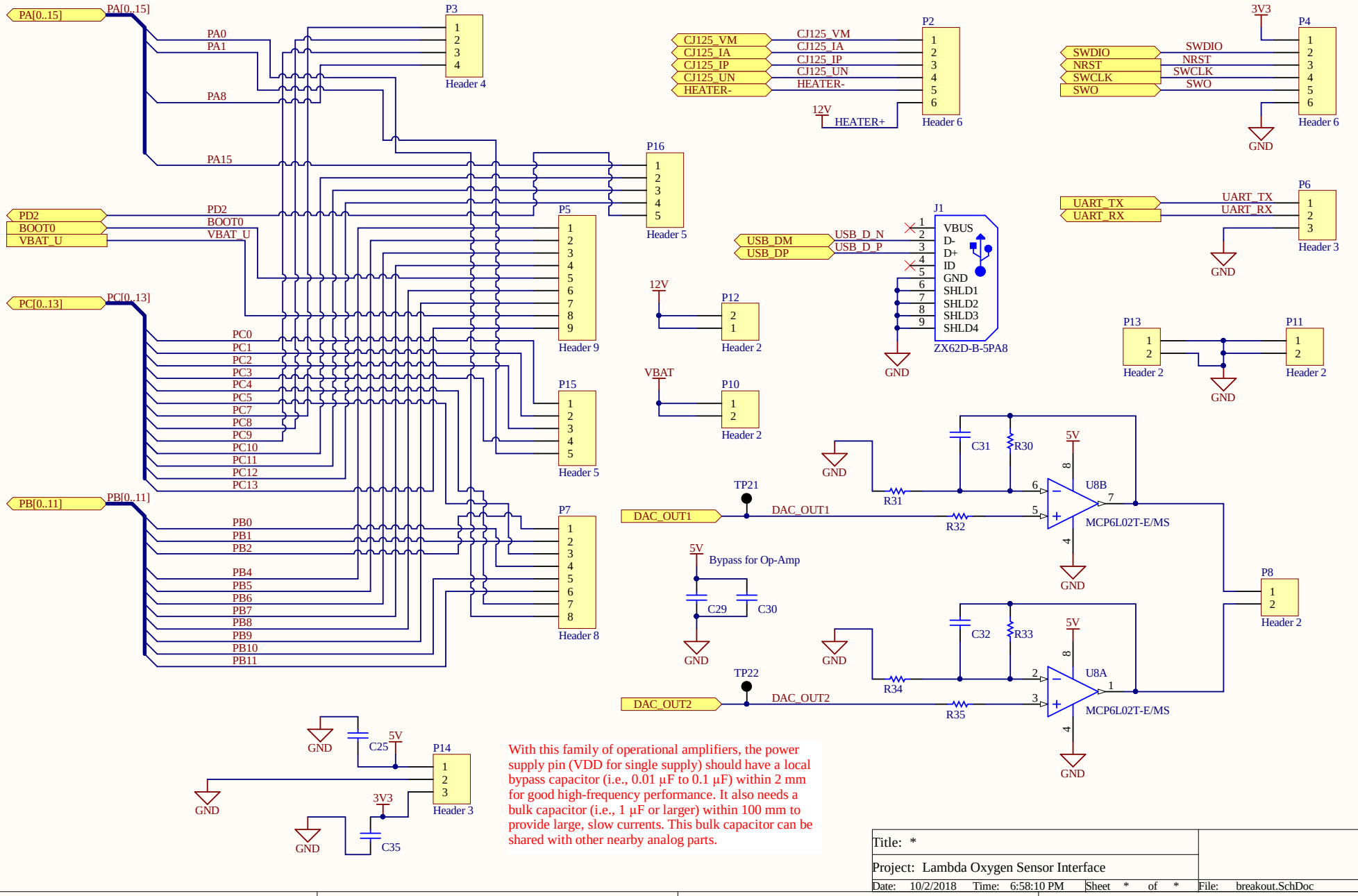
PA[0..15]
PA0
PA1
PA8
PA15
PD2
BOOT0
VBAT_U
PC[0..13]
PC0
PC1
PC2
PC3
PC4
PC5
PC7
PC8
PC9
PC10
PC11
PC12
PC13
PB[0..11]
PB0
PB1
PB2
PB4
PB5
PB6
PB7
PB8
PB9
PB10
PB11
P3
Header 4
P16
Header 5
P5
Header 9
P15
Header 5
P7
Header 8
CJ125_VM
CJ125_IA
CJ125_IP
CJ125_UN
HEATER-
HEATER+
P2
Header 6
12V
P12
Header 2
VBAT
P10
Header 2
USB_DM
USB_DP
USB_D_N
USB_D_P
J1
VBUS
D-
D+
ID
GND
SHLD1
SHLD2
SHLD3
SHLD4
ZX62D-B-5PA8
3V3
P4
Header 6
SWDIO
NRST
SWCLK
SWO
UART_TX
UART_RX
P6
Header 3
P13
Header 2
P11
Header 2
C31
R30
R31
R32
U8B
MCP6L02T-E/MS
TP21
DAC_OUT1
5V
Bypass for Op-Amp
C29
C30
C32
R33
R34
R35
U8A
TP22
DAC_OUT2
P8
Header 2
GND
C25
P14
Header 3
C35
With this family of operational amplifiers, the power supply pin (VDD for single supply) should have a local bypass capacitor (i.e., 0.01 µF to 0.1 µF) within 2 mm for good high-frequency performance. It also needs a bulk capacitor (i.e., 1 µF or larger) within 100 mm to provide large, slow currents. This bulk capacitor can be shared with other nearby analog parts.
Title: *
Project: Lambda Oxygen Sensor Interface
Date: 10/2/2018 Time: 6:58:10 PM Sheet * of * File: breakout.SchDoc

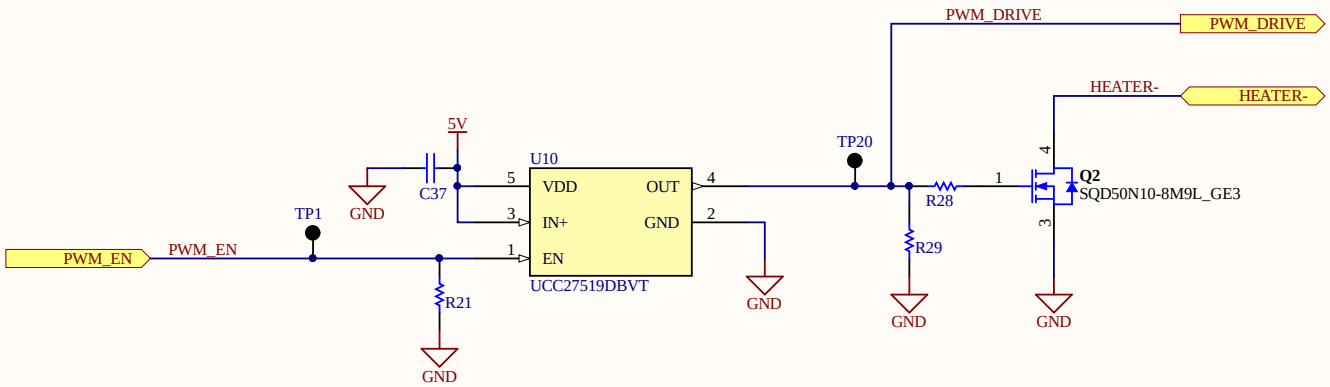

Maybe add current sensor and impedance measurement

Title: *			
Project: Lambda Oxygen Sensor Interface			
Date: 10/2/2018	Time: 6:58:10 PM	Sheet * of *	File: heater.SchDoc

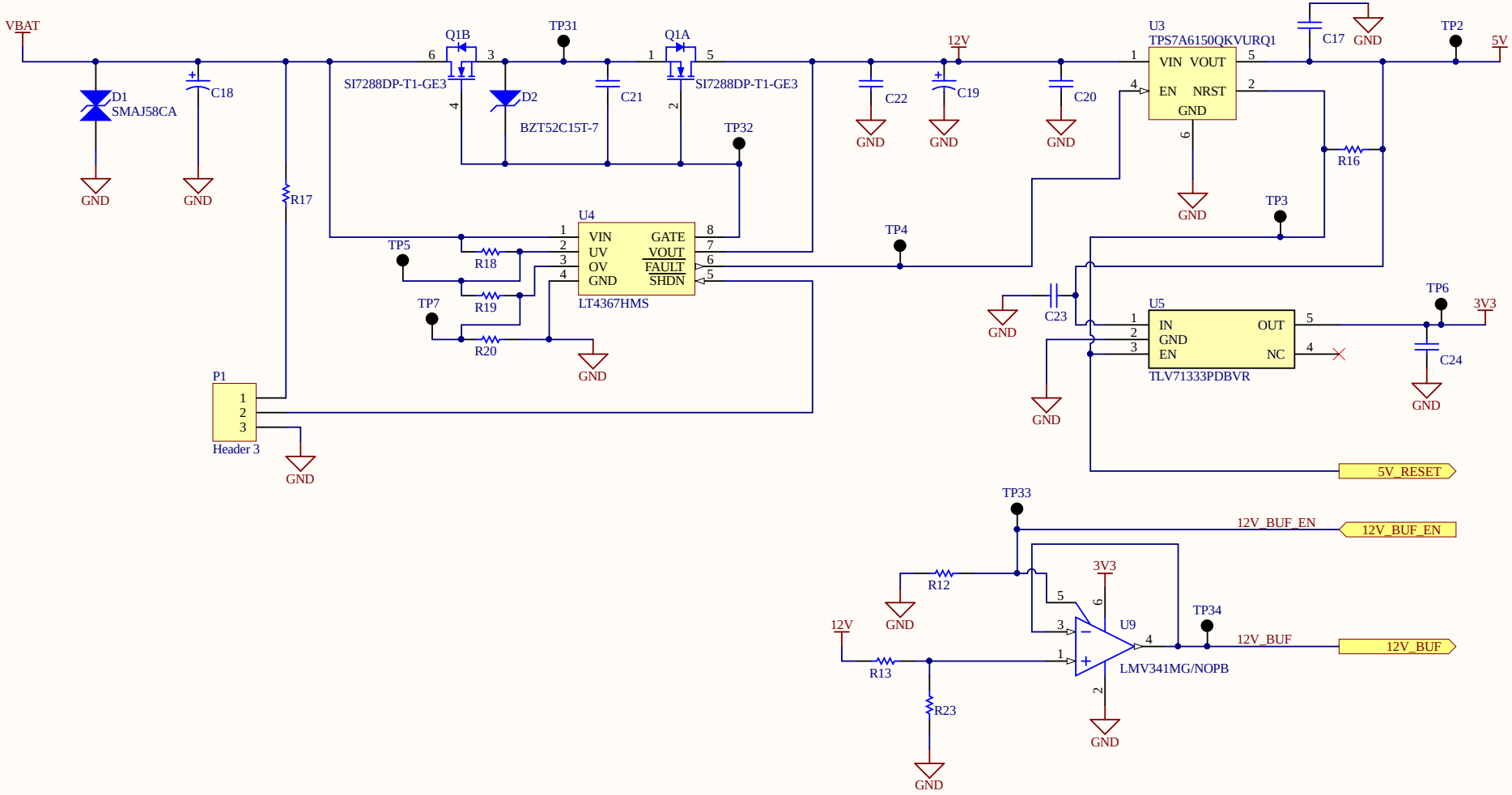

Title: *			
Project: Lambda Oxygen Sensor Interface			
Date: 10/2/2018	Time: 6:58:10 PM	Sheet * of *	File: power.SchDoc

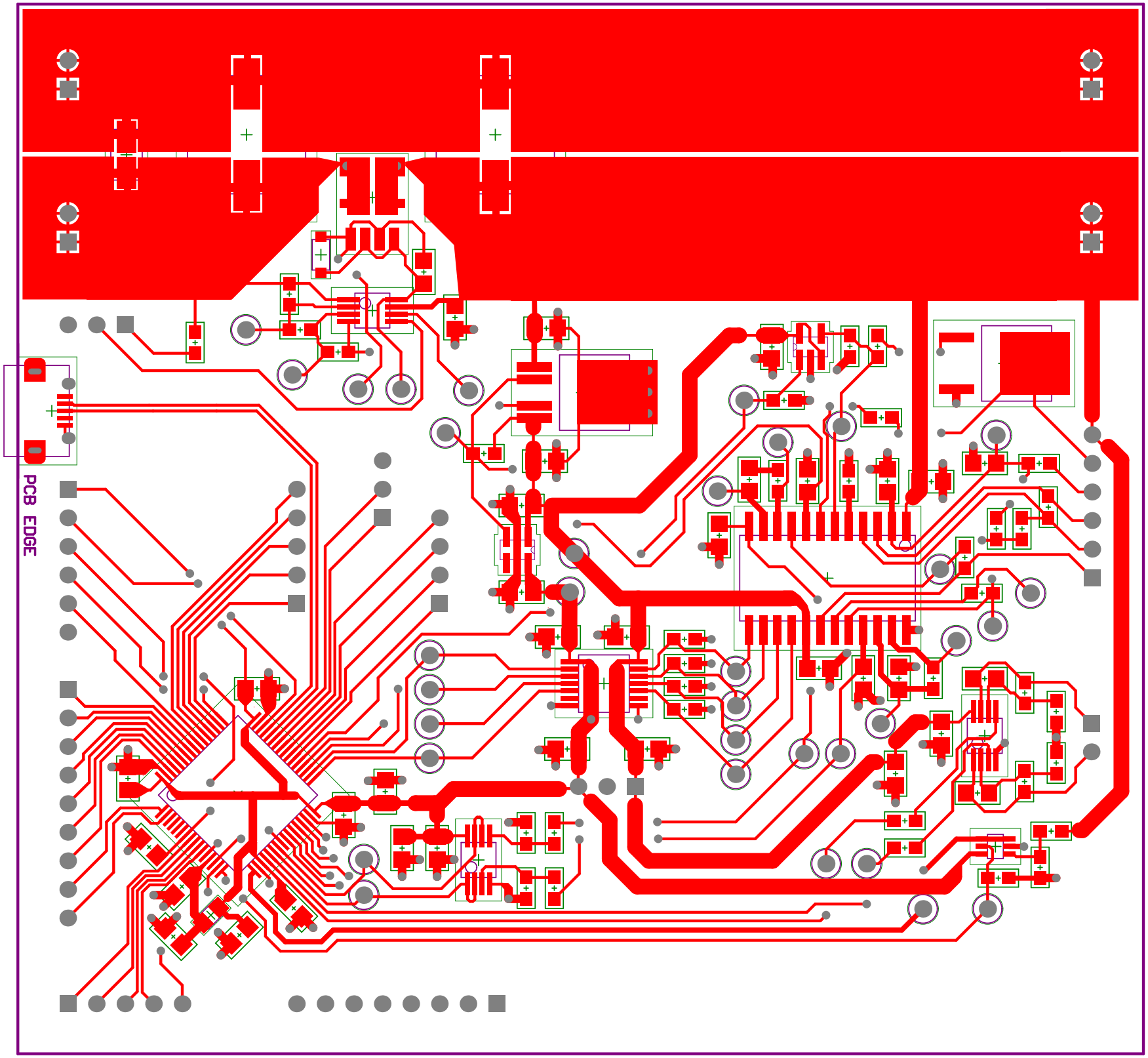
PCB EDGE

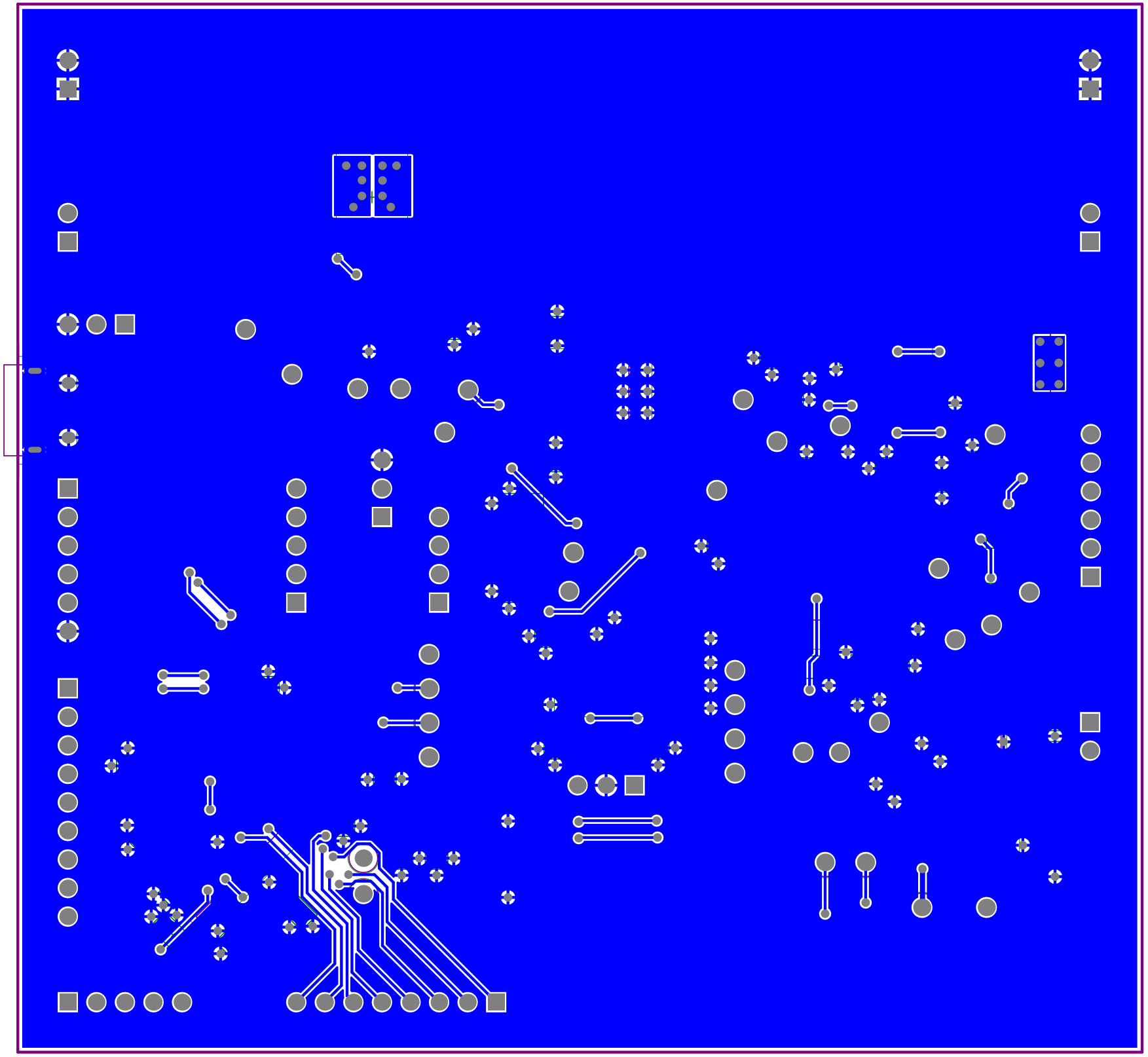

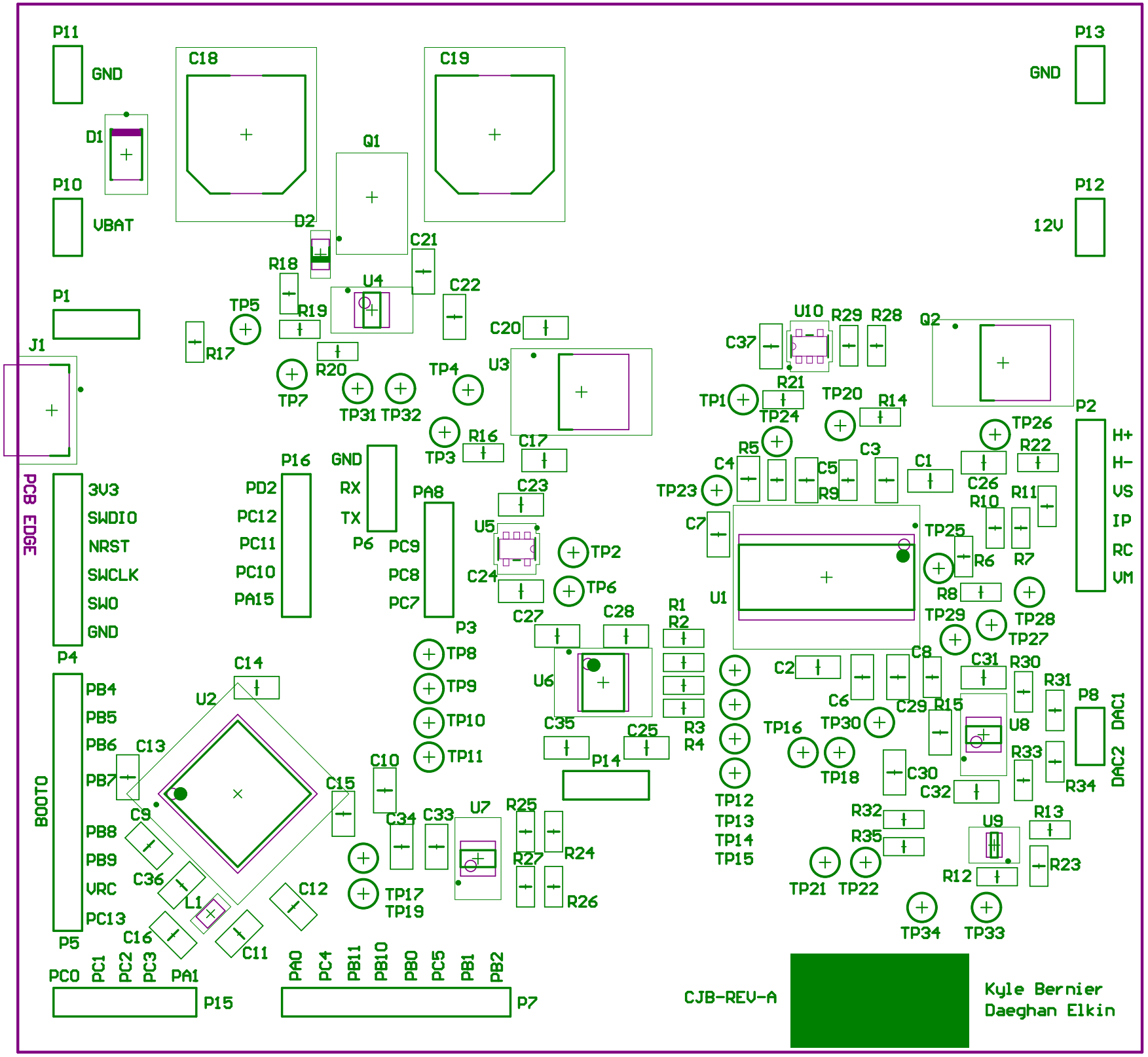
P11
GND
C18
C19
P13
GND
D1
Q1
P10
VBAT
D2
P12
12V
C21
R18
U4
C22
P1
TP5
R19
C20
U10
R29
R28
Q2
C37
J1
R17
R20
TP4
U3
R21
TP7
TP31
TP32
TP1
TP24
TP20
R14
P2
TP26
R16
C17
R5
C3
R22
H+
H-
VS
IP
RC
VM
P16
GND
C4
C5
C1
C26
PCB EDGE
3V3
SWDIO
NRST
SWCLK
SW0
GND
PD2
PC12
PC11
PC10
PA15
RX
TX
P6
PA8
C23
TP23
R9
R10
R11
C7
U5
TP25
PC9
PC8
PC7
TP2
R6
R7
C24
TP6
U1
R8
TP29
TP28
TP27
C27
C28
R1
R2
P3
TP8
TP9
TP10
TP11
U6
C2
C8
C31
R30
R31
P4
C14
U2
C6
C29
R15
P8
DAC1
DAC2
PB4
PB5
PB6
PB7
C13
C35
C25
R3
R4
TP16
TP30
U8
R33
R34
C10
P14
TP18
C30
C32
BOOT0
C15
C9
C34
C33
U7
R25
R32
R13
U9
PB8
PB9
VRC
PC13
R27
R24
R35
C36
L1
C12
TP17
TP19
R26
TP12
TP13
TP14
TP15
TP21
TP22
R12
R23
C16
C11
TP34
TP33
P5
PC0
PC1
PC2
PC3
PA1
P15
PA0
PC4
PB11
PB10
PB0
PC5
PB1
PB2
P7
CJB-REV-A
Kyle Bernier
Daeghan Elkin

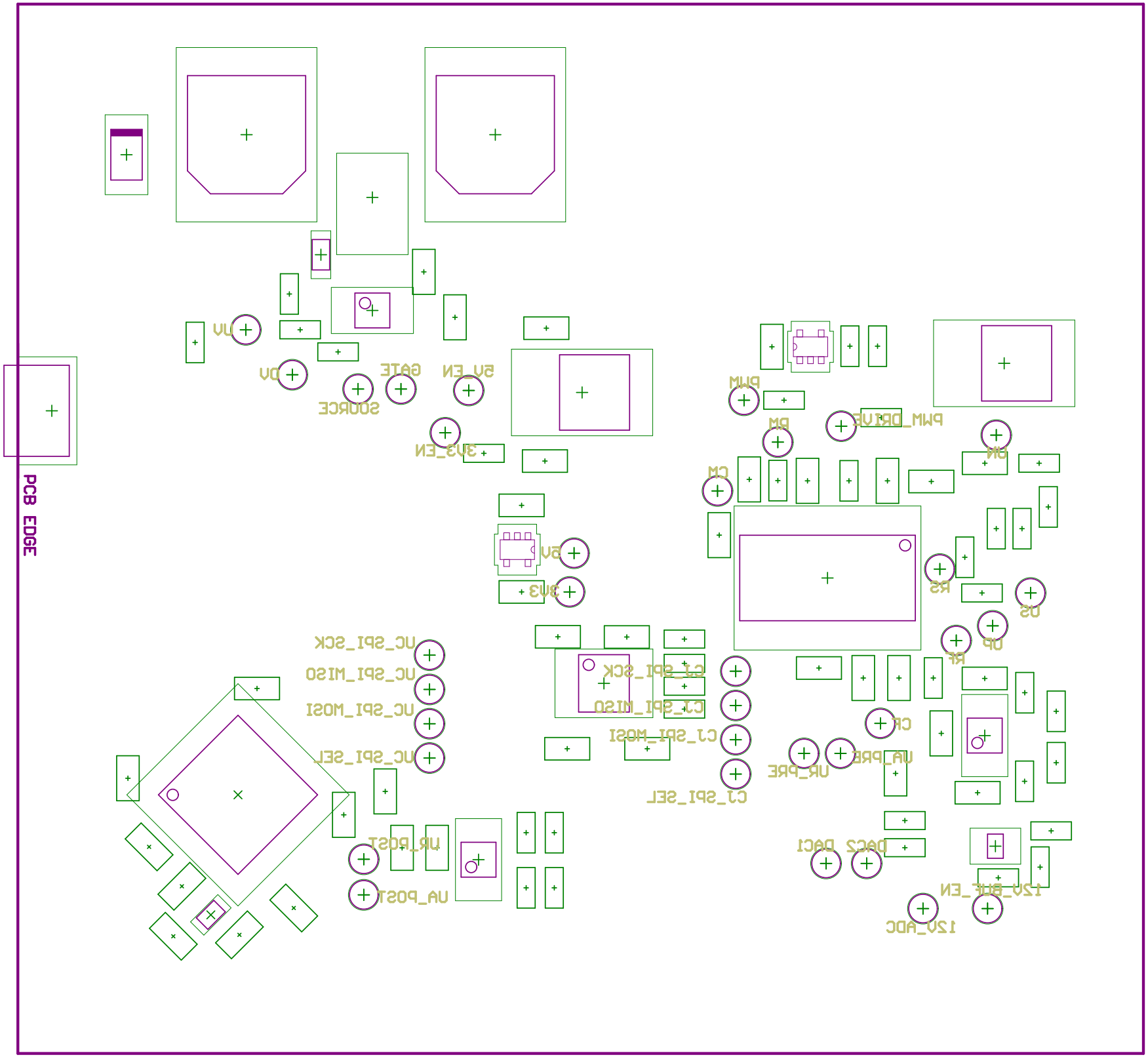
PCB EDGE
5V
GATE
5V_EN
SOURCE
3V3_EN
PWM
PWM_DRIVE
PM
CM
PN
RS
US
UP
RP
3V3
UC_SPI_SCK
UC_SPI_MISO
UC_SPI_MOSI
UC_SPI_SEL
C1_SPI_SCK
C1_SPI_MISO
C1_SPI_MOSI
C1_SPI_SEL
CR
UA_PRE
UR_PRE
DEC1
DEC2
12V_BUF_EN
12V_ADC
UR_POST
UA_POST

Board S