DWG NO	SH
NIR-Spec	1

REVISION HISTORY

REV	DESCRIPTION	DATE	APPROVED
01	-	-	-
-	-	-	-
-	-	-	-

1. INTERPRET PER ASME Y14.100M.

2. PART NUMBERS SHOWN ARE FOR REFERENCE ONLY.

3. INFORMATION IN PARENTHESIS IS FOR REFERENCE ONLY.

4. UNLESS OTHERWISE SPECIFIED,

   A. RESISTOR VALUES ARE IN OHMS.

   B. CAPACITOR VALUES ARE IN MICROFARADS.

   C. INDUCTOR VALUES ARE IN MICROHENRIES.

5. FOR SEPARATE PARTS LIST, SEE NIR-Spec-BOM_(02).xlsx

Hardware Overview

The sensor is kept separate from the main board to keep the detector cool and minimize stray light.

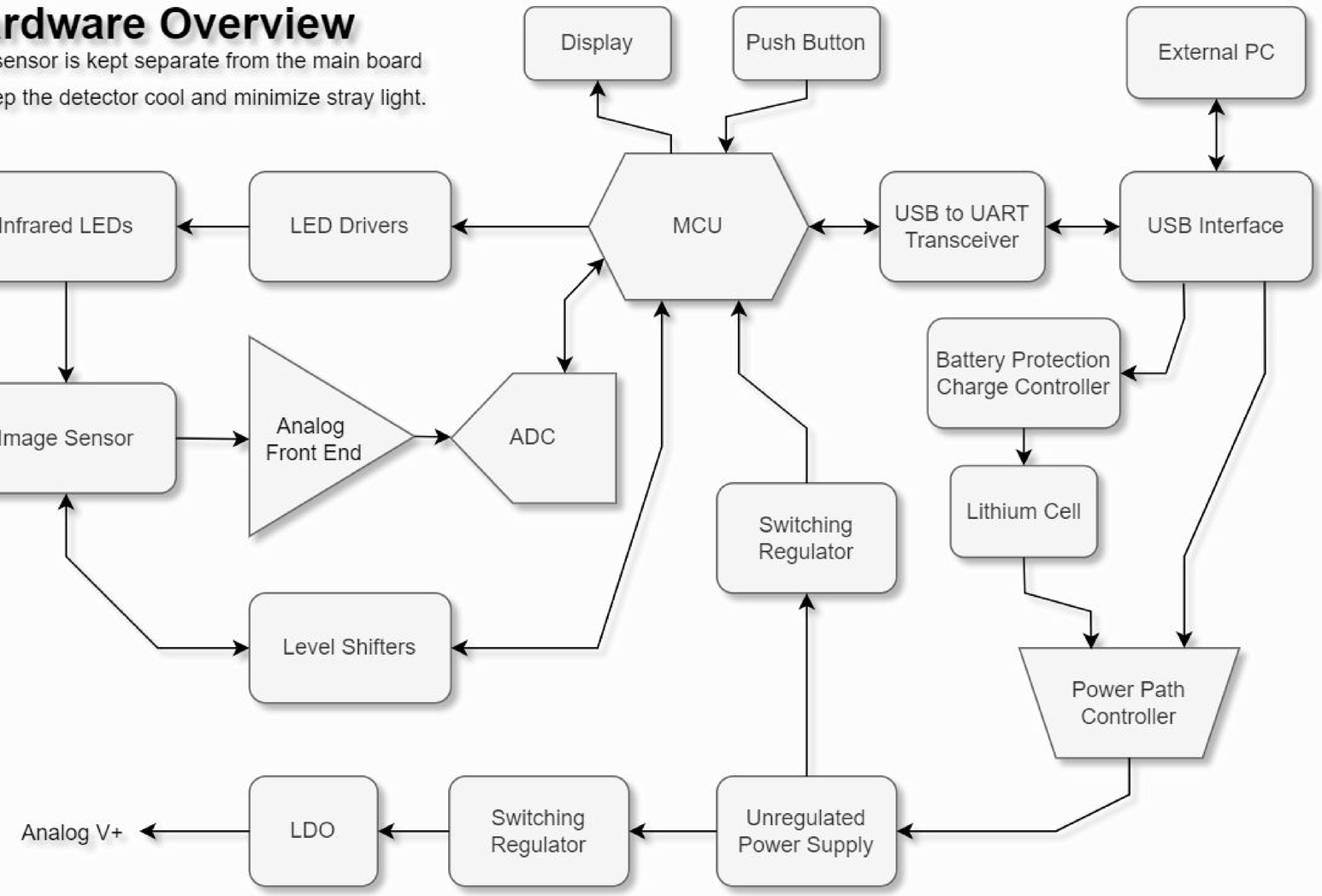

MATERIAL:	DO NOT SCALE DRAWING UNLESS OTHERWISE SPECIFIED, DIMENSIONS ARE IN TOLERANCES: .X +/- 0.1 .XX +/- 0.01 .XXX +/- 0.001	DFTG	K. KIDD	-
		ENG	K. KIDD	-
		MECH	*	*
		MFG	*	*
THIRD ANGLE PROJECTION	ALL SHEETS ARE THE SAME REVISION STATUS			

TITLE:

SCHEMATIC, CCA,
NIR Spec Motherboard
SWIR Spectrophotometer

SIZE	DRAWING NUMBER	REV
D	NIR-Spec	02

SCALE N/A SHEET 1 OF 3

DWG NO	SH
NIR-Spec	2

REVISION HISTORY

REV	DESCRIPTION	DATE	APPROVED
	SEE SHEET 1		

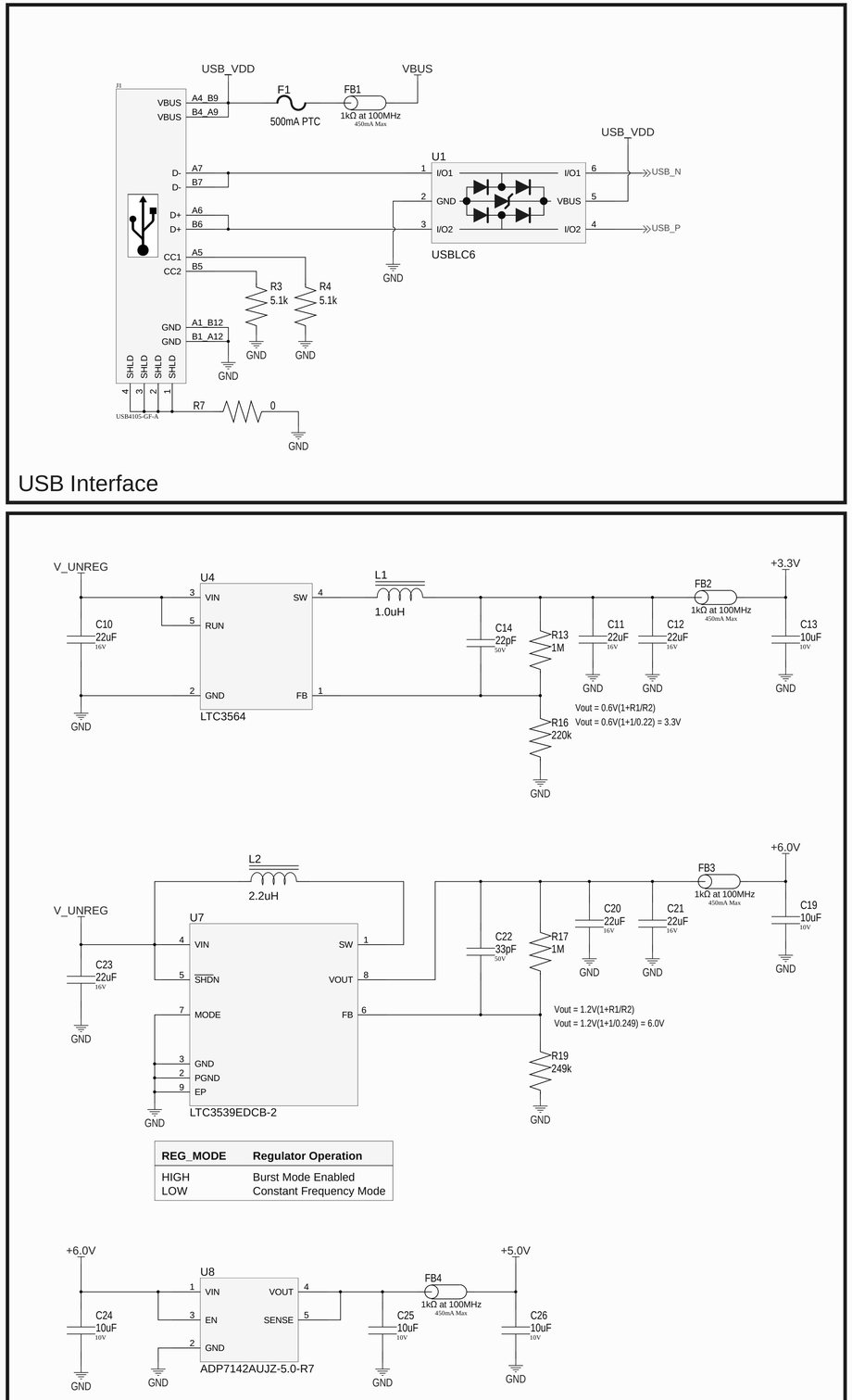

SIZE	DRAWING NUMBER	REV
D	NIR-Spec	02
SCALE ~		SHEET 2 OF 3

DWG NO	SH
NIR-Spec	3

REVISION HISTORY

REV	DESCRIPTION	DATE	APPROVED
	SEE SHEET 1		

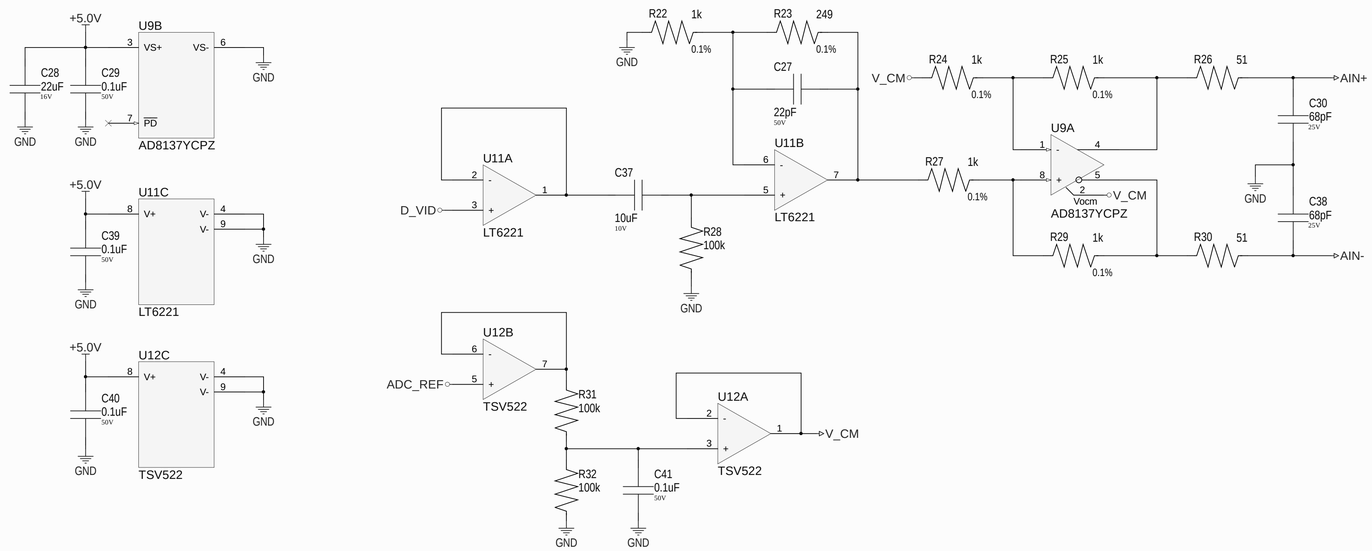

Sensor Analog Front End

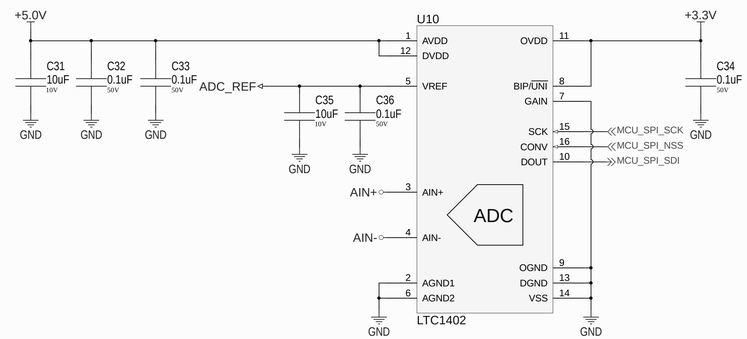

Note: A rising edge at CONV will trigger a conversion, after which the ADC will output a series of 13 bits, first the REFRDY bit then MSB to LSB on each SCK rising

Analog to Digital Differential Converter

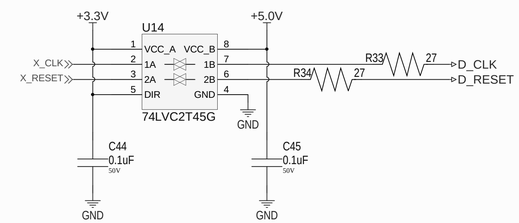

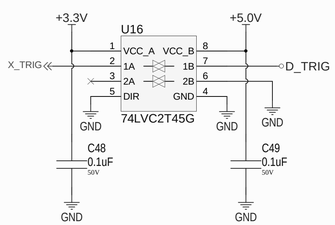

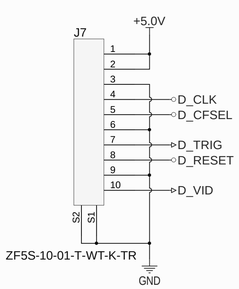

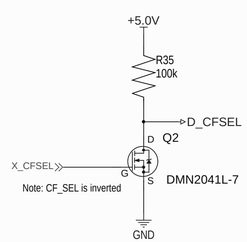

Note: CF_SEL is inverted

D_CFSEL	Feedback Capacitance	Detector Operation
HIGH	Cf = 0.5pF	High Gain
LOW	Cf = 10.0pF	High Dynamic Range

Sensor Interface

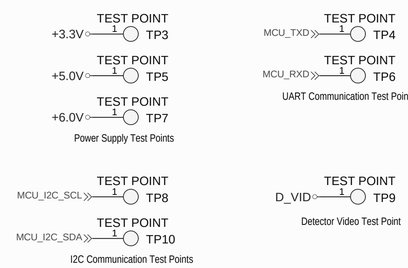

Test Points

Space for Rent

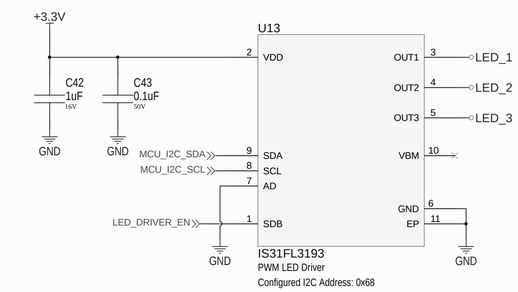

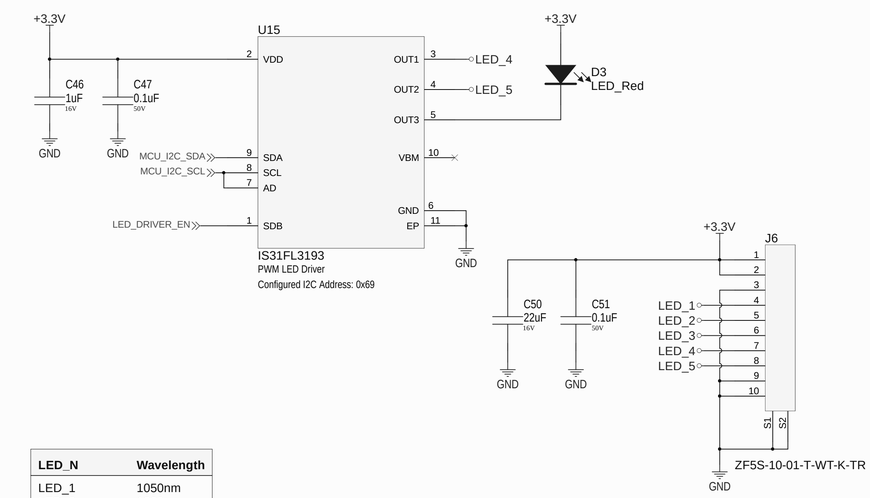

LED_N	Wavelength
LED_1	1050nm
LED_2	1200nm
LED_3	1300nm
LED_4	1550nm
LED_5	1650nm

Light Source Interface

SIZE	DRAWING NUMBER	REV
D	NIR-Spec	02
SCALE –		SHEET 3 OF 3