DWG NO	SH
Volta-Interface	1

REVISION HISTORY

REV	DESCRIPTION	DATE	APPROVED
-	-	-	-
-	-	-	-
-	-	-	-

1. INTERPRET PER ASME Y14.100M.

2. PART NUMBERS SHOWN ARE FOR REFERENCE ONLY.

3. INFORMATION IN PARENTHESIS IS FOR REFERENCE ONLY.

4. UNLESS OTHERWISE SPECIFIED,

   A. RESISTOR VALUES ARE IN OHMS.

   B. CAPACITOR VALUES ARE IN MICROFARADS.

   C. INDUCTOR VALUES ARE IN MICROHENRIES.

5. FOR SEPARATE PARTS LIST, SEE Volta-Interface-BOM_(01).xlsx

MATERIAL:

THIRD ANGLE PROJECTION

DO NOT SCALE DRAWING

UNLESS OTHERWISE SPECIFIED, DIMENSIONS ARE IN

TOLERANCES:
.X +/- 0.1
.XX +/- 0.01
.XXX +/- 0.001

ALL SHEETS ARE THE SAME REVISION STATUS

DFTG	K. KIDD	-
ENG	K. KIDD	-
MECH	*	*
MFG	*	*

TITLE:

SCHEMATIC, CCA,
Volta Interface
Front Panel Assembly

SIZE	DRAWING NUMBER	REV
D	Volta-Interface	01

SCALE N/A

SHEET 1 OF 3

DWG NO	SH
Volta-Interface	2

REVISION HISTORY

REV	DESCRIPTION	DATE	APPROVED
	SEE SHEET 1		

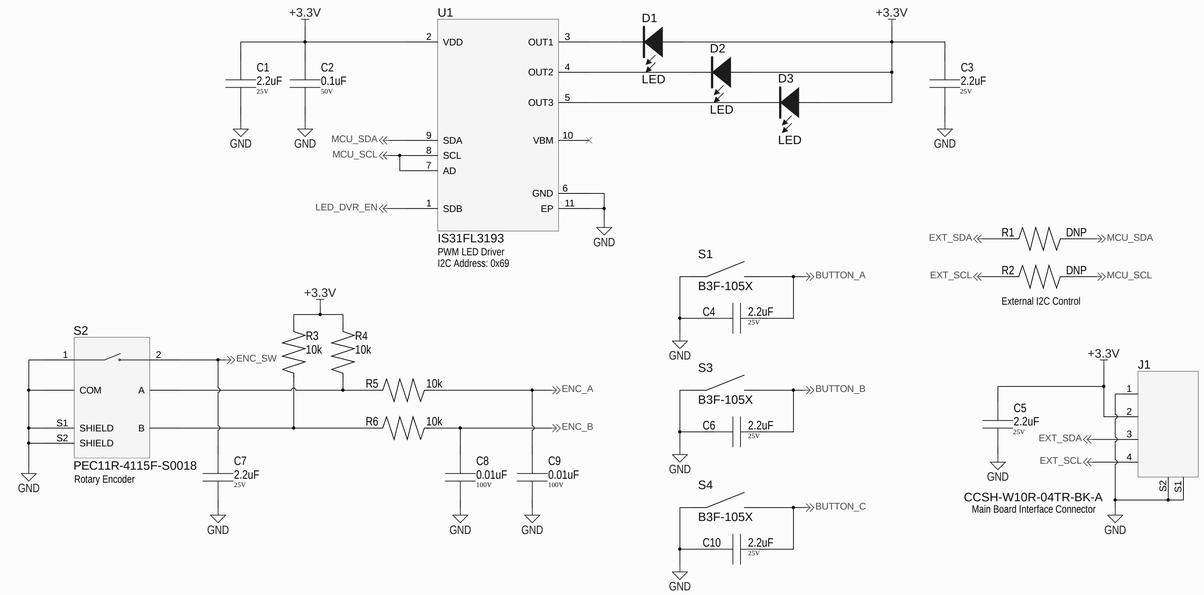

User Interface

Space for Rent

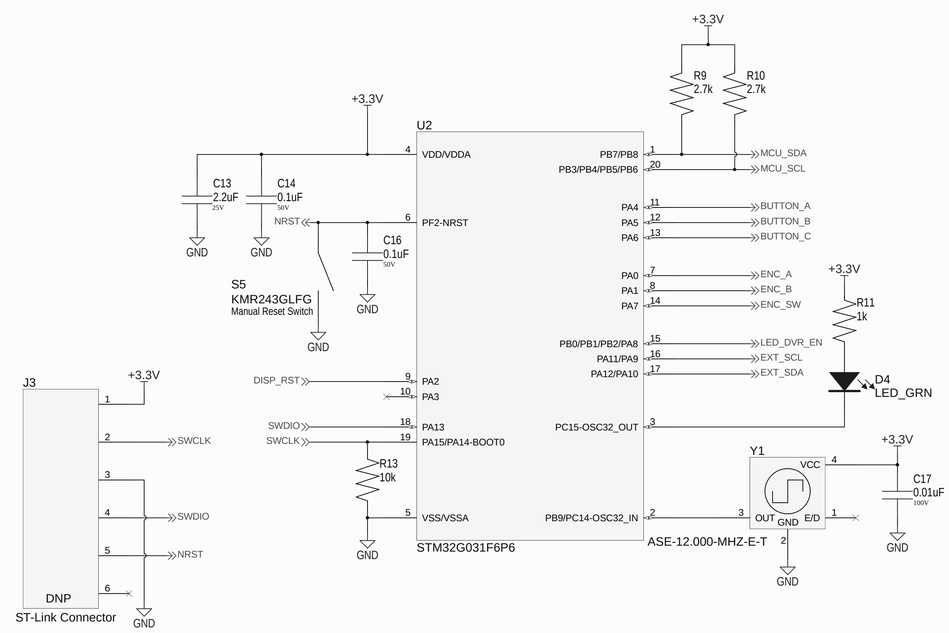

STM32G031F6P6 Microcontroller Unit

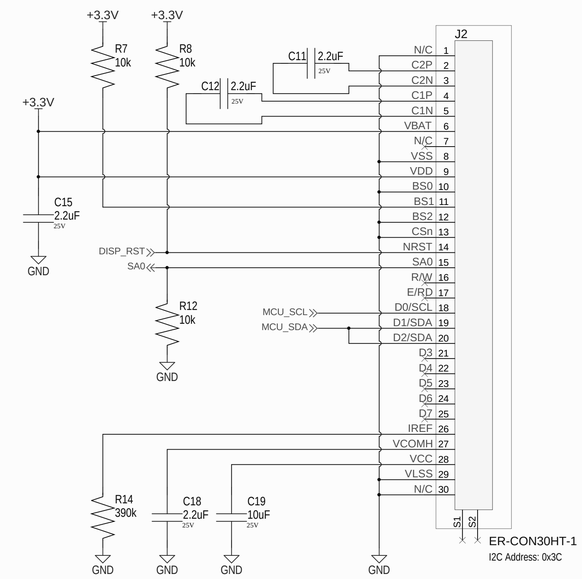

OLED Display Interface

SIZE	DRAWING NUMBER	REV
D	Volta-Interface	01
SCALE –		SHEET 2 OF 3