DWG NO	SH
Volta	1

REVISION HISTORY

REV	DESCRIPTION	DATE	APPROVED
01	INITIAL PROTOTYPE DESIGN	08/11/22	-
-	-	-	-
-	-	-	-

1. INTERPRET PER ASME Y14.100M.

2. PART NUMBERS SHOWN ARE FOR REFERENCE ONLY.

3. INFORMATION IN PARENTHESIS IS FOR REFERENCE ONLY.

4. UNLESS OTHERWISE SPECIFIED,

   A. RESISTOR VALUES ARE IN OHMS.

   B. CAPACITOR VALUES ARE IN MICROFARADS.

   C. INDUCTOR VALUES ARE IN MICROHENRIES.

5. FOR SEPARATE PARTS LIST, SEE Volta-BOM_(02).xlsx

MATERIAL:

THIRD ANGLE PROJECTION

DO NOT SCALE DRAWING

UNLESS OTHERWISE SPECIFIED, DIMENSIONS ARE IN

TOLERANCES:
.X +/- 0.1
.XX +/- 0.01
.XXX +/- 0.001

ALL SHEETS ARE THE SAME REVISION STATUS

DFTG	K. KIDD	09/17/22
ENG	K. KIDD	09/17/22
MECH	*	*
MFG	*	*

TITLE:

SCHEMATIC, CCA,
Volta
Lab Bench Supply

SIZE	DRAWING NUMBER	REV
D	Volta	02

SCALE N/A

SHEET 1 OF 2

DWG NO	SH
Volta	2

REVISION HISTORY

REV	DESCRIPTION	DATE	APPROVED
	SEE SHEET 1		

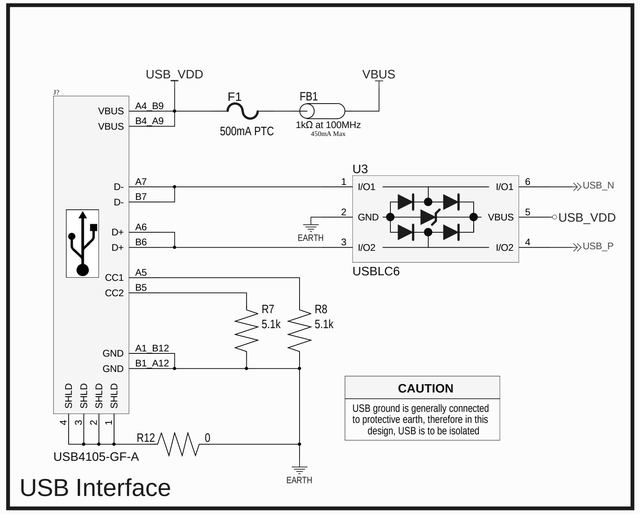

CAUTION

USB ground is generally connected to protective earth, therefore in this design, USB is to be isolated

USB Interface

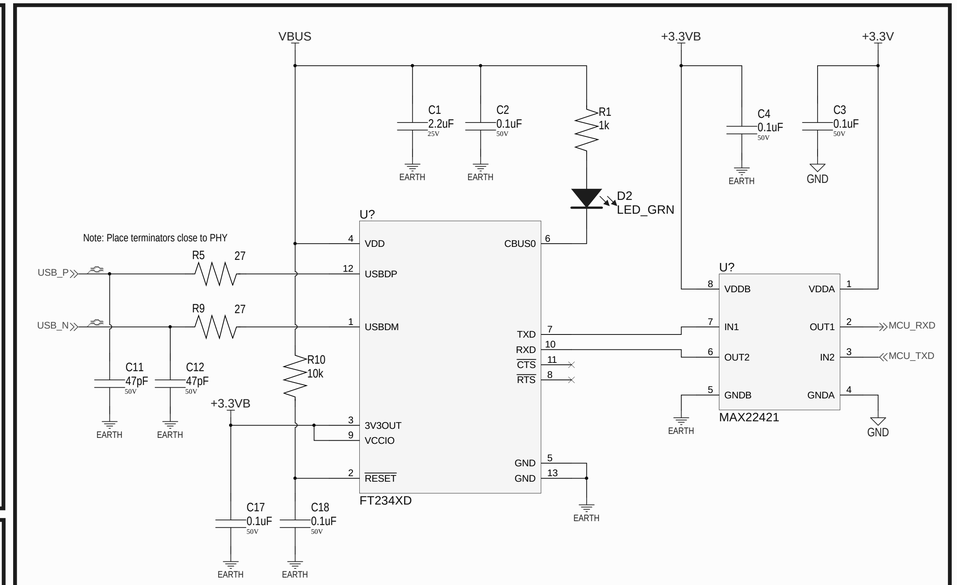

Isolated USB to UART Communication

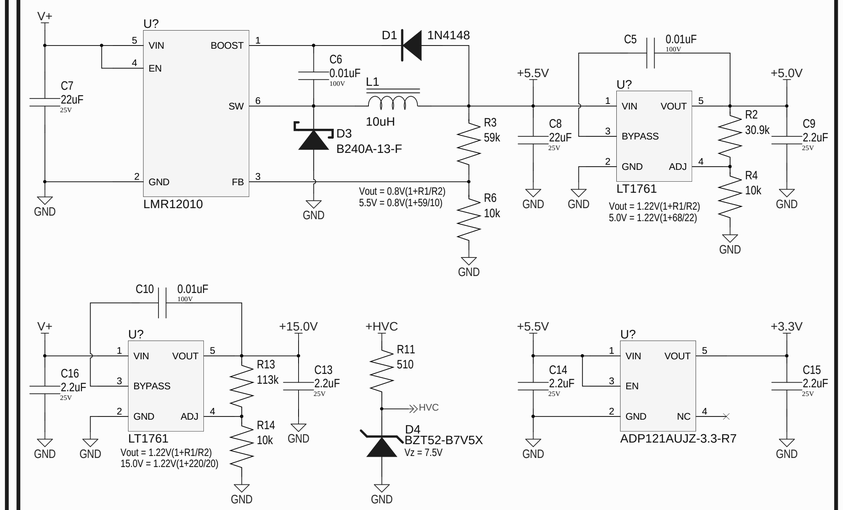

System Power Supplies

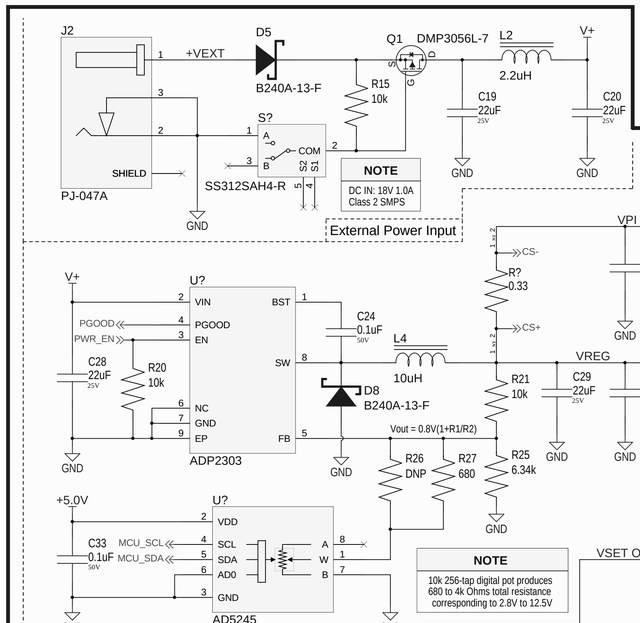

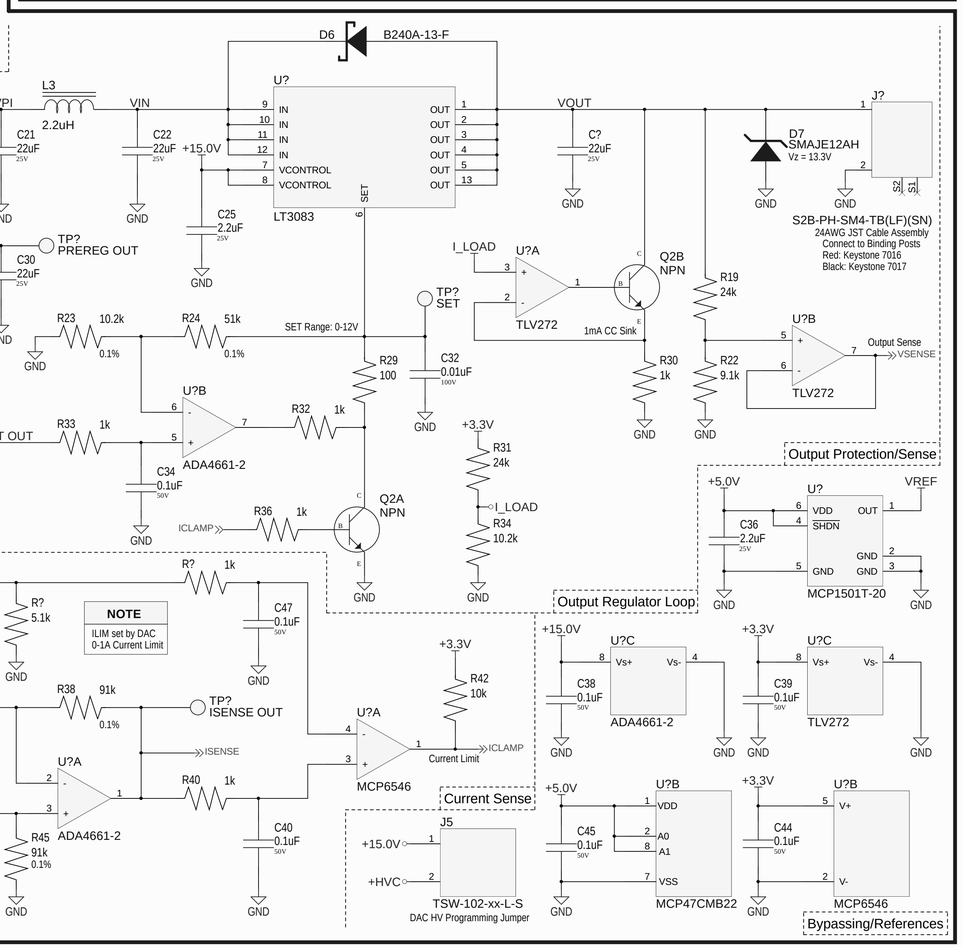

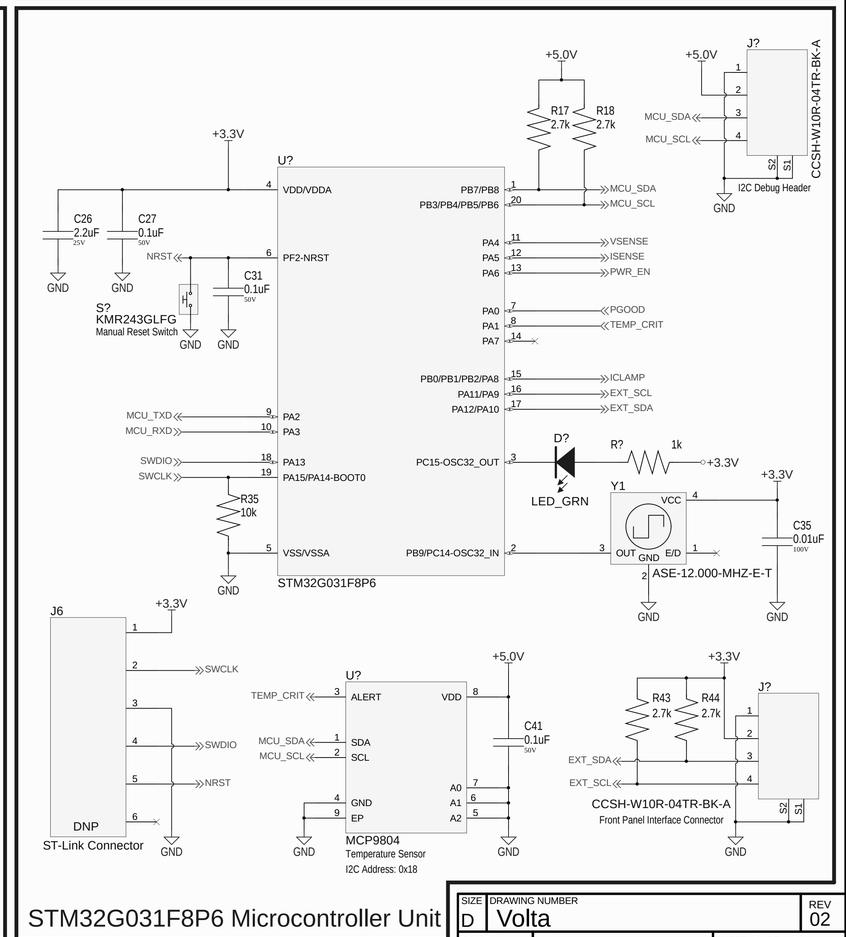

Power Supply Output and Control

STM32G031F8P6 Microcontroller Unit

SIZE	DRAWING NUMBER	REV
D	Volta	02
SCALE ~		SHEET 2 OF 2