DWG NO	SH
Volta	1

REVISION HISTORY

REV	DESCRIPTION	DATE	APPROVED
01	INITIAL PROTOTYPE DESIGN	08/11/2022	-
02	ANALOG REDSIGN	09/17/2022	-
A	DESIGN RELEASE	11/17/2022	-

1. INTERPRET PER ASME Y14.100M.

2. PART NUMBERS SHOWN ARE FOR REFERENCE ONLY.

3. INFORMATION IN PARENTHESIS IS FOR REFERENCE ONLY.

4. UNLESS OTHERWISE SPECIFIED,

   A. RESISTOR VALUES ARE IN OHMS.

   B. CAPACITOR VALUES ARE IN MICROFARADS.

   C. INDUCTOR VALUES ARE IN MICROHENRIES.

5. FOR SEPARATE PARTS LIST, SEE Volta-BOM_(A).xlsx

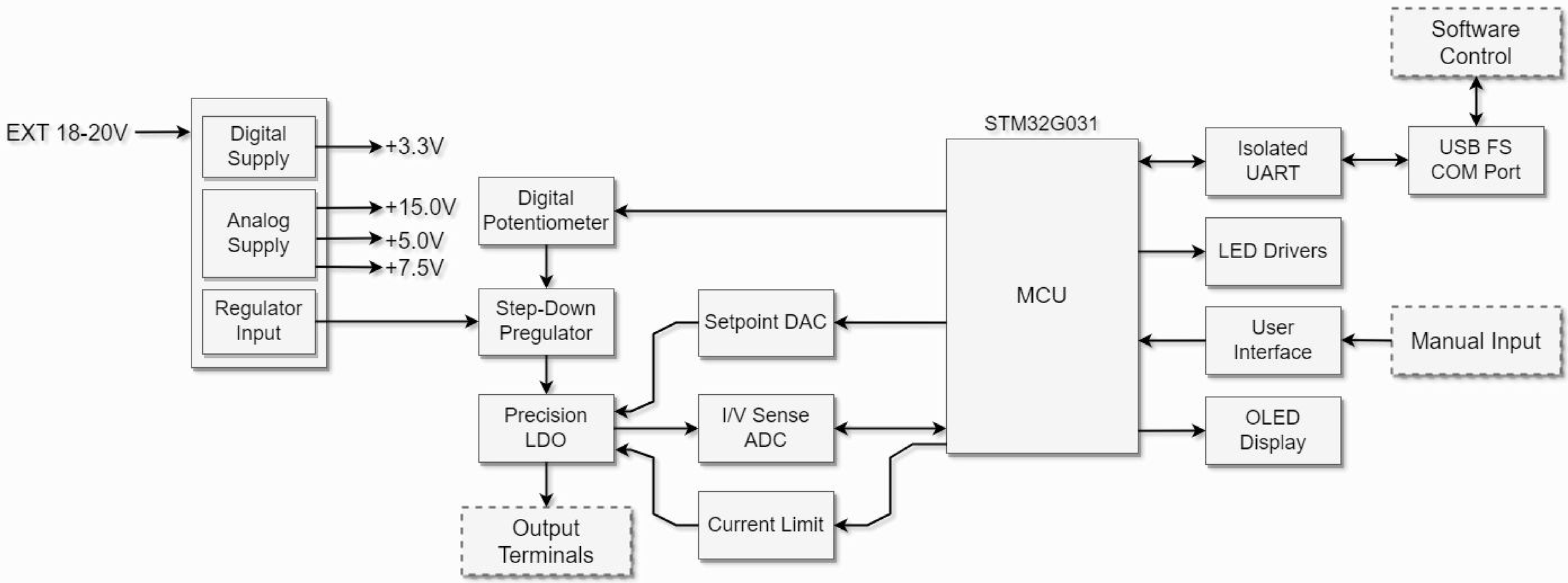

MATERIAL:

DO NOT SCALE DRAWING

UNLESS OTHERWISE SPECIFIED, DIMENSIONS ARE IN

TOLERANCES:
.X +/- 0.1
.XX +/- 0.01
.XXX +/- 0.001

THIRD ANGLE PROJECTION

ALL SHEETS ARE THE SAME REVISION STATUS

DFTG	K. KIDD	11/17/2022
ENG	K. KIDD	11/17/2022
MECH	*	*
MFG	*	*

TITLE:

SCHEMATIC, CCA,
Volta
Lab Bench Supply

SIZE	DRAWING NUMBER	REV
D	Volta	A

SCALE N/A

SHEET 1 OF 2

DWG NO	SH
Volta	2

REVISION HISTORY

REV	DESCRIPTION	DATE	APPROVED
	SEE SHEET 1		

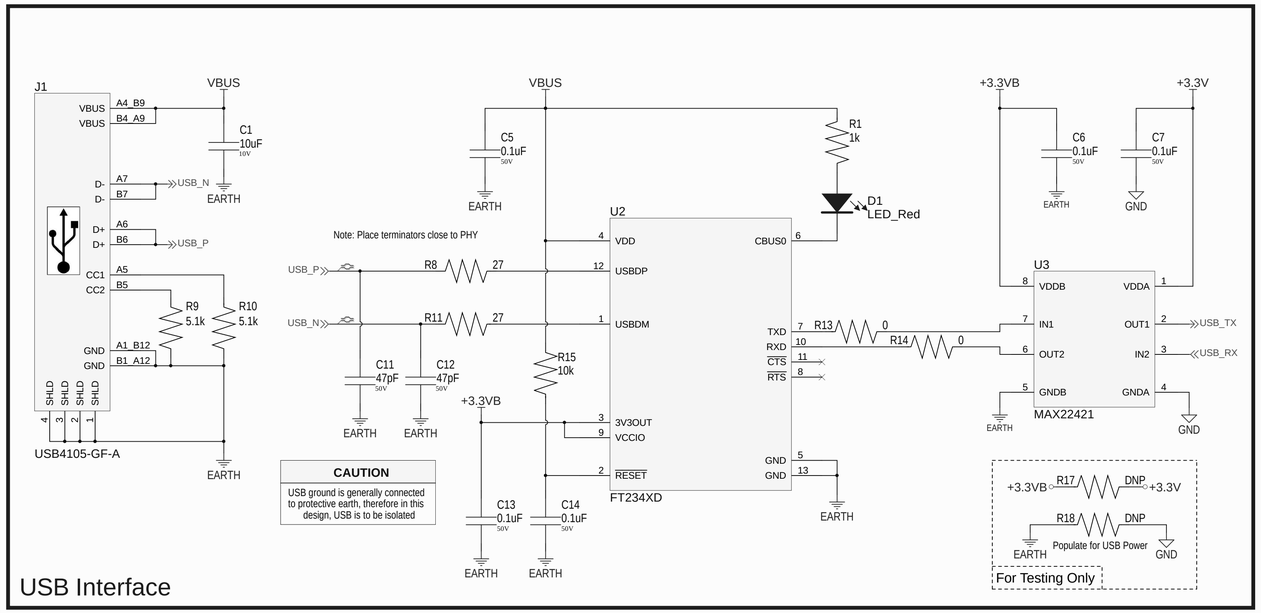

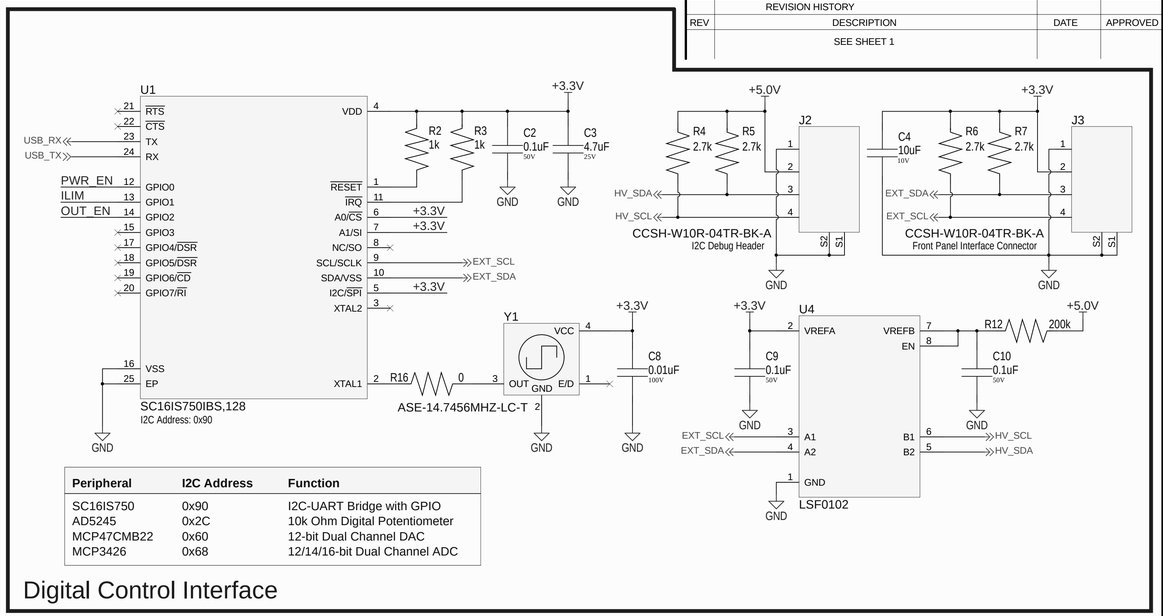

Peripheral	I2C Address	Function
SC16IS750	0x90	I2C-UART Bridge with GPIO
AD5245	0x2C	10k Ohm Digital Potentiometer
MCP47CMB22	0x60	12-bit Dual Channel DAC
MCP3426	0x68	12/14/16-bit Dual Channel ADC

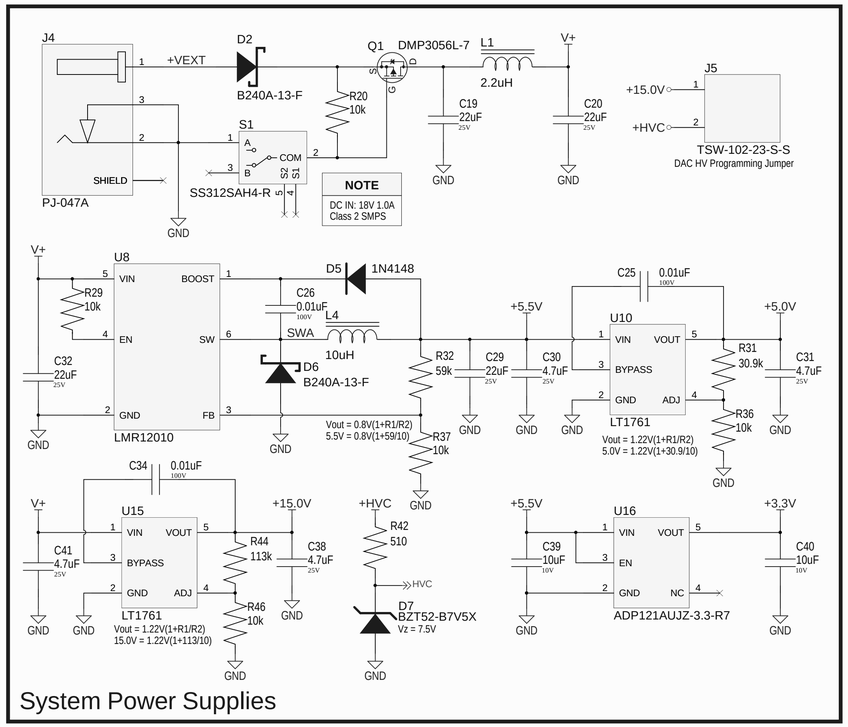

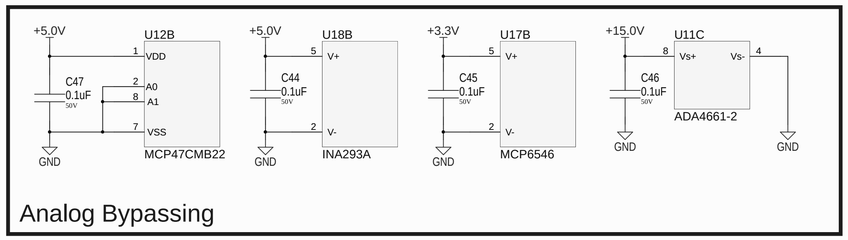

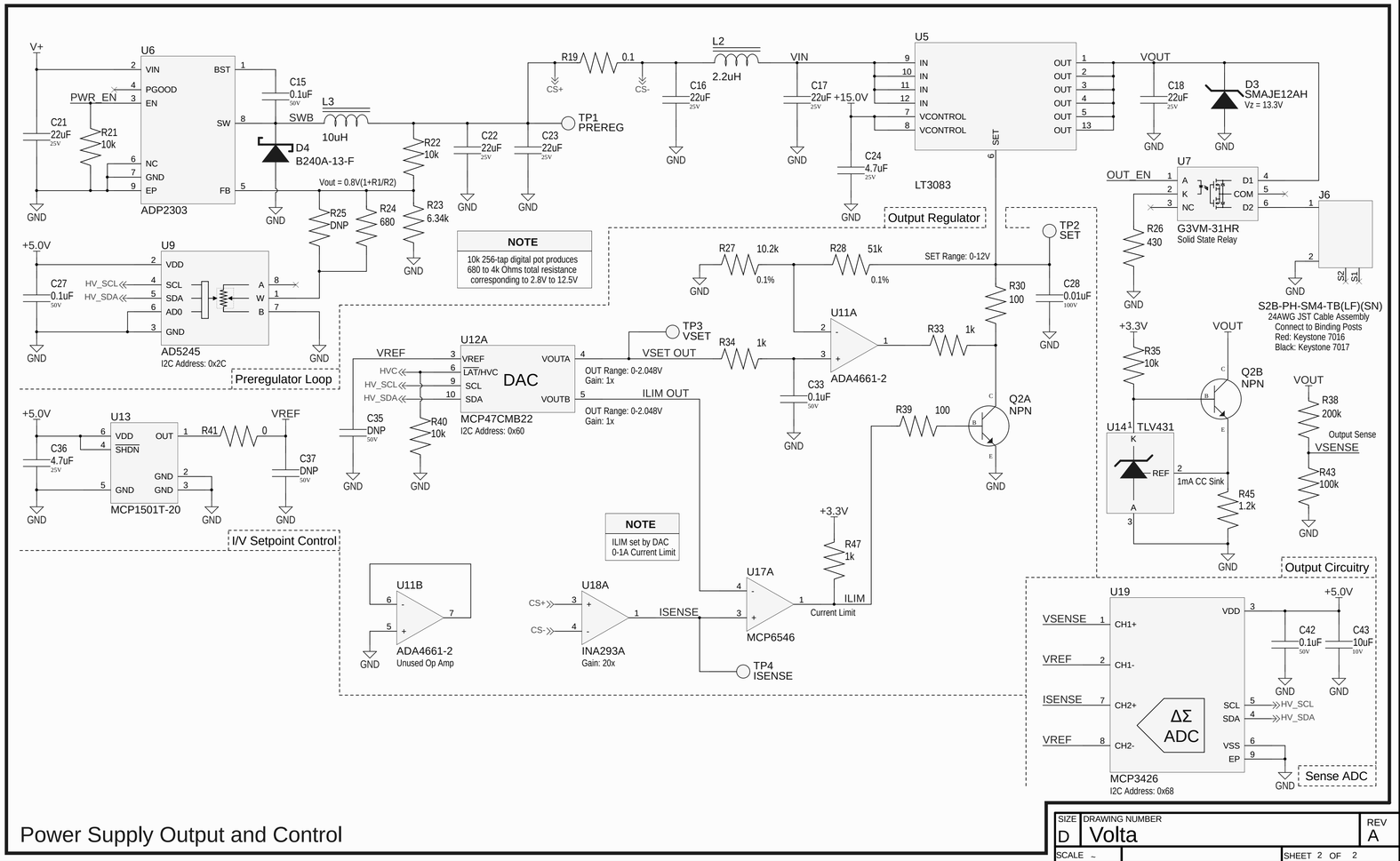

SIZE	DRAWING NUMBER	REV
D	Volta	A
SCALE ~		SHEET 2 OF 2