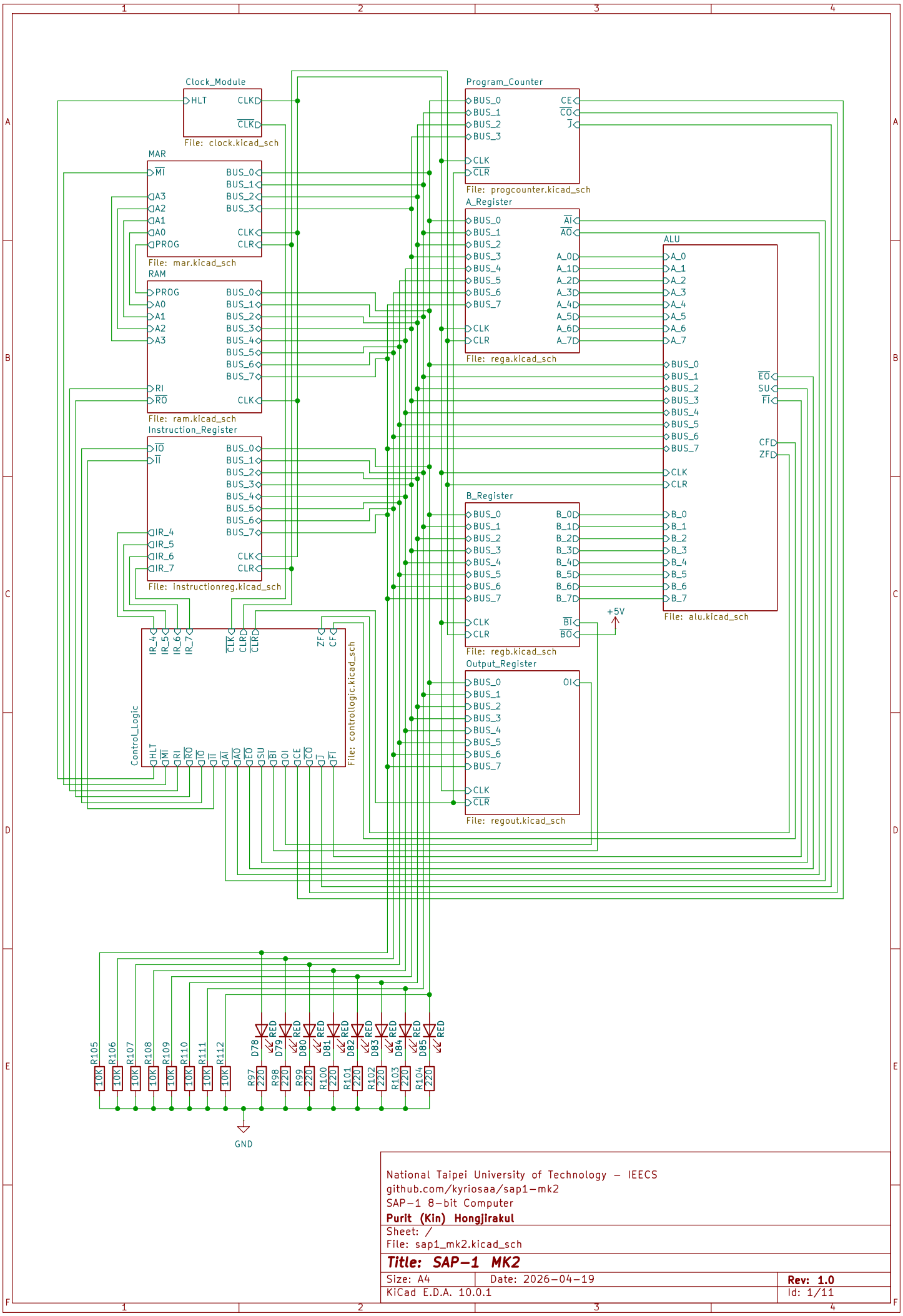

National Taipei University of Technology – IEECS
github.com/kyriosaa/sap1-mk2
SAP-1 8-bit Computer
Purit (Kin) Hongjirakul

Sheet: /
File: sap1_mk2.kicad_sch

Title: SAP-1 MK2

Size: A4	Date: 2026-04-19	**Rev: 1.0**
KiCad E.D.A. 10.0.1		Id: 1/11

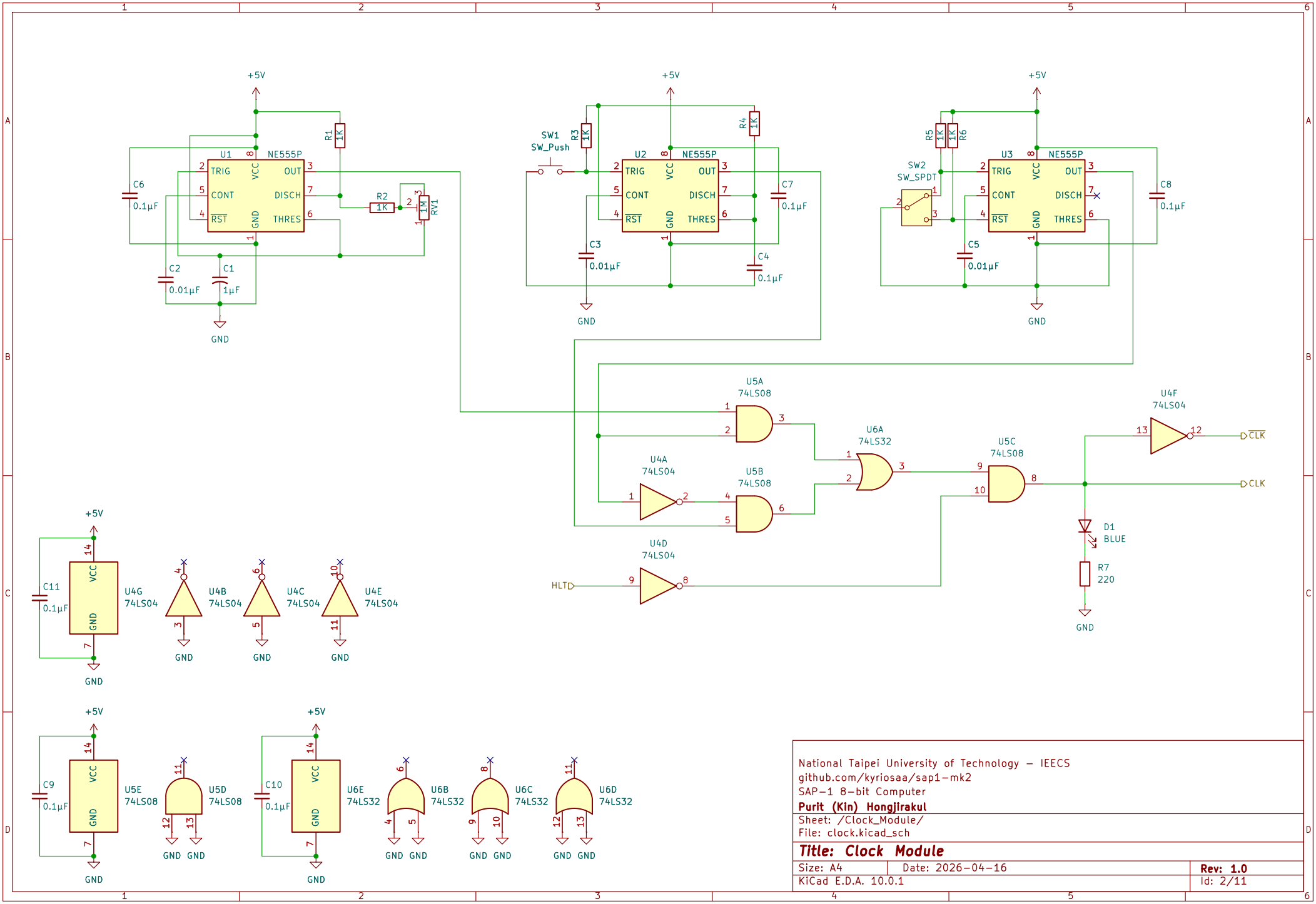

National Taipei University of Technology – IEECS
github.com/kyriosaa/sap1-mk2
SAP-1 8-bit Computer
Purit (Kin) Hongjirakul

Sheet: /Clock_Module/
File: clock.kicad_sch

Title: Clock Module

Size: A4	Date: 2026-04-16	**Rev: 1.0**
KiCad E.D.A. 10.0.1		Id: 2/11

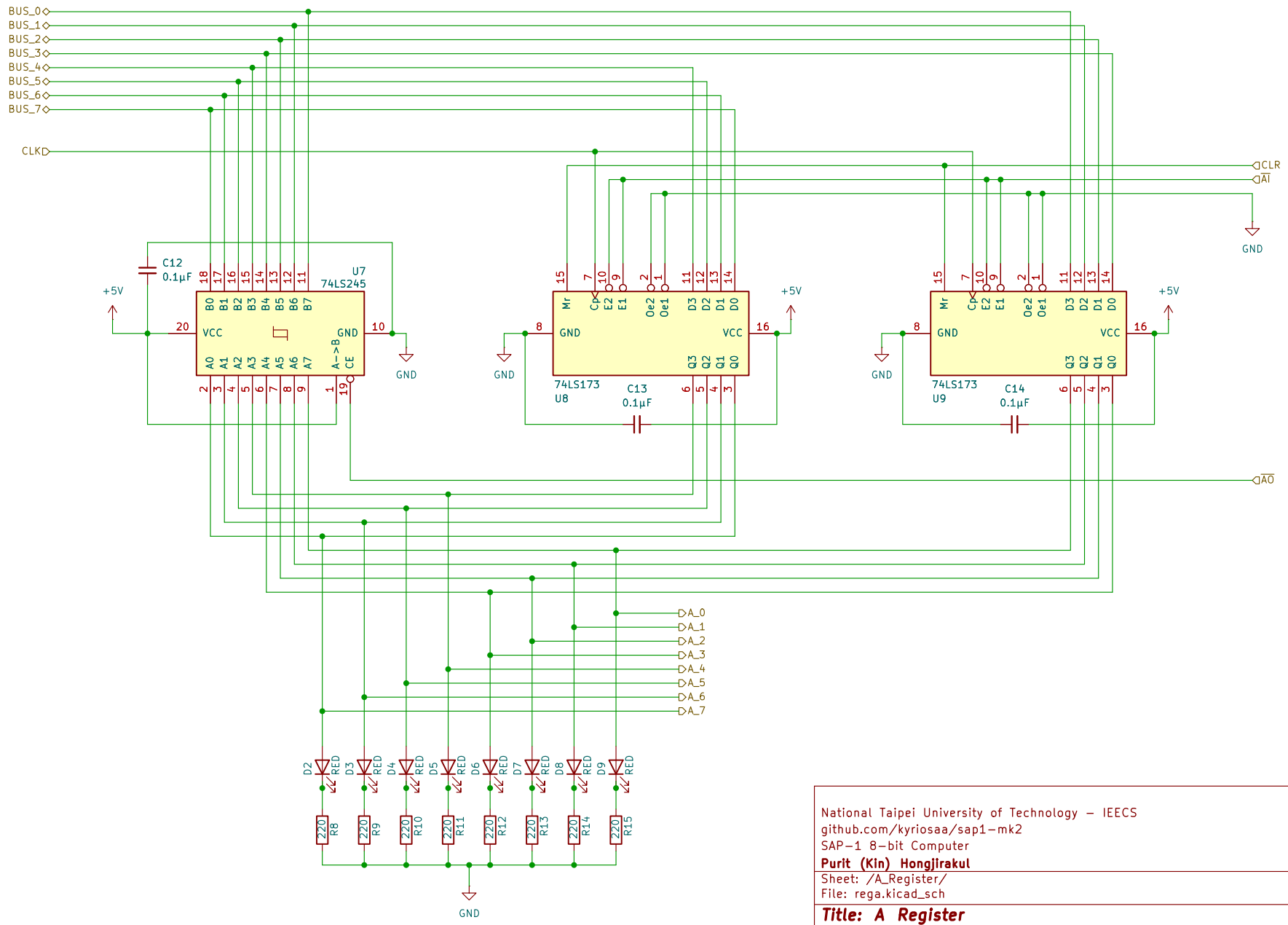

National Taipei University of Technology – IEECS
github.com/kyriosaa/sap1-mk2
SAP-1 8-bit Computer
Purit (Kin) Hongjirakul

Sheet: /A_Register/
File: rega.kicad_sch

Title: A Register

Size: A4	Date: 2026-04-16	**Rev: 1.0**
KiCad E.D.A. 10.0.1		Id: 3/11

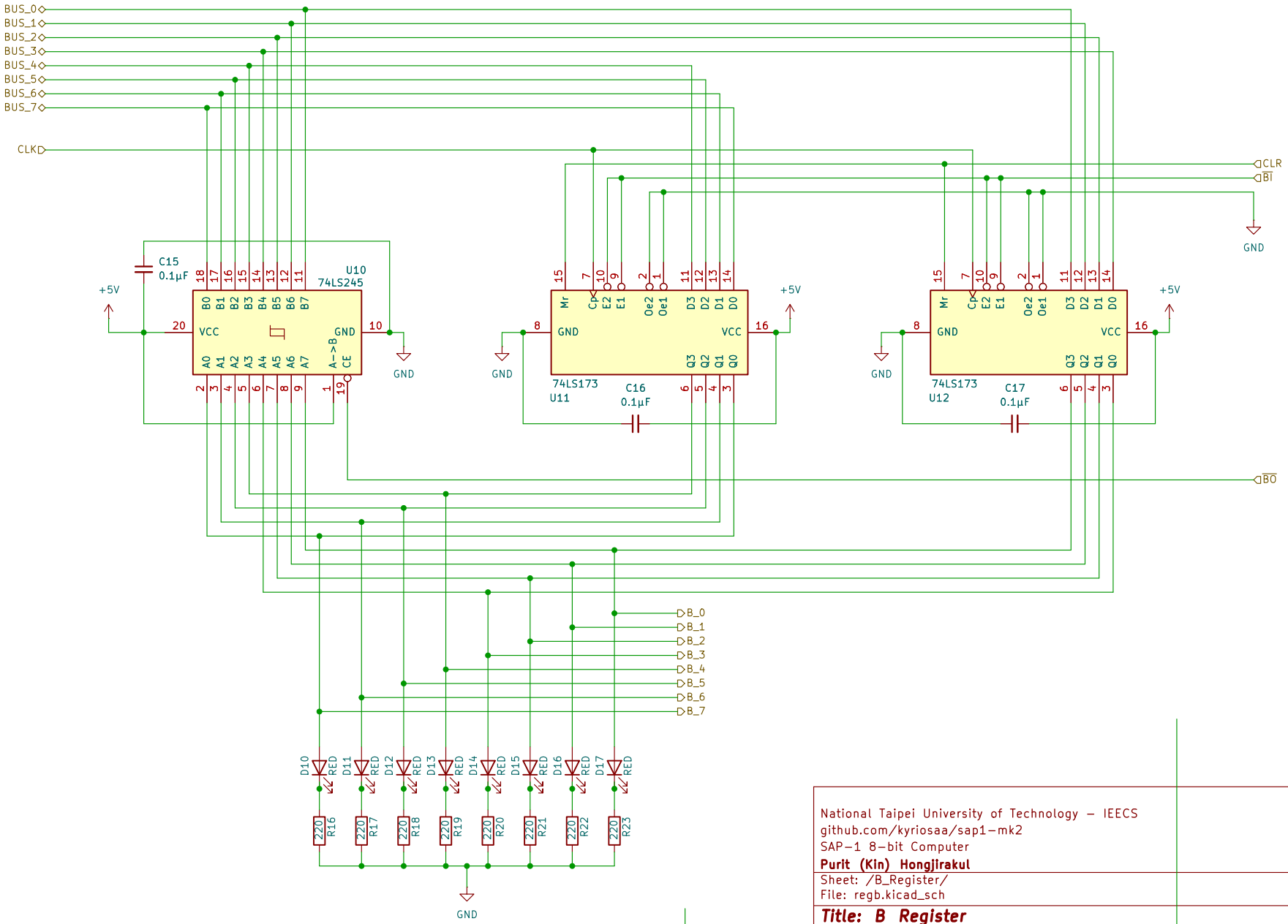

National Taipei University of Technology – IEECS
github.com/kyriosaa/sap1-mk2
SAP-1 8-bit Computer
Purit (Kin) Hongjirakul

Sheet: /B_Register/
File: regb.kicad_sch

Title: B Register

Size: A4	Date: 2026-04-16	**Rev: 1.0**
KiCad E.D.A. 10.0.1		Id: 4/11

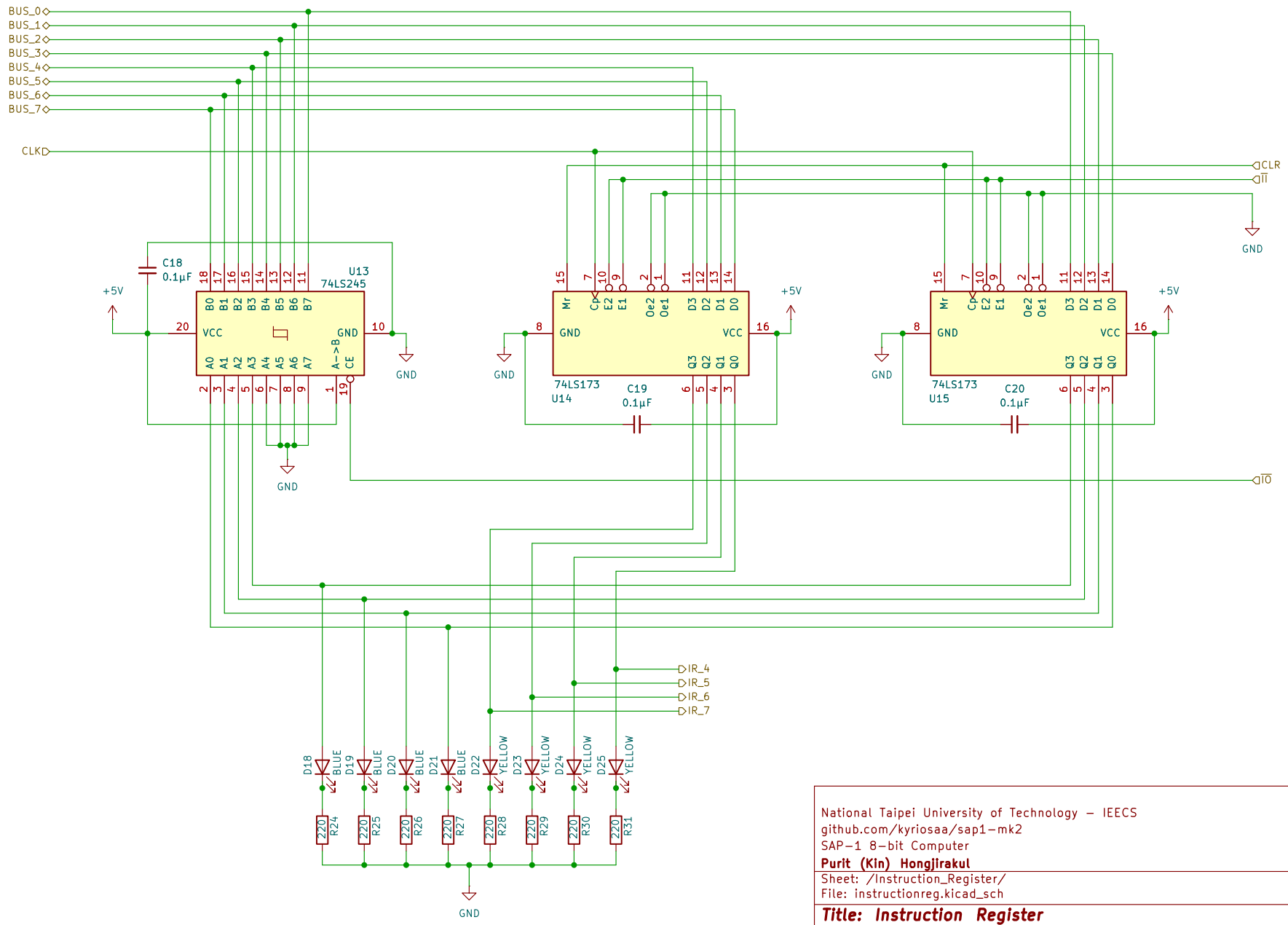

National Taipei University of Technology – IEECS
github.com/kyriosaa/sap1-mk2
SAP-1 8-bit Computer
Purit (Kin) Hongjirakul

Sheet: /Instruction_Register/
File: instructionreg.kicad_sch

Title: Instruction Register

Size: A4	Date: 2026-04-16	**Rev: 1.0**
KiCad E.D.A. 10.0.1		Id: 5/11

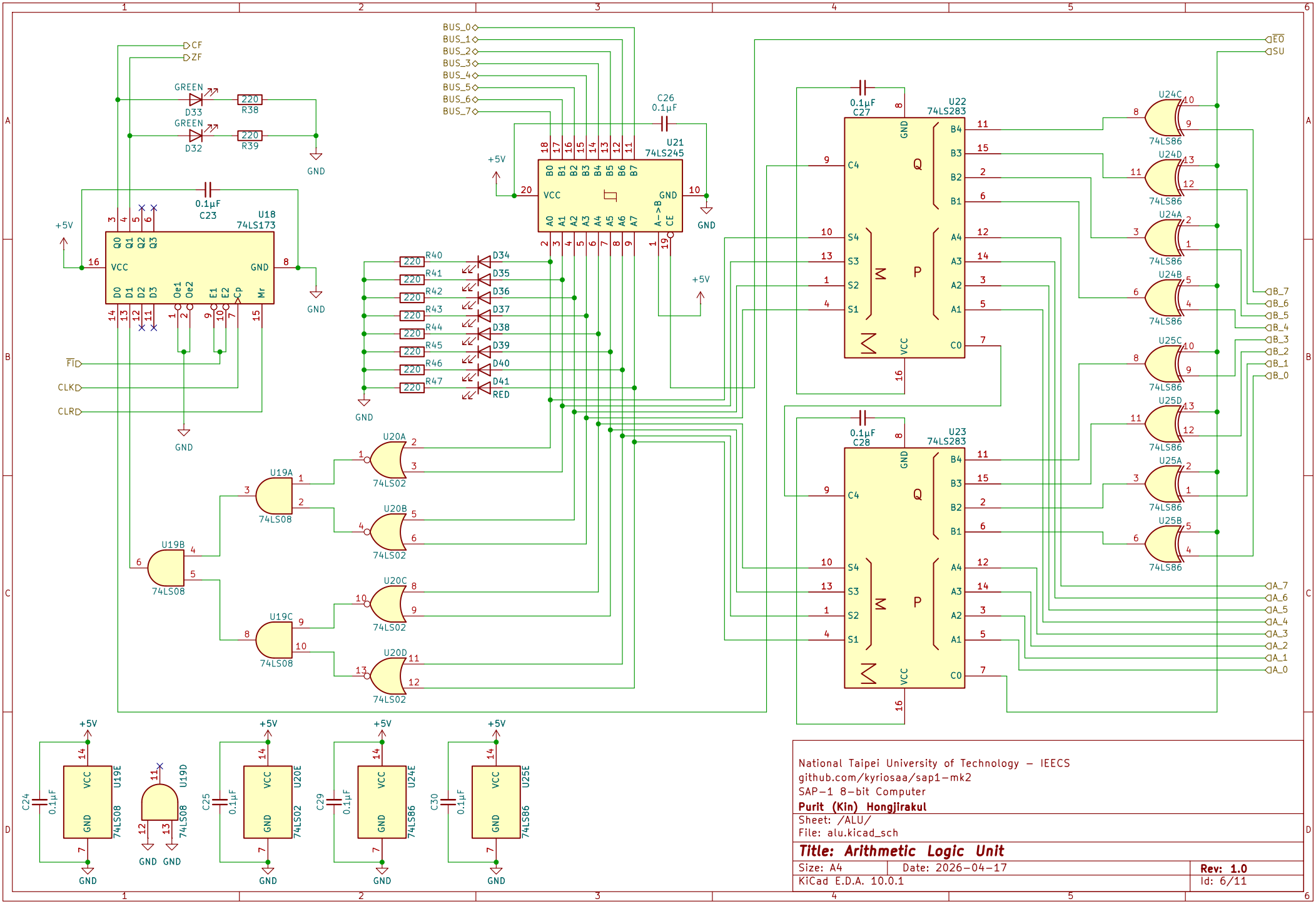

National Taipei University of Technology – IEECS
github.com/kyriosaa/sap1-mk2
SAP-1 8-bit Computer
Purit (Kin) Hongjirakul

Sheet: /ALU/
File: alu.kicad_sch

Title: Arithmetic Logic Unit

Size: A4	Date: 2026-04-17	**Rev: 1.0**
KiCad E.D.A. 10.0.1		Id: 6/11

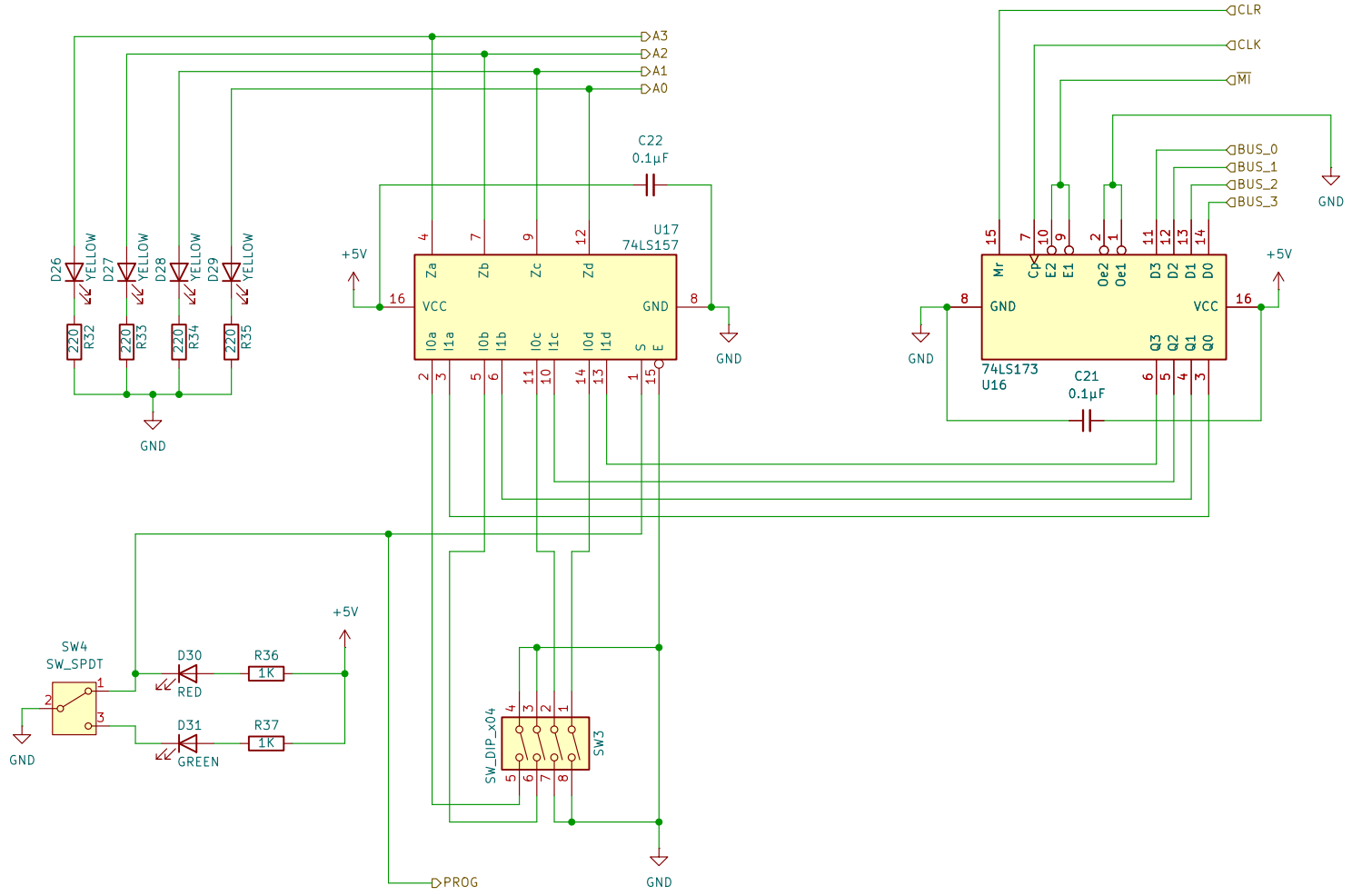

National Taipei University of Technology – IEECS
github.com/kyriosaa/sap1-mk2
SAP-1 8-bit Computer
Purit (Kin) Hongjirakul

Sheet: /MAR/
File: mar.kicad_sch

Title: Memory Address Register

Size: A4	Date: 2026-04-16	**Rev: 1.0**
KiCad E.D.A. 10.0.1		Id: 7/11

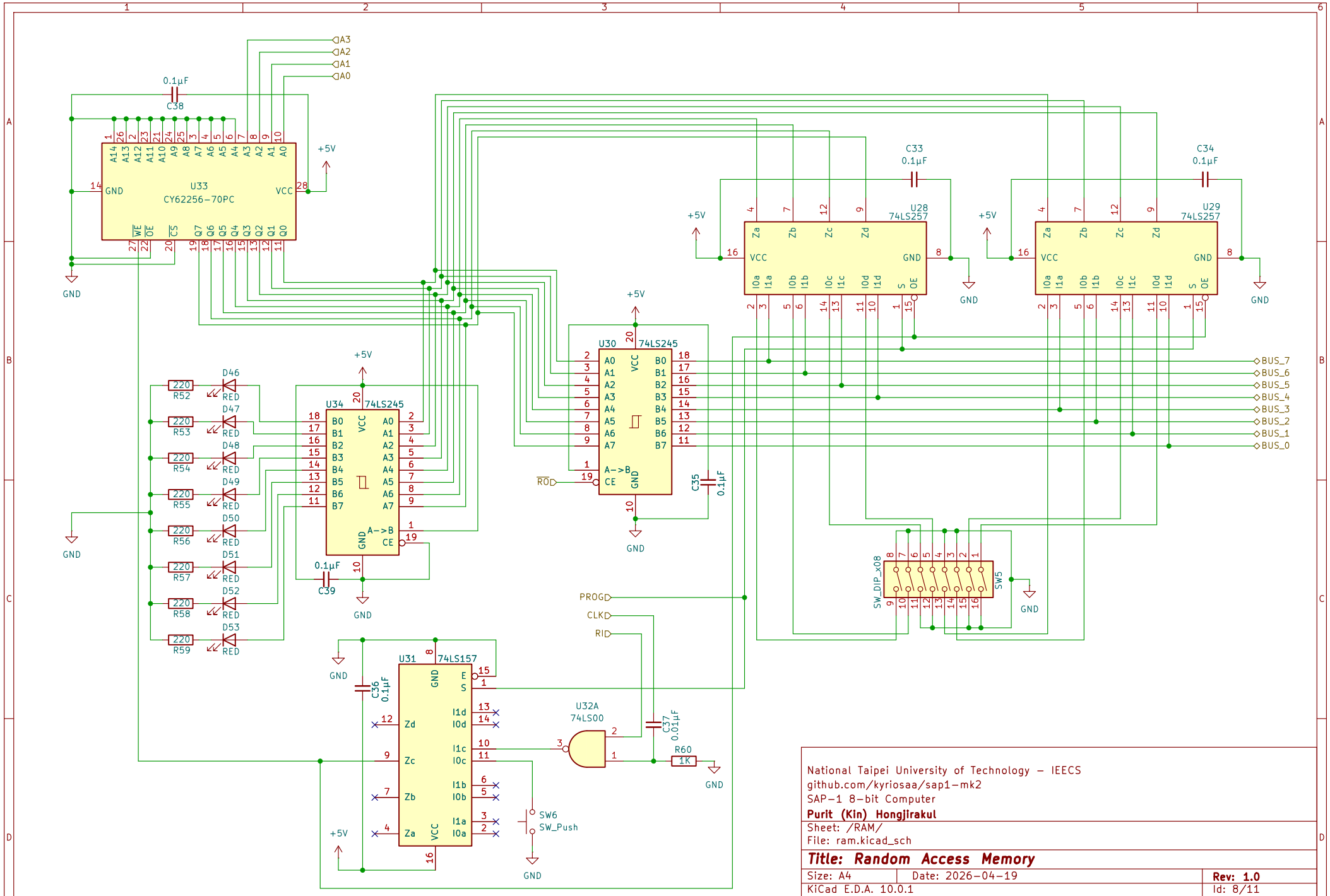

National Taipei University of Technology – IEECS
github.com/kyriosaa/sap1-mk2
SAP-1 8-bit Computer
Purit (Kin) Hongjirakul

Sheet: /RAM/
File: ram.kicad_sch

Title: Random Access Memory

Size: A4	Date: 2026-04-19	Rev: 1.0
KiCad E.D.A. 10.0.1		Id: 8/11

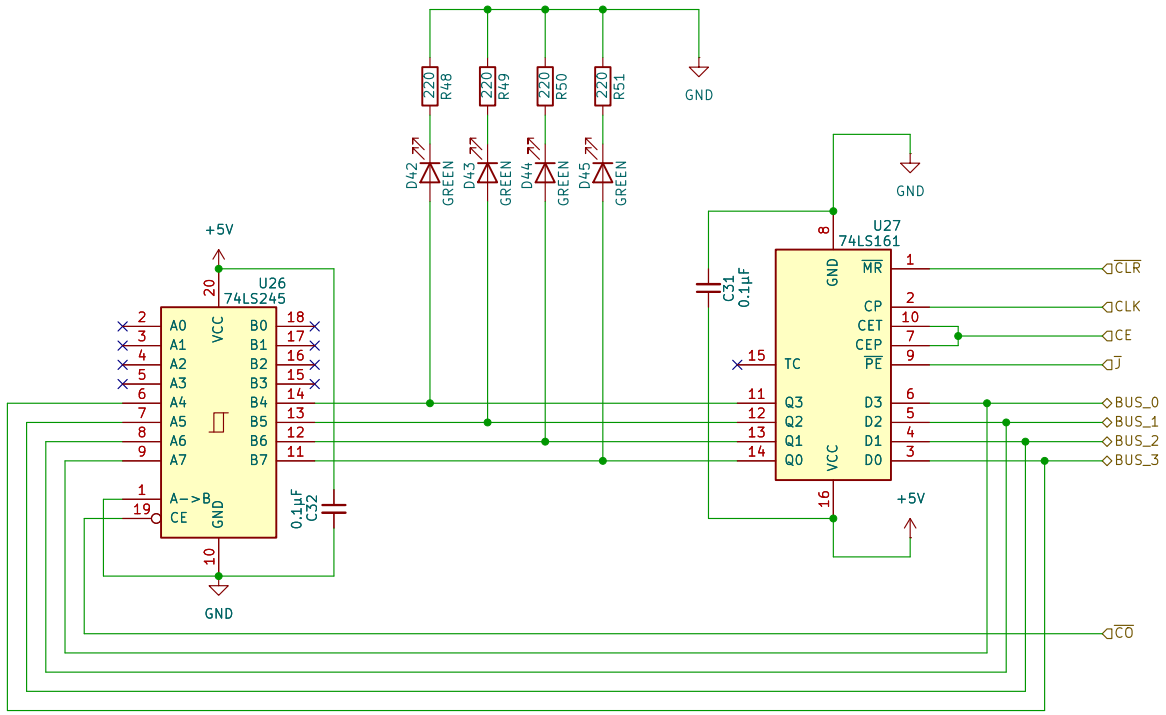

National Taipei University of Technology – IEECS
github.com/kyriosaa/sap1-mk2
SAP-1 8-bit Computer
Purit (Kin) Hongjirakul

Sheet: /Program_Counter/
File: progcounter.kicad_sch

Title: Program Counter

Size: A4	Date: 2026-04-17	**Rev: 1.0**
KiCad E.D.A. 10.0.1		Id: 9/11

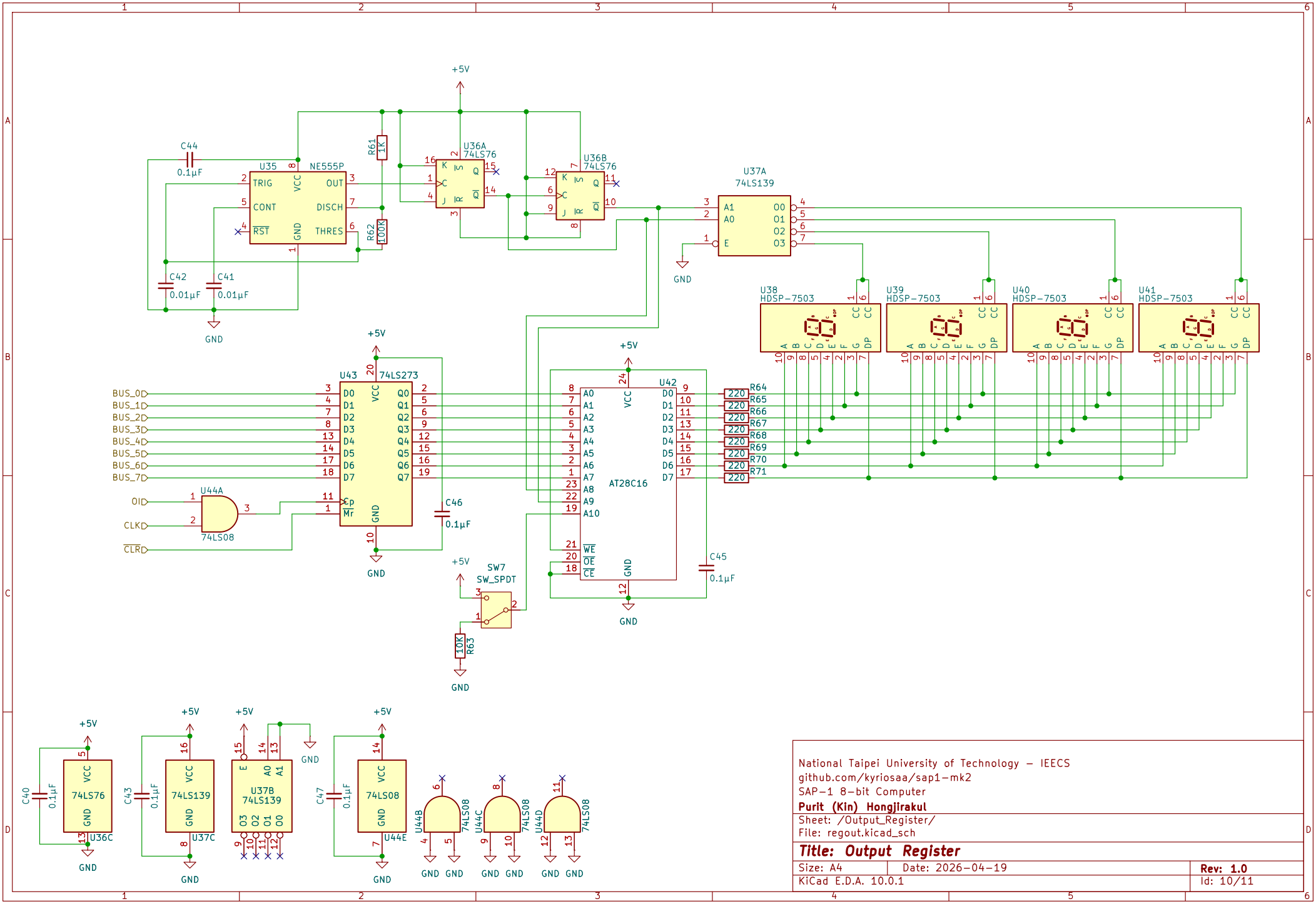
U35
NE555P
TRIG
CONT
RST
VCC
GND
OUT
DISCH
THRES
C44
0.1µF
C42
0.01µF
C41
0.01µF
R61
1K
R62
100K
U36A
74LS76
U36B
74LS76
U37A
74LS139
A1
A0
E
O0
O1
O2
O3
U38
HDSP-7503
U39
HDSP-7503
U40
HDSP-7503
U41
HDSP-7503
U43
74LS273
D0
D1
D2
D3
D4
D5
D6
D7
Q0
Q1
Q2
Q3
Q4
Q5
Q6
Q7
Cp
Mr
C46
0.1µF
BUS_0
BUS_1
BUS_2
BUS_3
BUS_4
BUS_5
BUS_6
BUS_7
OI
CLK
CLR
U44A
74LS08
U42
AT28C16
A0
A1
A2
A3
A4
A5
A6
A7
A8
A9
A10
WE
OE
CE
C45
0.1µF
R64
R65
R66
R67
R68
R69
R70
R71
220
SW7
SW_SPDT
R63
10K
+5V
GND
C40
0.1µF
U36C
C43
0.1µF
U37C
U37B
74LS139
C47
0.1µF
U44E
74LS08
U44B
U44C
U44D
National Taipei University of Technology – IEECS
github.com/kyriosaa/sap1-mk2
SAP-1 8-bit Computer
Purit (Kin) Hongjirakul
Sheet: /Output_Register/
File: regout.kicad_sch
Title: Output Register
Size: A4
Date: 2026-04-19
Rev: 1.0
KiCad E.D.A. 10.0.1
Id: 10/11

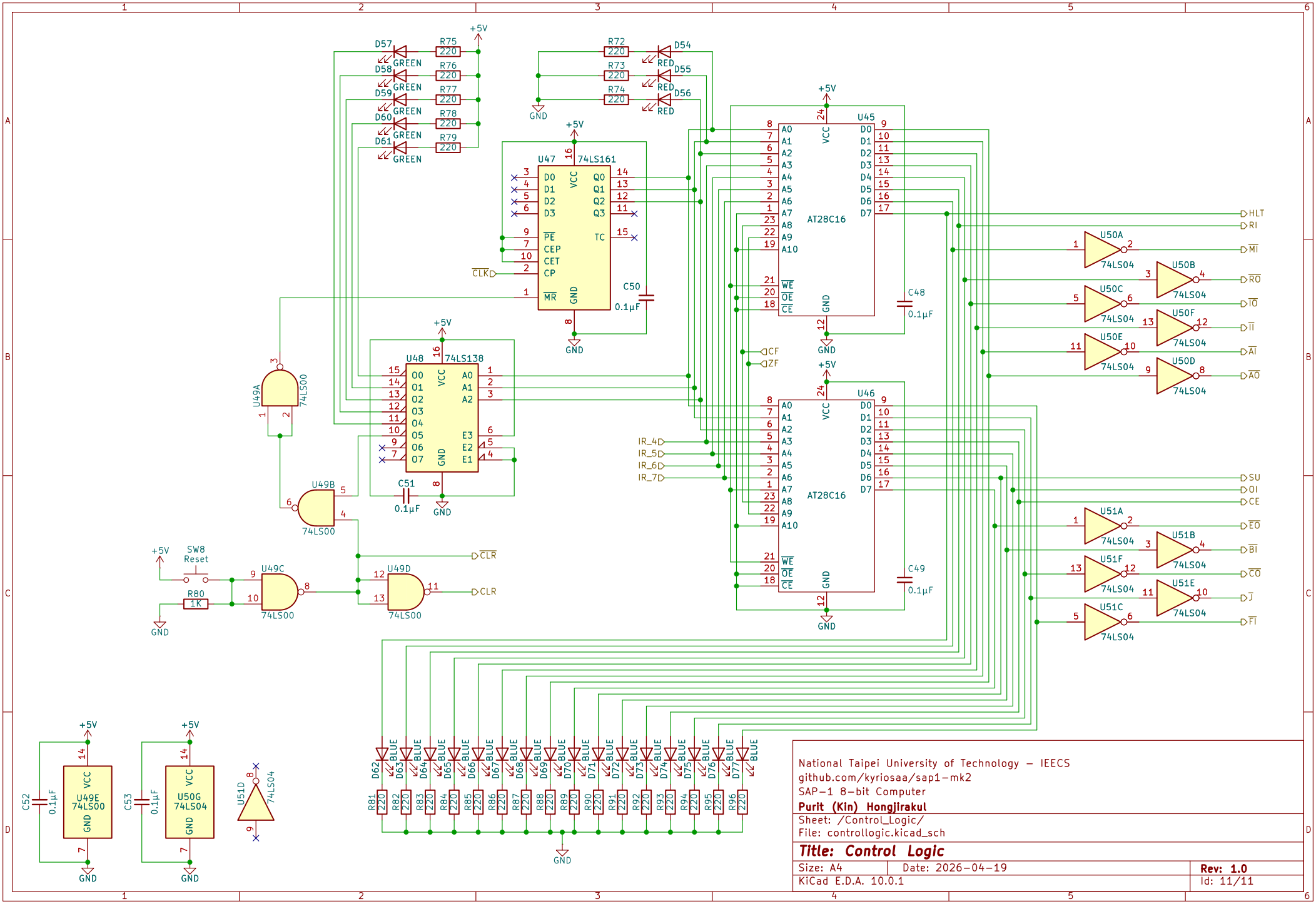
U47 74LS161
U48 74LS138
U45 AT28C16
U46 AT28C16
U49A 74LS00
U49B 74LS00
U49C 74LS00
U49D 74LS00
U49E 74LS00
U50A 74LS04
U50B 74LS04
U50C 74LS04
U50D 74LS04
U50E 74LS04
U50F 74LS04
U50G 74LS04
U51A 74LS04
U51B 74LS04
U51C 74LS04
U51D 74LS04
U51E 74LS04
U51F 74LS04
SW8 Reset
R80 1K
C50 0.1µF
C51 0.1µF
C48 0.1µF
C49 0.1µF
C52 0.1µF
C53 0.1µF
CLK
CLR
CF
ZF
IR_4
IR_5
IR_6
IR_7
HLT
RI
MI
RO
IO
II
AI
AO
SU
OI
CE
EO
BI
CO
J
FI
+5V
GND
National Taipei University of Technology – IEECS
github.com/kyriosaa/sap1-mk2
SAP-1 8-bit Computer
Purit (Kin) Hongjirakul
Sheet: /Control_Logic/
File: controllogic.kicad_sch
Title: Control Logic
Size: A4
Date: 2026-04-19
Rev: 1.0
KiCad E.D.A. 10.0.1
Id: 11/11