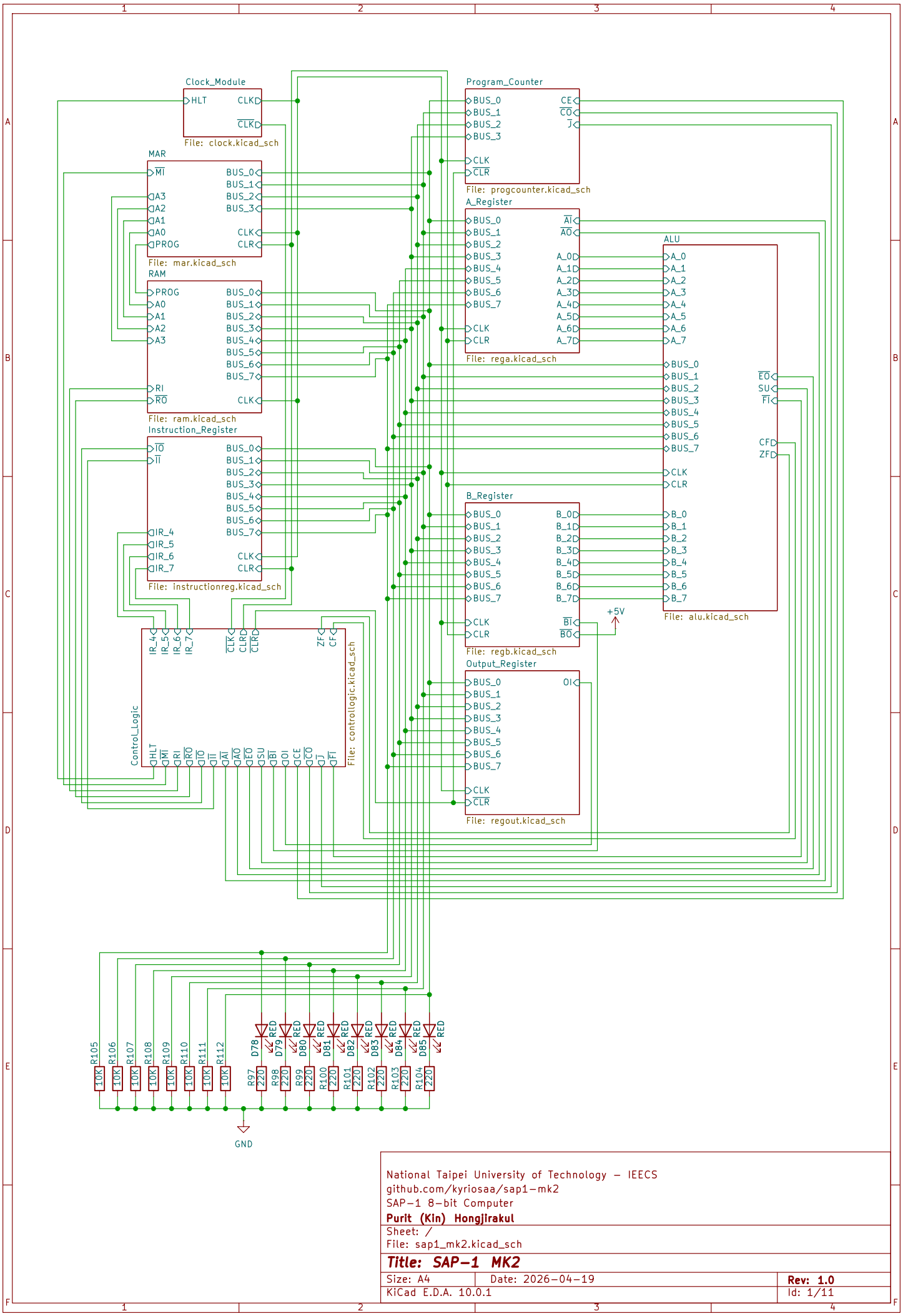

National Taipei University of Technology – IEECS
github.com/kyriosaa/sap1-mk2
SAP-1 8-bit Computer
Purit (Kin) Hongjirakul

Sheet: /
File: sap1_mk2.kicad_sch

Title: SAP-1 MK2

Size: A4	Date: 2026-04-19	**Rev: 1.0**
KiCad E.D.A. 10.0.1		Id: 1/11

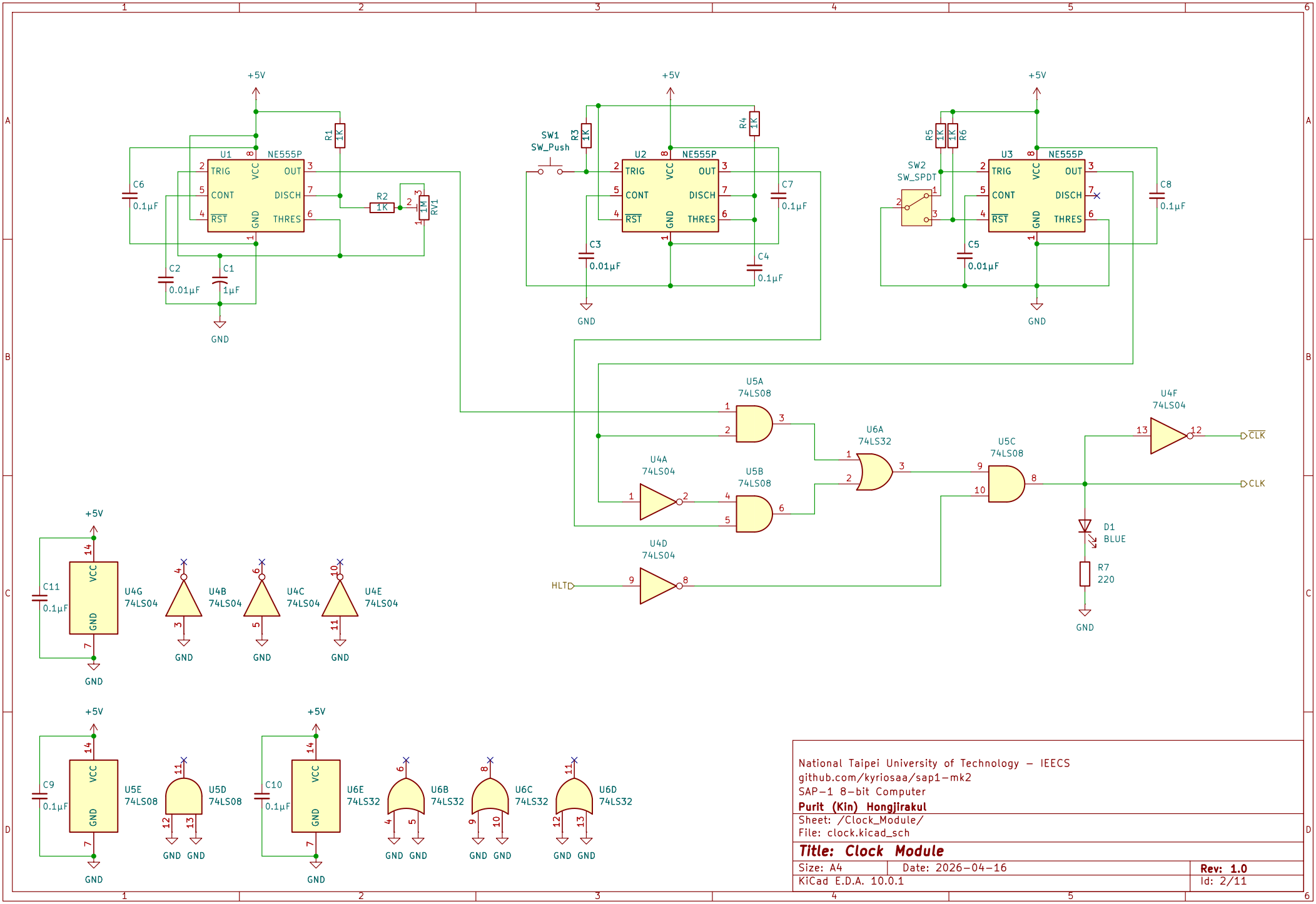

National Taipei University of Technology – IEECS
github.com/kyriosaa/sap1-mk2
SAP-1 8-bit Computer
Purit (Kin) Hongjirakul

Sheet: /Clock_Module/
File: clock.kicad_sch

Title: Clock Module

Size: A4	Date: 2026-04-16	**Rev: 1.0**
KiCad E.D.A. 10.0.1		Id: 2/11

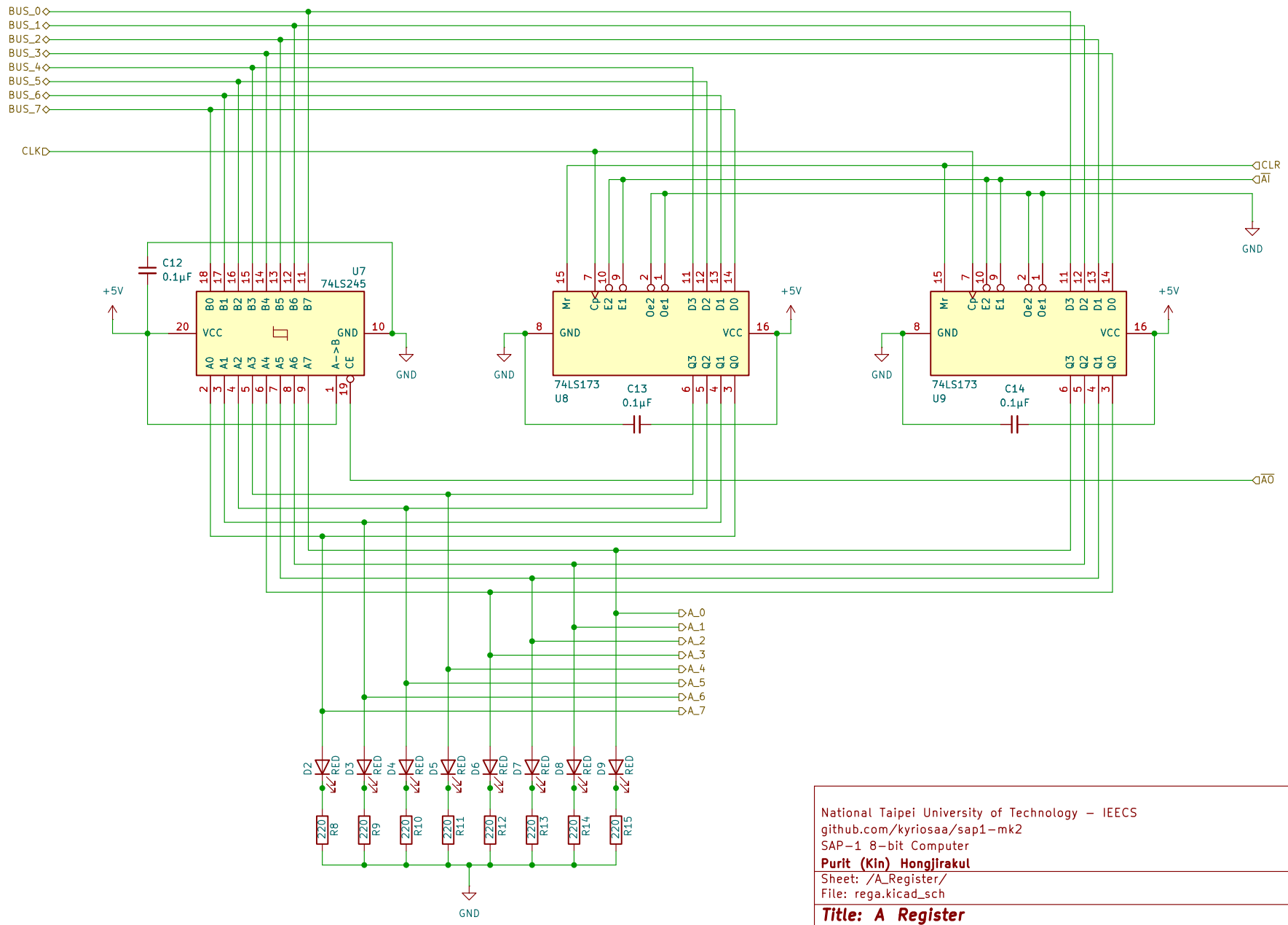

National Taipei University of Technology – IEECS
github.com/kyriosaa/sap1-mk2
SAP-1 8-bit Computer
Purit (Kin) Hongjirakul

Sheet: /A_Register/
File: rega.kicad_sch

Title: A Register

Size: A4	Date: 2026-04-16	**Rev: 1.0**
KiCad E.D.A. 10.0.1		Id: 3/11

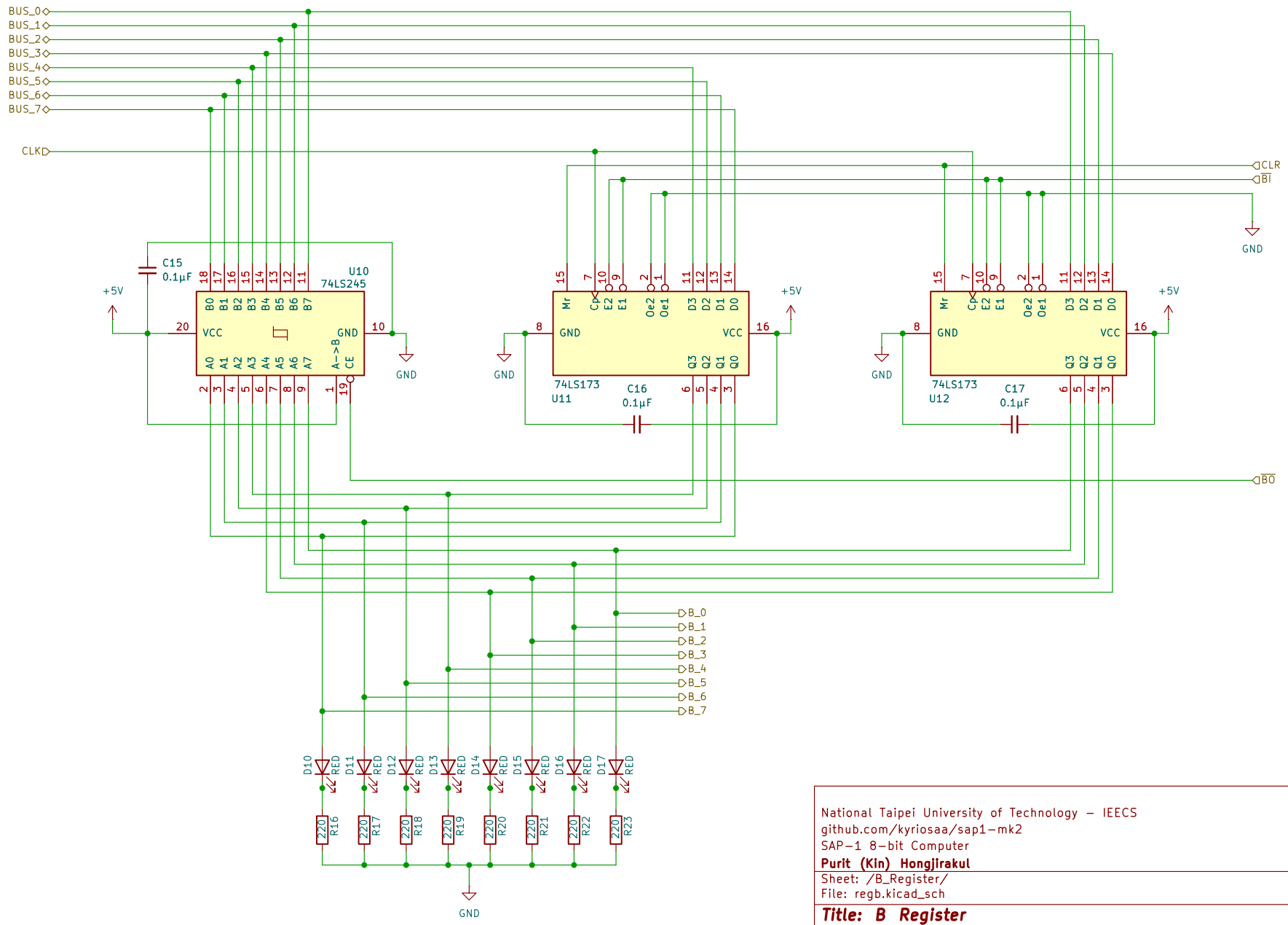

National Taipei University of Technology – IEECS
github.com/kyriosaa/sap1-mk2
SAP-1 8-bit Computer
Purit (Kin) Hongjirakul

Sheet: /B_Register/
File: regb.kicad_sch

Title: B Register

Size: A4	Date: 2026-04-16	**Rev: 1.0**
KiCad E.D.A. 10.0.1		Id: 4/11

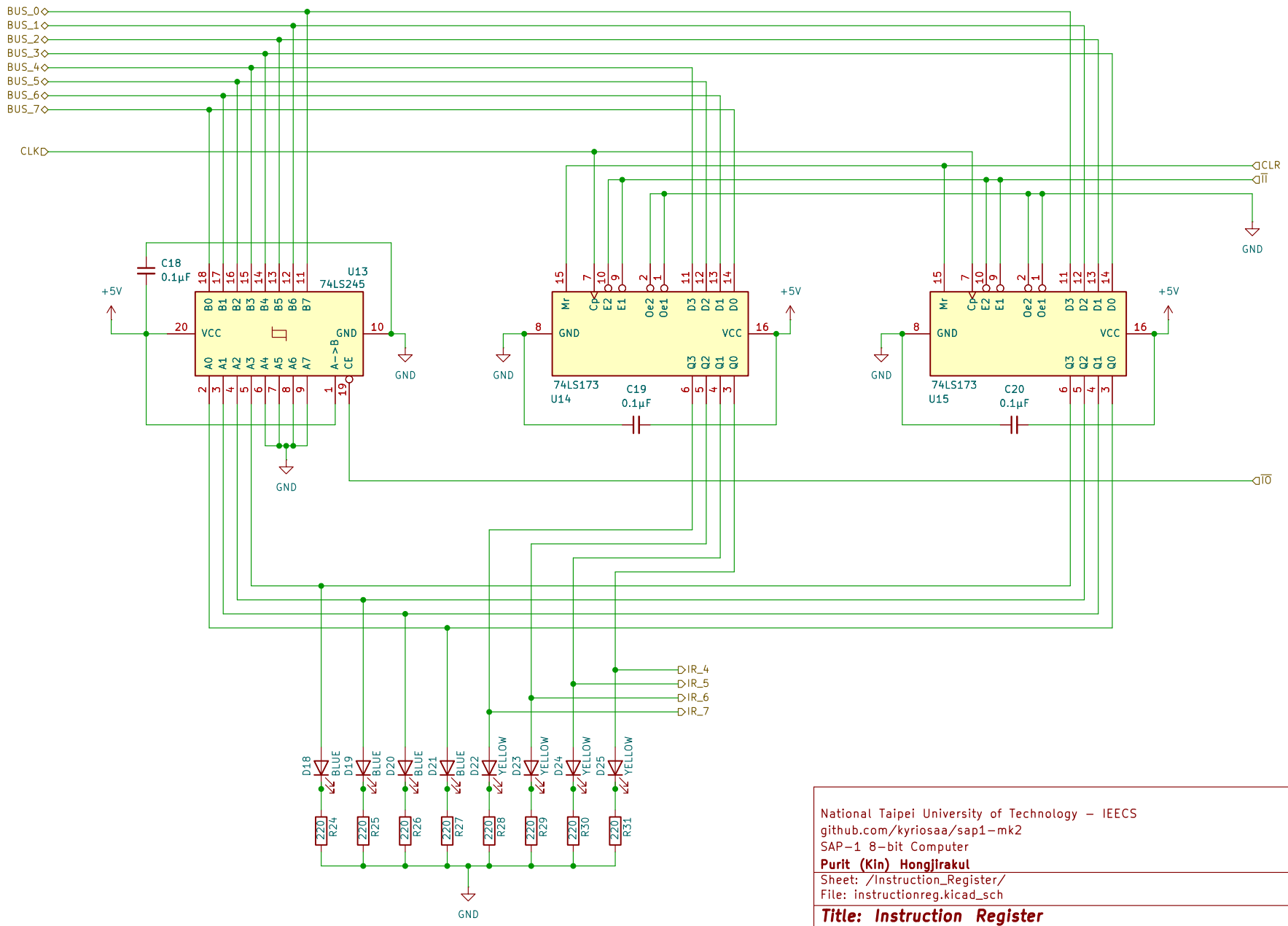

National Taipei University of Technology – IEECS
github.com/kyriosaa/sap1-mk2
SAP-1 8-bit Computer
Purit (Kin) Hongjirakul

Sheet: /Instruction_Register/
File: instructionreg.kicad_sch

Title: Instruction Register

Size: A4	Date: 2026-04-16	**Rev: 1.0**
KiCad E.D.A. 10.0.1		Id: 5/11

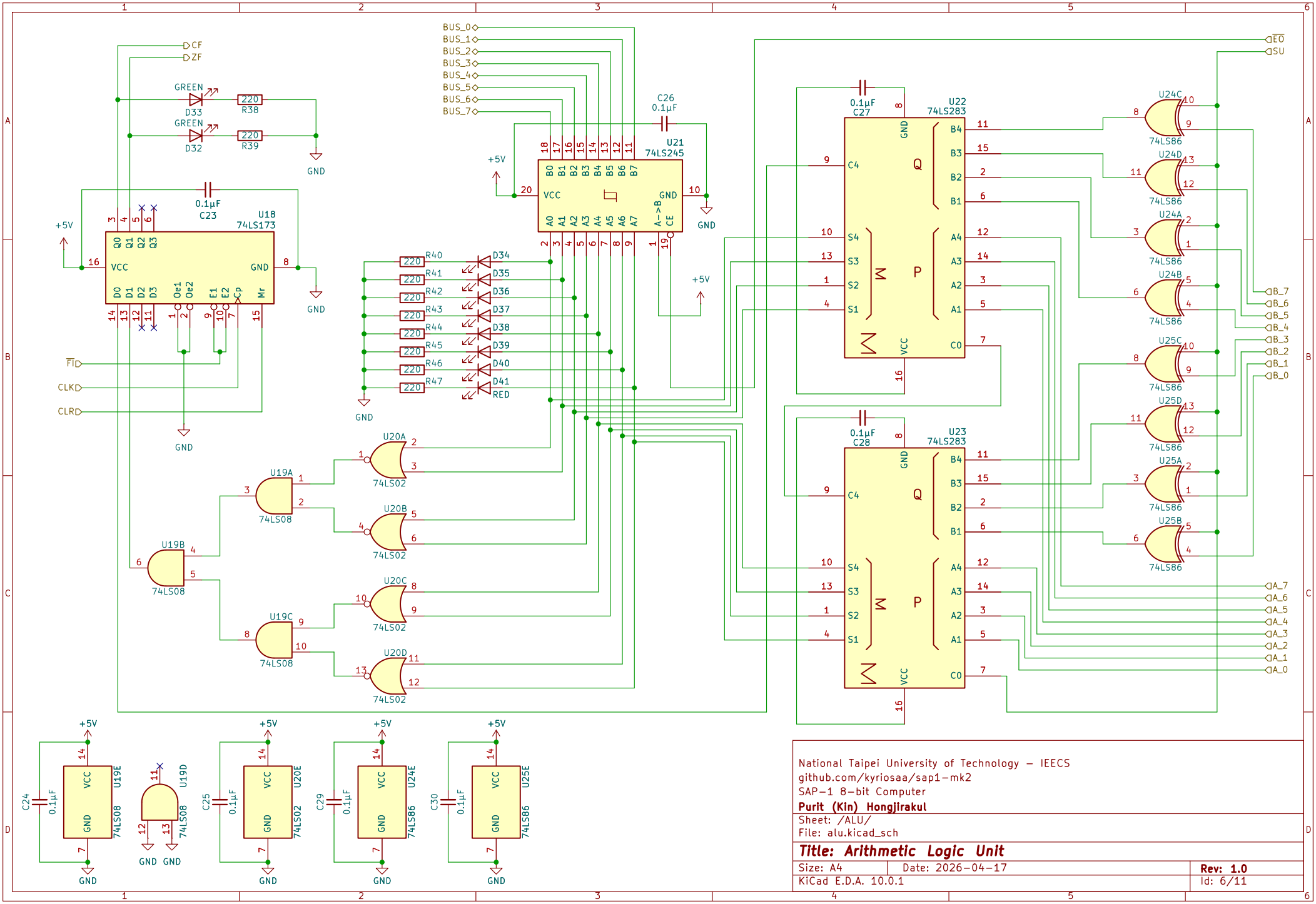
CF
ZF
GREEN
D33
R38
220
GREEN
D32
R39
220
GND
0.1µF
C23
U18
74LS173
+5V
VCC
GND
Q0 Q1 Q2 Q3
D0 D1 D2 D3
Oe1 Oe2
E1 E2
Cp
Mr
FI
CLK
CLR
BUS_0
BUS_1
BUS_2
BUS_3
BUS_4
BUS_5
BUS_6
BUS_7
C26
0.1µF
U21
74LS245
B0 B1 B2 B3 B4 B5 B6 B7
A0 A1 A2 A3 A4 A5 A6 A7
A->B
CE
R40
R41
R42
R43
R44
R45
R46
R47
D34
D35
D36
D37
D38
D39
D40
D41
RED
U20A
U20B
U20C
U20D
74LS02
U19A
U19B
U19C
74LS08
0.1µF
C27
U22
74LS283
C4
S4
S3
S2
S1
B4
B3
B2
B1
A4
A3
A2
A1
C0
0.1µF
C28
U23
74LS283
EO
SU
U24C
U24D
U24A
U24B
U25C
U25D
U25A
U25B
74LS86
B_7
B_6
B_5
B_4
B_3
B_2
B_1
B_0
A_7
A_6
A_5
A_4
A_3
A_2
A_1
A_0
C24
U19E
U19D
C25
U20E
C29
U24E
C30
U25E
National Taipei University of Technology – IEECS
github.com/kyriosaa/sap1-mk2
SAP-1 8-bit Computer
Purit (Kin) Hongjirakul
Sheet: /ALU/
File: alu.kicad_sch
Title: Arithmetic Logic Unit
Size: A4
Date: 2026-04-17
KiCad E.D.A. 10.0.1
Rev: 1.0
Id: 6/11

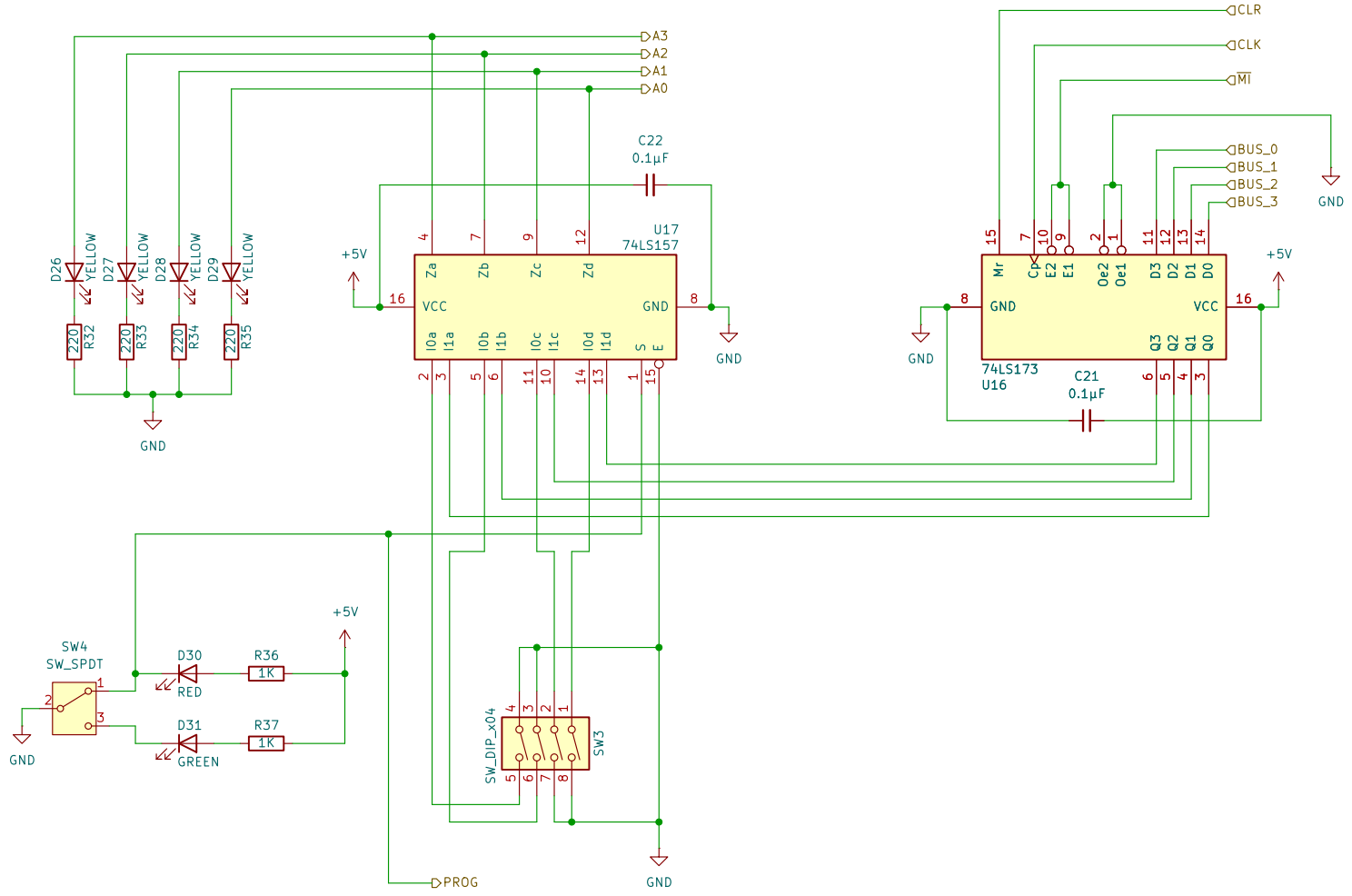

National Taipei University of Technology – IEECS
github.com/kyriosaa/sap1-mk2
SAP-1 8-bit Computer
Purit (Kin) Hongjirakul

Sheet: /MAR/
File: mar.kicad_sch

Title: Memory Address Register

Size: A4	Date: 2026-04-16	**Rev: 1.0**
KiCad E.D.A. 10.0.1		Id: 7/11

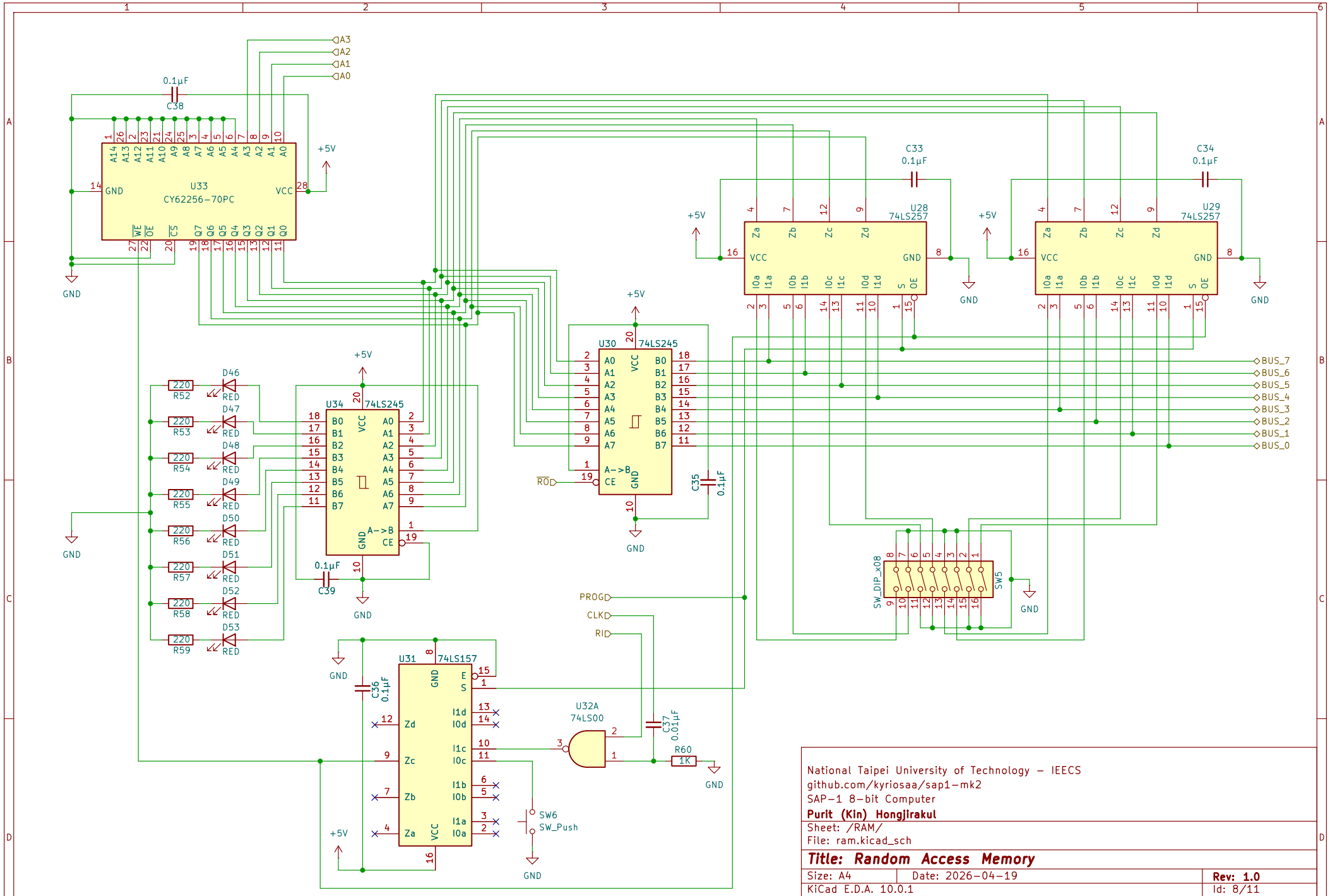

National Taipei University of Technology – IEECS
github.com/kyriosaa/sap1-mk2
SAP-1 8-bit Computer
Purit (Kin) Hongjirakul

Sheet: /RAM/
File: ram.kicad_sch

Title: Random Access Memory

Size: A4	Date: 2026-04-19	Rev: 1.0
KiCad E.D.A. 10.0.1		Id: 8/11

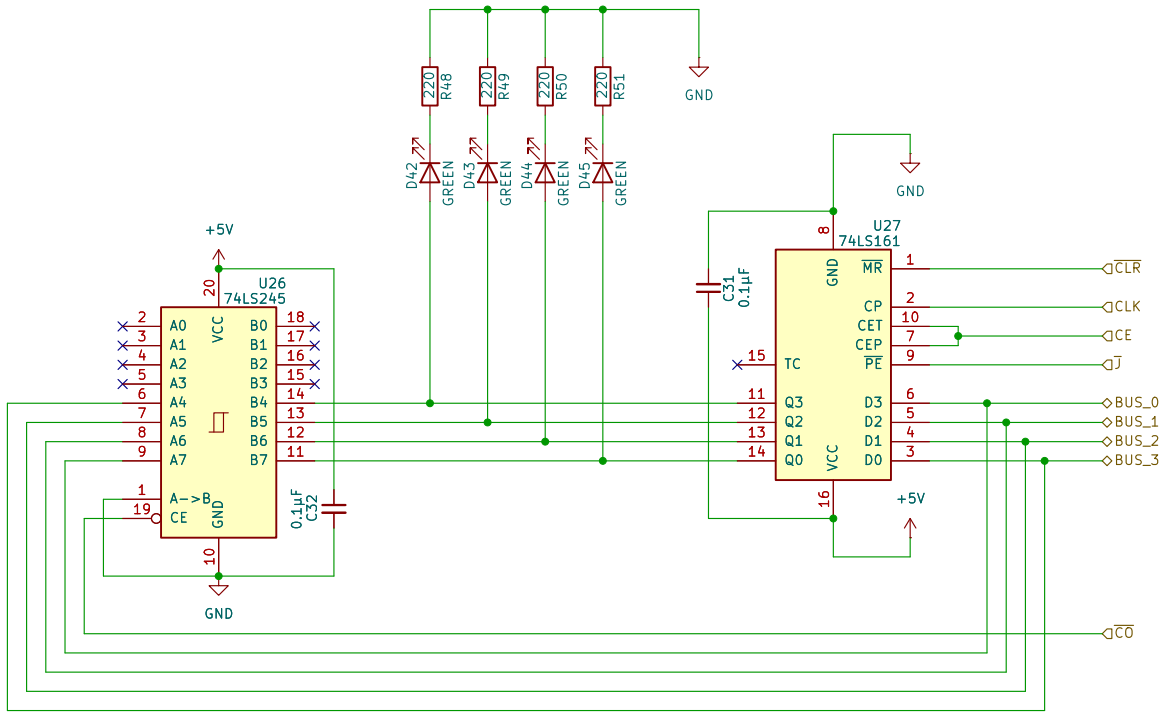

National Taipei University of Technology – IEECS
github.com/kyriosaa/sap1-mk2
SAP-1 8-bit Computer
Purit (Kin) Hongjirakul

Sheet: /Program_Counter/
File: progcounter.kicad_sch

Title: Program Counter

Size: A4	Date: 2026-04-17	**Rev: 1.0**
KiCad E.D.A. 10.0.1		Id: 9/11

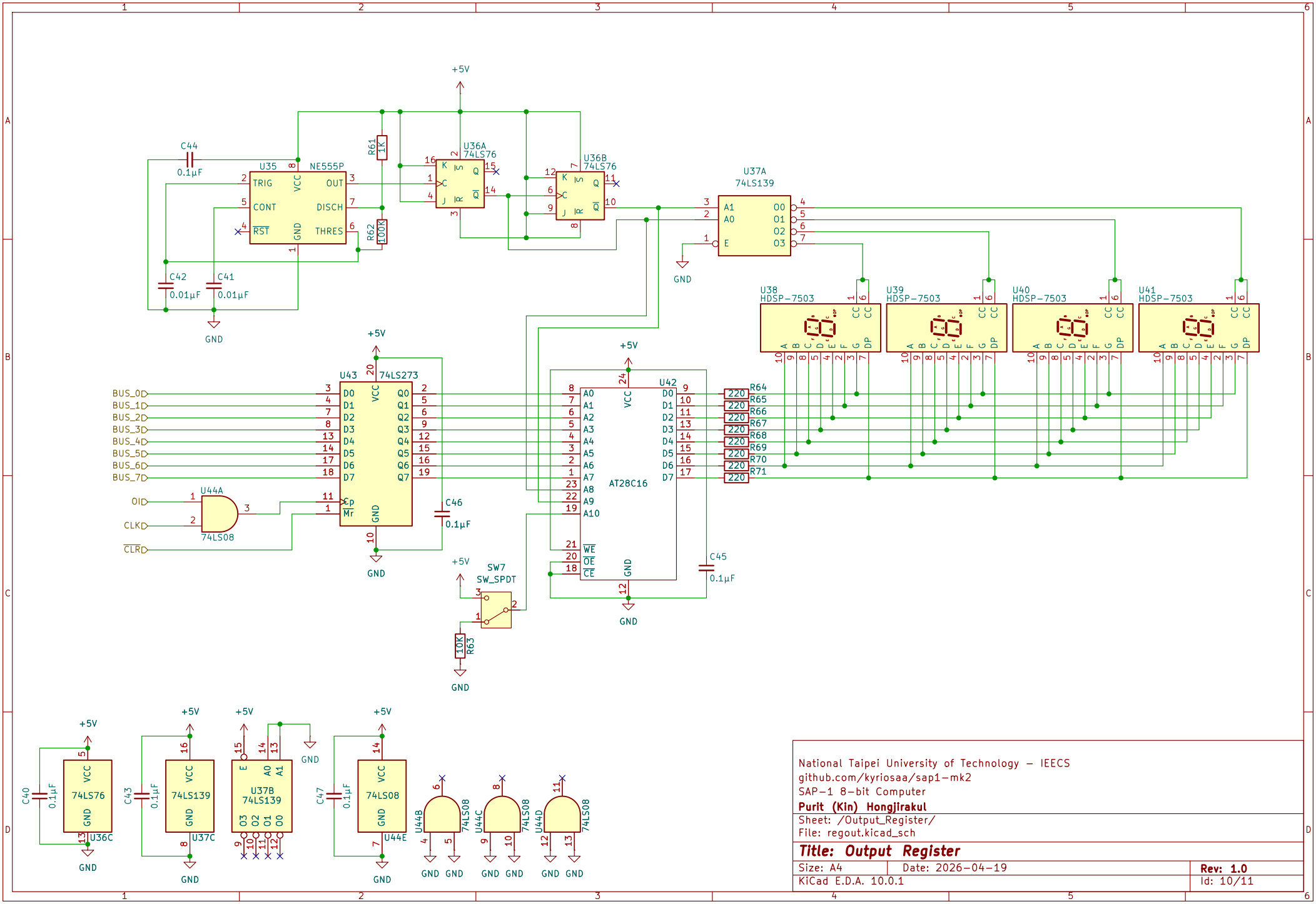

National Taipei University of Technology – IEECS
github.com/kyriosaa/sap1-mk2
SAP-1 8-bit Computer
Purit (Kin) Hongjirakul
Sheet: /Output_Register/
File: regout.kicad_sch

Title: Output Register

Size: A4	Date: 2026-04-19	**Rev: 1.0**
KiCad E.D.A. 10.0.1		Id: 10/11

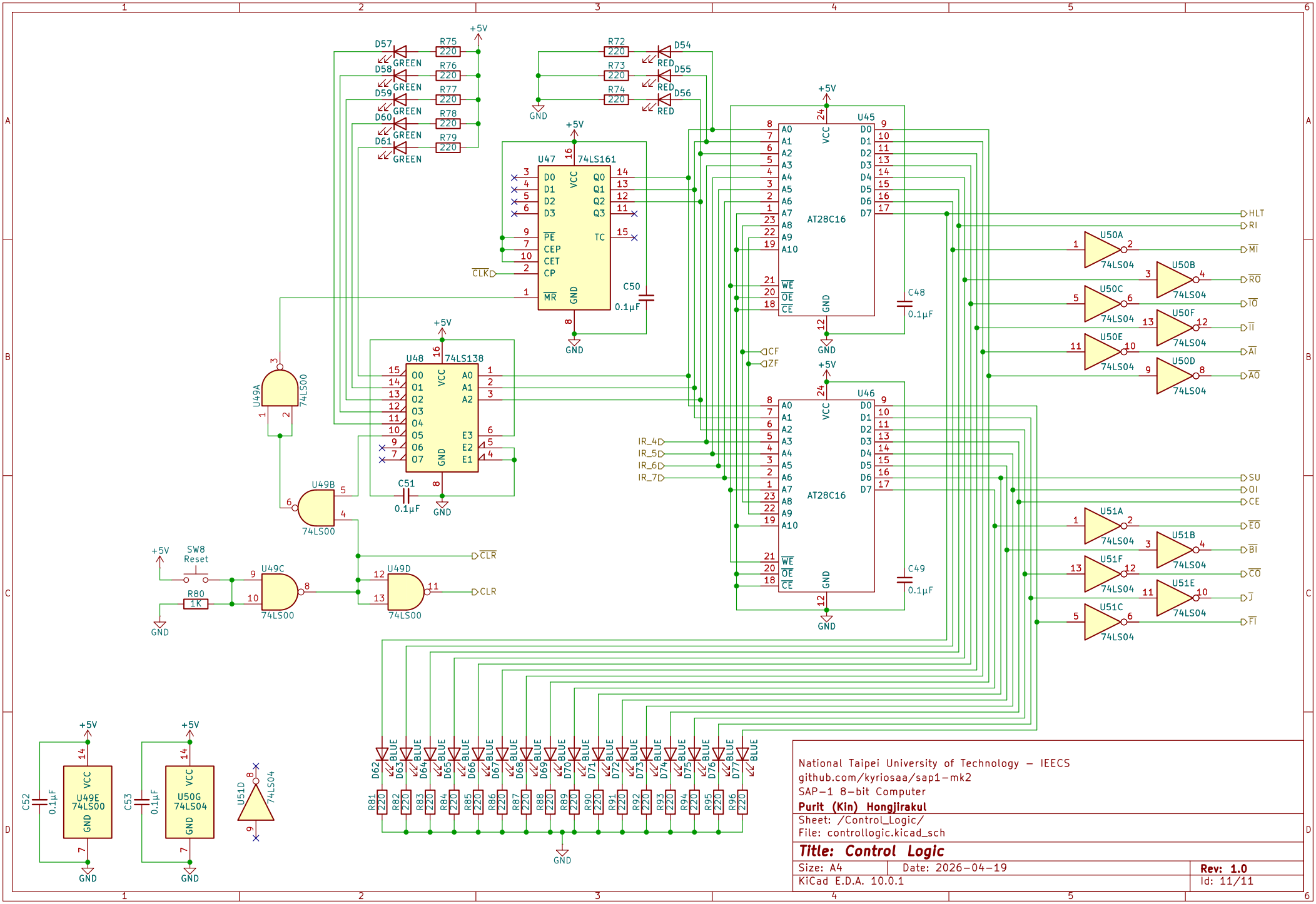
U47 74LS161
U48 74LS138
U45 AT28C16
U46 AT28C16
U49A 74LS00
U49B 74LS00
U49C 74LS00
U49D 74LS00
U49E 74LS00
U50A 74LS04
U50B 74LS04
U50C 74LS04
U50D 74LS04
U50E 74LS04
U50F 74LS04
U50G 74LS04
U51A 74LS04
U51B 74LS04
U51C 74LS04
U51D 74LS04
U51E 74LS04
U51F 74LS04
SW8 Reset
R80 1K
C50 0.1µF
C51 0.1µF
C48 0.1µF
C49 0.1µF
C52 0.1µF
C53 0.1µF
CLK
CLR
CF
ZF
IR_4
IR_5
IR_6
IR_7
HLT
RI
MI
RO
IO
II
AI
AO
SU
OI
CE
EO
BI
CO
J
FI
+5V
GND
National Taipei University of Technology – IEECS
github.com/kyriosaa/sap1-mk2
SAP-1 8-bit Computer
Purit (Kin) Hongjirakul
Sheet: /Control_Logic/
File: controllogic.kicad_sch
Title: Control Logic
Size: A4
Date: 2026-04-19
Rev: 1.0
KiCad E.D.A. 10.0.1
Id: 11/11