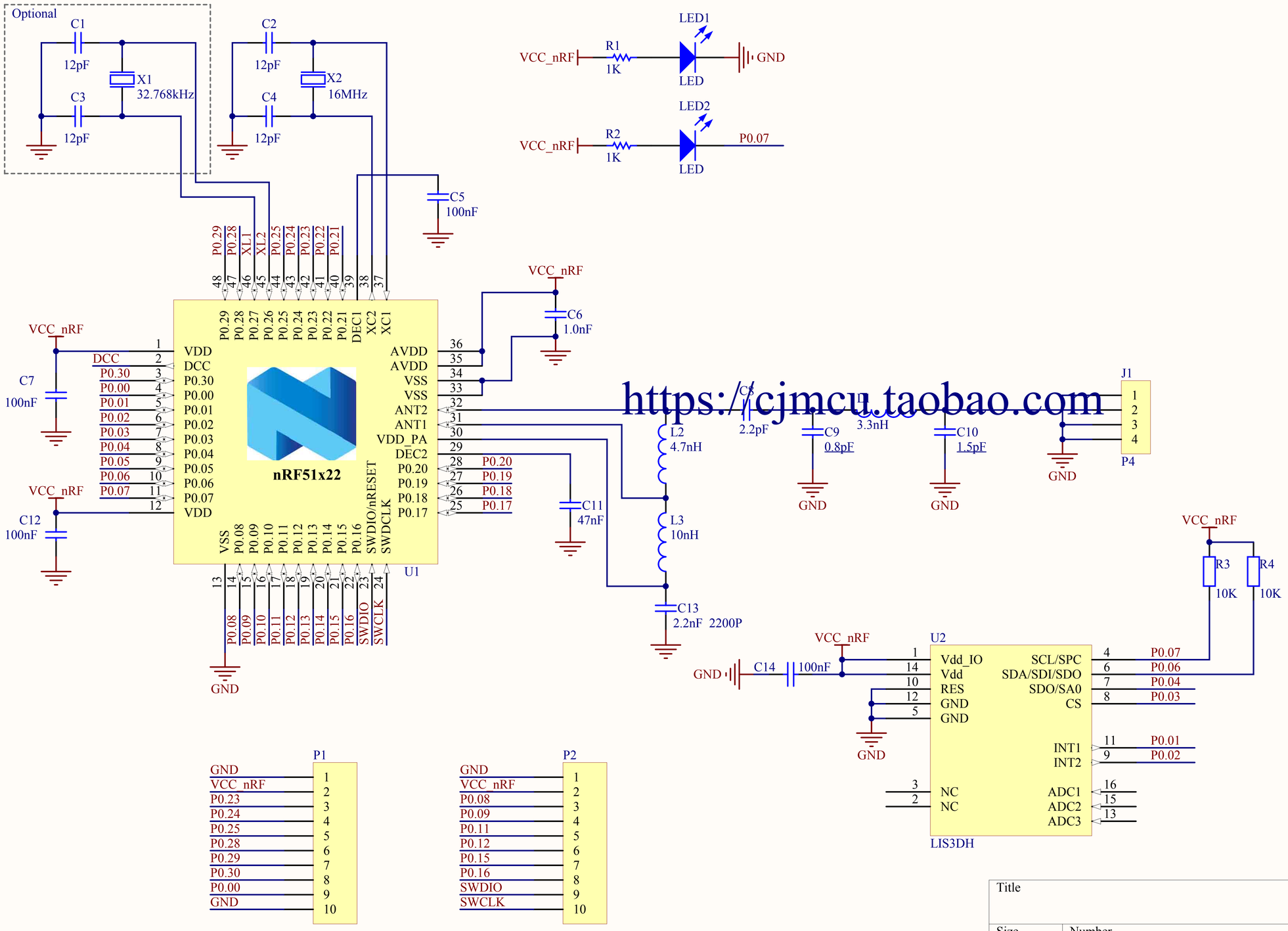

https://cjmcu.taobao.com

Title		
Size A4	Number	Revision
Date: 2016/8/13		Sheet of
File: M:\ \..\CJMCU-518223DH-V1.SCHDOC		Drawn By: